VapAir Seal™ MD Air and Vapor Barrier

Overview

VapAir Seal MD Air and Vapor Barrier is used for direct application over metal decks when insulation is to be mechanically fastened and is suitable for all internal conditions, including very high humidity. VapAir Seal MD air and vapor barrier is quick to install and creates an air- and vapor-tight seal. Its enhanced vapor resistance is sufficient to accommodate extreme internal conditions such as buildings containing wet industrial processes, breweries, swimming pools, sports halls, kitchens, and bathrooms, etc.

VapAir Seal MD consists of a reinforced composite aluminum foil with a tenacious self-adhesive SBS backing and removable poly release film.

Features and Benefits

- Self adhering
- Cold applied
- Creates an airtight and vapor-tight seal
- Extremely high tear resistance
- Withstand foot traffic on profiled metal decking, without puncturing
- Can be bonded with complete confidence at ambient temperatures of 30°F (-1°C) to 40°F (4°C) if material is kept above 50°F (10°C)
- Reduced fire load – has a calorific value of ≤ 10,500 kJ/m² and complies fully with fire protection requirements for reduced fire load vapor barriers – meets FM requirements
- Fully complies with FM Approval Standard Class No. 4470

Coverage Rate

Standard roll size of 42.5" wide x 131.23' long will cover approximately 458 ft².

*Effective coverage rate is 420 ft² after seaming.

Precautions

- Materials must be kept above 50°F.
- Rolls must be protected from long exposure to UV rays.
- Only use when insulation is mechanically fastened.
- Must be used on metal decking only.
- Sunglasses that filter ultraviolet light are strongly recommended as aluminum surfaces are highly reflective to sunlight. Roofing Technicians should dress appropriately and wear sunscreen protection.
- Primer is not required when applying MD to the metal deck substrate.
- It is recommended to use CAV-GRIP 3V, 702 or 702LV when temperatures are below 40°F. All other substrates must be primed.

Storage

- In their original packed condition, the rolls have a shelf life of 12 months. They should be stored upright in a cool, dry environment.
- VapAir Seal MD vapor barriers must be transported and stored on end, in their original packaging. Pallets are wrapped in a gray, light-reflecting, UV-protective plastic film. Rolls should remain under this cover until ready for use.
- When working in strong sunlight, it is important to ensure that rolls taken from the pallet are installed immediately. Rolls lefts on the pallet should remain under the above-mentioned protective cover until ready to be installed.

Temporary Roof

- VapAir Seal MD can be used as a temporary roof for up to 180 days.
- It is important to consider proper details when used as a temporary roof. (Refer to our Air and Vapor Barrier Field Guide for Detailing options and instructions).

VERSICO
ROOFING SYSTEMS

VapAir Seal MD Air and Vapor Barrier

Installation

1. Surface must be dry and clean from debris.
2. Primer is required on all substrates except for metal substrates.
3. Roll the VapAir Seal MD out flat, without creases.
4. Align and set the position.
5. Overlaps must be at least 2".
6. Remove the release film.
7. Press the sheet down uniformly using, for example, a wide broom. All laps must be rolled down using a hand roller.

8. On profiled decking, end laps in the VapAir Seal MD should be laid over with an additional strip of VapAir Seal MD or flat metal plate, approximately 6" wide, for support.

9. Any large gaps at angle change must be filled in with insulation to support membrane.

REVIEW CURRENT VERSICO SPECIFICATIONS AND DETAILS FOR SPECIFIC INSTALLATION REQUIREMENTS.

VERSICO
ROOFING SYSTEMS

VapAir Seal MD Air and Vapor Barrier

Internal Corners

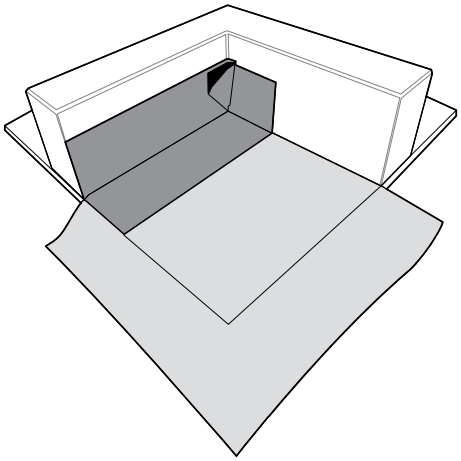

Apply the first flashing strip around the corner, forming an internal fold/pleat.

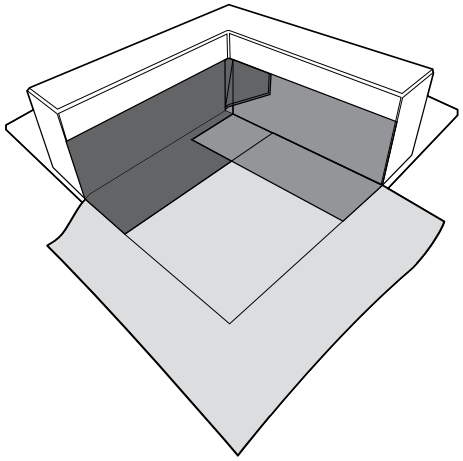

Apply the second flashing strip up to the corner. Adhere the fold/pleat onto the second strip.

External Corners

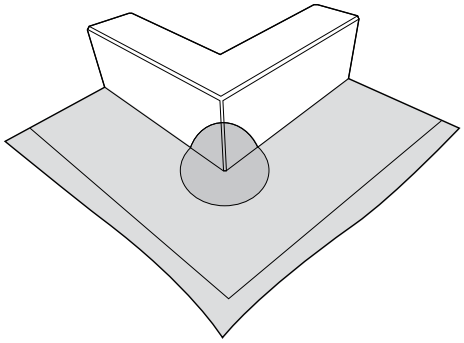

Adhere a rounded patch of VapAir Seal MD, approx. 7 ¾" in diameter, directly over the corner.

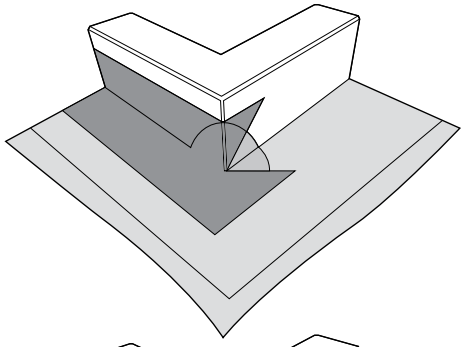

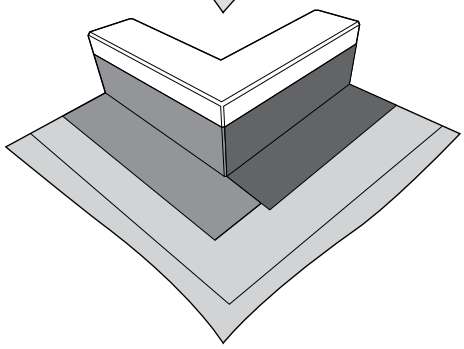

Press all creases down to achieve a tight seal.

Apply the first flashing strip beyond the corner, mitre at 45° and roll it down onto both surfaces.

Apply the second flashing strip up to the corner.

Note: Versico's Uncured EPDM Flashing may be used to complete flashing details.

VERSICO
ROOFING SYSTEMS

VapAir Seal MD Air and Vapor Barrier

Pipe Penetrations

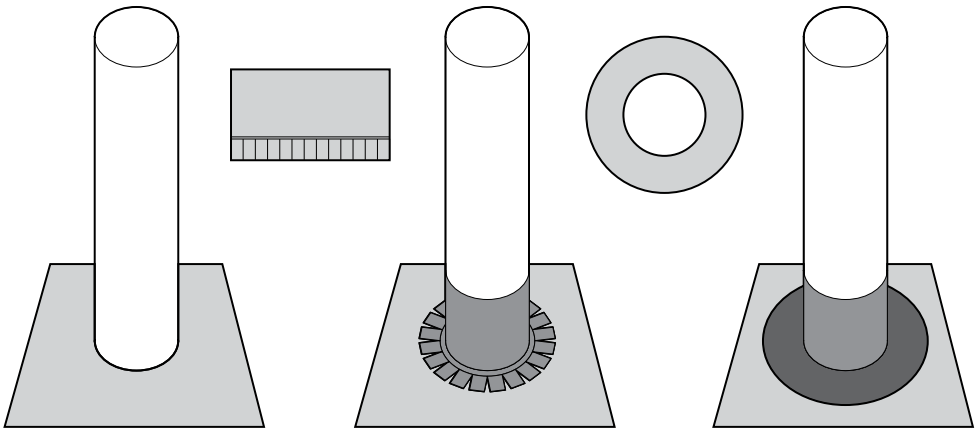

Cut the flashing strip into a series of 'tongues' (approx. 1 ¼" wide). Take the strip around the pipe and press the tongues down onto the roof surface.

Pull a 'ring' flashing over the pipe and roll it down to the substrate, making sure it encapsulates the tongues.

Typical Properties and Characteristics

Physical Property	Standard	Typical
Overall Thickness	ASTM D5147	.015"
Weight	EN 1849-2	0.15 lb/sf
Rolls per Pallet		24 rolls
Roll Length		131.23'
Roll Width		42.5"
Tensile Strength	ASTM D412	250 psi
Elongation	ASTM D1970	330%
Low Temperature Flexibility	ASTM D1970	-20°C
Air Permeance	ASTM E2178 ASTM E2178 Assembly (1 fastener/SF)	0.000 L*m²@75 Pa @75 PA 0.0027 cfm/FT²
Hydrostatic Pressure Test (water column 2 m high for 15 mins)	AATCC 127	Pass
Peel Adhesion	ASTM D903	14 lb
Water Vapor Permeability sd-value	ASTM E96 D1970	.03 perms
Water Vapor Resistance	BS EN ISO 12572	4,310 MNs/g
Tear Strength	ASTM D1970	135 lbf
Puncture Resistance	ASTM D5602	54.6 lb
Calorific Value	DIN 51900-1	≤10,500 kJ/m²

Typical properties and characteristics are based on samples tested and are not guaranteed for all samples of this product. This data and information is intended as a guide and does not reflect the specification range for any particular property of this product.

Ratings and Certifications

Physical Property	Standard	Results
FM Approval	FM Standard Class No. 4470	Class 1

Green Building Information

Pre-Consumer Recycled Content	0%
Post-Consumer Recycled Content	0%
Solar Reflectance Index (SRI)	N/A
Global Warming Potential (GWP)	Currently Unavailable
Volatile Organic Compounds (VOC) Content	N/A
Manufacturing Location(s)	Germany
Corporate Sustainability Report (CSR) Availability	Yes
Environmental Product Declaration (EPD) Availability	No

Packaging

Product	VapAir Seal MD Direct to Metal Deck Air/Vapor Barrier
Size/Weight	42.5" x 131' / 71 lbs
Actual Coverage Rate	458 ft²
Part Number	321931

VERSICO ROOFING SYSTEMS

A SINGLE SOURCE FOR SINGLE-PLY ROOFING

800.992.7663 • www.versico.com

© 2025 Versico. Printed in U.S.A.
VE-4462 - "VapAir Seal MD Technical Data Bulletin" - 12.18.25

Versico and the Versico logo are trademarks of Versico. VapAir Seal is a trademark of Carlisle Construction Materials, LLC.
LEED is a registered trademark of the U.S. Green Building Council.