VERSICO
ROOFING SYSTEMS

SPECIFICATIONS & DETAILS

INDEX

January 2024

SELECT THE ROOF SYSTEM TO VIEW SPECIFICATIONS & DETAILS

Fully Adhered, Ballasted and Mechanically Attached

EPDM ROOFING SYSTEMS

Mechanically Attached and Fully Adhered Roofing Systems

VERSIWELD TPO

Mechanically Attached and Fully Adhered Roofing Systems

VERSIFLEX PVC

Fully Adhered and Mechanically Fastened Roofing System

VERSIFLEECE ROOFING SYSTEMS

VERSIFLEECE AC ROOFING SYSTEMS

VERSICO ROOFING SYSTEMS

TABLE OF CONTENTS

JANUARY 2024

EPDM Roofing Systems
VersiGard EPDM Three-Part Specifications 5
VersiGard EPDM Details 67

TPO Roofing Systems
VersiWeld TPO Three-Part Specifications 155
VersiWeld TPO Details 226

PVC Roofing Systems
VersiFlex PVC Three-Part Specifications 292
VesiFlex PVC Details 352

VERSIFLEECE TPO, PVC AND KEE HP Fully Adhered and Mechanically Fastened Roofing Systems
VERSIFLEECE Three-Part Specifications 410
VERSIFLEECE Details 483

VERSIFLEECE AC Three-Part Specifications 511
VERSIFLEECE AC Details 551

Versico Spec Supplements 577

Versico Design References 751

EPDM ROOFING SYSTEMS

VERSIGARD EPDM

Fully Adhered, Ballasted and Mechanically Attached

January 2024

Part I-General
1.01 Description 3
1.02 General Design Considerations 4
1.03 Quality Assurance 5
1.04 Submittals 6
1.05 Warranty 7

Warranty Tables
TABLE I – Non-Reinforced EPDM Membrane Thickness for Various Warranty Options 8
TABLE II – Reinforced EPDM Membrane Thickness for Various Warranty Options 9
TABLE III – Mechanically Fastened Roofing Systems – Up to 20 YR Warranty – Steel/Concrete Decks 10
TABLE IV – Mechanically Fastened Roofing Systems – Up to 20 YR Warranty – Wood Decks 11
TABLE V- Re-Roofing Substrate Criteria – Up to 20 YR Warranty 11
TABLE VI –Adhered Roofing Systems – Underlayment Fastening Criteria – Up to 20 YR Warranty 12
TABLE VII- Underlayment/Insulation & Required Attachment Assemblies – Up to 20 Year Warranty for QA EPDM 14
1.06 Job Conditions 15
1.07 Product Delivery, Storage and Handling 16

Part II – Product
2.01 General 17
2.02 Membrane 17
2.03 Insulation/Underlayments 20
2.04 Related Materials 25
2.05 Fastening Components 27
2.06 Insulation Securement Adhesive 28
2.07 Vapor/Air Barrier 29
2.08 Edges and Terminations 30
2.09 Roof Walkways 30
2.10 Other Versico Accessories 31

Part III – Execution – Fully Adhered, Ballasted and Mechanically Attached
3.01 General 31
3.02 Roof Deck/Substrate Criteria 31
3.03 Insulation/Underlayments 34
3.04 Insulation Attachment 34
3.05 Membrane Placement and Securement 36
3.06 Flashing 46
3.07 Roof Walkways 47
3.08 Daily Seal 47
3.09 Optional Color Coating 47
3.10 Clean Up 47

ATTACHMENTS
"Attachment I" – Ballast Criteria and Walkways – Design "B" Ballasted 49
"Attachment II" – 25/30 Year Warranty Design Enhancements 53
Installation Details 63

Note: In addition to information listed in this section Specifiers and Authorized Contractors should reference Spec Supplement and Design Reference Sections for other pertinent information.

VERSICO ROOFING SYSTEMS

This page intentionally blank

VersiGard® EPDM Roofing Systems
Fully Adhered, Ballasted and Mechanically Attached

January 2024

The information contained in this generic specification represents a part of Versico's requirements for obtaining a roofing systems warranty. Construction materials and practices, building siting and operations, climatic conditions, and other site-specific factors will have an impact on the performance of the roofing system. Versico recommends that the building owner retain a design professional to determine appropriate design measures to be taken in order to address these factors.

This section is to serve as criteria for Specifiers and Authorized Contractors regarding the design and installation of Versico's Design "A" Fully Adhered, Design "B" Ballasted and Mechanically Attached EPDM Membrane Roofing Systems. Additional information essential for the design and installation of the roof system mentioned herein are also included in the Design Reference Section and also listed in the form of a Specification Supplement at the end of the Technical Manual. Specifiers and Authorized Contractors are advised to reference all applicable sections.

Various Warranty Tables have been included in Paragraph 1.05 citing various requirements by which specific warranty coverage can be obtained. Appropriate Warranty Table should be referenced to ensure proper warranty coverage.

PART I – GENERAL

1.01 Description

A. **The Design "A" Fully Adhered Roofing System** incorporates **VersiGard (black on white) 60- or 90-mil thick non-reinforced EPDM or VersiGard Gray 60-mil thick non-reinforced or VersiGard WHITE (white) 60-mil thick reinforced or VersiGard Black 45-,60- or 75-mil reinforced EPDM** membrane. An acceptable insulation is mechanically attached to the roof deck or Fully Adhered with Versico supplied urethane-based insulation adhesive or hot asphalt and the EPDM membrane is Fully Adhered to the insulation with Versico's EPDM Bonding Adhesive (Versico's G200SA Substrate Adhesive, Low-VOC Bonding Adhesive, CAV-GRIP 3V or Versico Water Based Adhesive). Adjoining sheets of EPDM membrane are spliced together using 3" or 6" wide QA Seam Tape and Primer or factory-applied QA Seam Tape (VersiGard QAT) and Primer. There are no maximum slope restrictions for the application of this roofing system.

Note: When non-reinforced EPDM membrane is used, Versico recommends a minimum of 60-mil thick material. VersiGard 45-mil non-reinforced EPDM may be utilized when specified or required by the owner or owner's representative.

Water based adhesive may be used for projects with 20-year maximum warranty and wind speed coverage up to 72 mph.

B. **The Design "B" Loose Laid Ballasted Roofing System** incorporates minimum 45-mil thick VersiGard Black **non-reinforced** or minimum 60-mil **reinforced** EPDM membrane. Both the EPDM membrane and an acceptable membrane underlayment or insulation are loose laid over the substrate and held in place with a minimum of 10 pounds or ballast per square foot depending upon wind load requirements. Adjoining sheets of EPDM membrane are spliced together using 3" or 6" wide QA Seam Tape and Primer or factory-applied QA Seam Tape (VersiGard QAT) and Primer. The maximum roof slope for this roofing system is 2" to one horizontal foot.

C. **The Mechanically Attached Roofing System** incorporates 45-, 60- or 75-mil VersiGard Black **reinforced** EPDM membrane or **VersiGard WHITE (white) 60-mil thick reinforced** EPDM membrane. An acceptable insulation is Mechanically Attached to the roof deck and, depending on project criteria; the reinforced membrane is Mechanically Attached with the appropriate Versico Fastener and 2" or 2-3/8" diameter Fastening Plates (Polymer Seam Plates required over steel deck) or Fastening Bars at 6" minimum to 12" maximum along the center of the membrane splice.

Adjoining sheets of EPDM membrane are spliced together using 6" Factory-Applied QA Seam Tape (VersiGard QAT) and Primer or QA Seam Tape and Primer. Field membrane sheets are either 5', 6.5', 8' or 10' wide depending upon wind load requirements, building height and type of roof deck. At the roof perimeter, a heavier fastening density is required utilizing 5', 6.5' wide sheets or 9" wide Quick-Applied RTS (Reinforced Termination Strip). The maximum roof slope for this roofing system is 18' in one horizontal foot.

The roofing system can also be specified over an existing standing seam, flat seam or corrugated metal roof with the membrane secured to the structural purlins. Refer to the Metal Retrofit System Specifications and Details.

NOTE: The selection of various components (i.e. insulation, underlayment, membrane thickness, etc.) may vary depending on desired warranty coverage. Refer to appropriate Warranty Tables listed in Paragraph 1.05.

Assemblies with membrane fasteners 12" or longer must be submitted for Versico's review to ensure adequate securement due to the possibility of increased dynamic fastener movement. Such assemblies when accepted may require the use of additional insulation fasteners and the use of 1/2" SecurShield HD Recover Board.

1.02 General Design Considerations

A. Projects where wind speed coverage greater than 55 mph is specified or those with a 20-year or longer Total System Warranty will require additional enhancements beyond those outlined in this section. Prior to installation, refer to Warranty Tables in Paragraph 1.05.

B. Petroleum based products; certain chemicals and waste products (i.e., grease, oil, animal fats, etc.) are not compatible with these roofing systems. Versico should be contacted for verification or compatibility and recommendations concerning an acceptable roofing assembly.

C. It is the responsibility of the Specifier to review local, state and regional codes to determine their impact on the specified Versico Roofing System.

D. It is the responsibility of the building owner or his/her designated representative to verify structural load limitation. In addition, a core cut may be taken to verify weight of existing components when the roofing system is to be specified on an existing facility.

E. Coordination between various trades is essential to avoid unnecessary rooftop traffic over completed sections of the roof and to prevent subsequent damage to the membrane roofing system.

F. Concentrated loads from rooftop equipment may cause deformation of insulation/underlayment and possible damage to the membrane if proper protection is not provided. A protection course or sleepers must be specified.

G. Drainage

1. Drainage must be evaluated by the Specifier in accordance with all applicable codes. Slope may be provided by tapering the structure or through the use of tapered insulation; a sufficient number of roof drains should also be specified and properly located to allow for positive drainage. Significant ponding that could remain after 48 hours should be eliminated with the addition of auxiliary drains in low areas where ponding is anticipated.

   Versico specifically disclaims responsibility for the design and selection of an adequate drainage system and drain accessories. Selection must be made by the building owner or the owner's design professional.

2. Small incidental areas of ponded water will not impact the performance of this roofing system; however, in accordance with industry standards, the roofing assembly **should be designed to prevent ponding** of water on the roof for prolonged periods (longer than 48 hours). Good roofing practice dictates proper drainage to prevent possible excessive live loads and, in the event of a roof leak, to minimize potential interior damage to the roofing assembly and to the interior of the building.

3. **Tapered edge strips, crickets or saddles** are recommended where periodic ponding of water may occur. When the slope of the taper exceeds 2" to one horizontal foot additional membrane securement at the base of the tapered edge strip, cricket or saddle will be required.

4. On **VersiGard White EPDM Roofing Systems,** a slope greater than 1/8" per horizontal foot is recommended to serve the long-term aesthetics.

H. On new construction projects, especially in cold climate regions, moisture generated due to the construction process could adversely impact various components within the roofing assembly if not addressed. Refer to **Design Reference DR-01-21 "Construction Generated Moisture"** included in the Versico Technical Manual.

I. Vapor Retarders

1. Versico does not require a vapor retarder for the protection of the membrane; however, it should be considered by the specifier for the protection of the roofing assembly (i.e. primarily insulation, underlayment and adhesives). The following criteria should be considered by the specifier:

2. Use of a vapor retarder to protect insulation and reduce moisture accumulation within an insulated roofing assembly, should be investigated by the specifier.

3. In the generally temperate climate of the United States, during the winter months, water vapor flows upward from a heated, more humid interior toward a colder, drier exterior. Vapor retarders are more commonly required in northern climates than in southern regions, where downward vapor pressure may be expected and the roofing membrane itself becomes the vapor retarder.

J. On structural concrete decks, when a vapor retarder is not used, gaps in the deck along the perimeter and around penetrations must be sealed along with vertical joints between tilt-up panels, if present, to prevent infiltration of hot humid air and possible moisture contamination resulting from condensation. This is specifically important when adhesive is used to attach the roof insulation.

NOTE: If left unaddressed, collected moisture could weaken insulation boards and facers resulting in a blow-off or increase the probability of mold growth.

K. **Retrofit- Recover Projects** (when the existing roofing material is left in place)

1. The removal of existing wet insulation and membrane must be specified. The Specifier shall select an appropriate and compatible material as filler for voids created by removal of old insulation or membrane.

2. A core cut should be taken to verify weight of existing components when the roofing system is to be specified over an existing roofing assembly.

3. Entrapment of water between the old and new membrane can damage and deteriorate new insulation/underlayment between the two membranes. If a vapor retarder or air barrier is not specified, Versico recommends the existing membrane be perforated to avoid potential moisture accumulation and to allow the detection of moisture to enable the building owner to take corrective action. This can be accomplished by drilling approximately ¾" diameter holes every 100 square feet in the existing built-up roof or single-ply membrane (excluding PVC membrane).

4. Existing PVC membrane must be totally removed or the existing membrane must be cut into maximum 10' by 10' sections. All PVC flashings at the perimeter, roof drains and roof penetrations must be removed.

L. **Optional Color Coating**

1. Versico X-Tenda Coat is recommended for color coating the EPDM membrane and flashing when required by the Specifier. Available in white or gray.

   X-Tenda Coat can also be specified as a "Restoration System" when applied to an existing Versico EPDM membrane system that may qualify for a 5- or 10-year Coating System Warranty. Refer to Versico's published X-Tenda Coat Specification for specific requirements.

NOTE: Versico may be contacted for other optional color coatings.

1.03 Quality Assurance

Building codes are above and beyond the intended purpose of this specification. The building **owner, owner's representative** or **Specifier** should verify local codes for applicable requirements and limitations. It is the responsibility of the specifier to review local, state and regional codes to determine their impact on the specified Versico Roofing System.

NOTE: For code approvals achieved with the Versico EPDM Roofing Systems, refer to the Versico EPDM Code Approval Guide, DORA (Directory of Roof Assemblies), Factory Mutual (FM) Approval Guide or Underwriters Laboratories (UL) Fire Resistance or Roofing Materials and Systems Directories.

A. When recovering or retrofitting an existing roof system, the addition of new insulation (type and thickness) may alter the fire performance characteristics of the assembly. Building owners or their designated representatives shall consult the local code enforcement agency to avoid potential code violation.

B. Versico recommends the use of Versico supplied products for use with these Versico Roofing Systems. The performance or integrity of products by others, **when selected by the specifier and accepted as compatible by Versico,** is not the responsibility of Versico and is **disclaimed** by the Versico Warranty.

C. The specified roofing system must be installed by a Versico Authorized Roofing Contractor in compliance with drawings and specifications as approved by Versico.

D. Provide polyisocyanurate insulation that meets PIMA Quality Mark Certified LTTR value through third party verification meeting ASTM C 1289, Type II, Class 1, Grade 2.

E. There must be no deviations made from Versico's specification or Versico's approved shop drawings without the **PRIOR WRITTEN APPROVAL** of Versico.

F. After completion of the installation, upon request, an inspection shall be conducted by a Field Service Rep (FSR) of Versico to ascertain that the membrane roofing system has been installed according to Versico's published specifications and details applicable at the time of bid. This inspection is to determine whether a warranty shall be issued. It is not intended as a final inspection for the benefit of the owner.

G. For ballasted, 30-year warranty projects, the applicator must submit pictures showing the use of EPDM Primer for perimeter Quick-Applied RTS (Reinforced Termination Strip) securement or allow random test cuts to confirm the use of EPDM Primer.

1.04 Submittals

A. To ensure compliance with Versico's minimum warrant requirements, the following projects should be forwarded to Versico for review prior to installation, preferably prior to bid.

1. Air pressurized buildings, canopies, and buildings with large openings where the total wall openings exceed 10% of the total wall area on which the openings are located (such as airport hangars, warehouses and large maintenance facilities). Refer to Attachment IV at the end of this section for perimeter considerations, when a Mechanically Attached System is specified.
2. Cold storage buildings are freezer facilities.
3. Design "A" Fully Adhered Roofing System projects over 250' in height (Up to 15 YR warranties) and over 100' in height (Warranties greater than 15 YR).
4. Design "B" Ballasted Roofing System projects over 75' in height.
5. Mechanically Attached Roofing System projects over 100' in height.
6. Projects where the EPDM is expected to come in direct contact with petroleum-based products, waste products (i.e., grease, oil, animal fats, etc.) and other chemicals.
7. Projects where hot asphalt is specified for insulation attachment.
8. Mechanically Attached projects specified with a fastener length exceeding 12".

B. Shop drawings must be submitted to Versico by the Versico Authorized Roofing Contractor along with a completely executed Copy-A Job Approval Request for approval. Approved shop drawings are required for inspection of the roof and on projects where on-site technical assistance is requested.

Shop drawings must include:

1. Outline of roof and size
2. Deck type (for multiple deck types)
3. Location and type of all penetrations
4. Perimeter and penetration details
5. Key plan (on multiple roof areas) with roof heights indicated
6. Sheet width and number of perimeter sheets for Reinforced Mechanically Attached Systems
7. Versico Fastener type, length and maximum spacing (for membrane securement) for Reinforced Mechanically Attached systems.

C. **Along with the project submittals** (shop drawings and Request for Warranty), the roofing contractor must include pullout test results when the results are below the requirements identified in the Table included in **Design Reference DR-06-19 "Withdrawal Resistance Criteria"**.

D. Ballasted projects incorporating a **lightweight insulating concrete** substrate, a **certification letter** is **required** from the lightweight insulation concrete manufacturer for the following conditions:

1. The membrane is specified directly over **vermiculite** or **cellular** lightweight insulation concrete with a maximum compressive strength of 140 psi.

2. The membrane is specified with Versico's Protective Mat as the membrane underlayment over **vermiculite** or **cellular** lightweight insulation concrete with a compressive strength between 140-175 psi.

The certification letter must reference the project name and location, accompany the project submittals (shop drawing and Request for Warranty) and contain the following information pertaining to the lightweight insulation concrete mix design:

1. Manufacturer's brand name
2. Maximum compressive strength
3. Average wet density
4. Average air dry density

E. When field conditions necessitate modifications to the originally approved shop drawings, a copy of the shop drawings outlining all modifications must be submitted to Versico for revision and approval prior to inspection and warranty issuance.

F. **As-Built Projects** (roofing systems installed prior to project approval by Versico)
The Versico Authorized Contractor may supply Versico with an As-Built drawing for a project completed prior to Versico's approval. The As-Built drawings:

1. Must conform to Versico's most current published specifications and details applicable at the time of bid.
2. Must be submitted along with a completely executed Copy-B Job Completion form.
3. Must include the items identified in Paragraphs B, C and D above.

Note: As-Built projects are not recommended for those projects referenced in Paragraph A in order to ensure Versico warranty requirements have been met.

G. **Copy-B Job Completion**

After project completion, a Copy-B Job Completion date must be submitted to Versico to schedule the necessary inspection and acceptance of the project prior to issuance of the Versico warranty.

1.05 Warranty

A. A Total System Warranty is available for roofing systems on commercial buildings within the United States and applies only to **products manufactured or marketed by Versico**. The total system is defined as membrane, flashings, adhesives, sealants and other Versico brand products utilized in the installation. For a complete description of these products, refer to the Part 2 "Products" Section included in this Specification and **Spec Supplement "Related Products" P-01-22.**

B. **See Tables Below for information regarding Warranted Systems and Design Criteria:**

1. **TABLE I – Non-Reinforced EPDM Membrane Thickness for Various Warranty Options** Identifies minimum membrane thickness for non-reinforced membranes used in Fully Adhered or Ballasted roofing systems.

2. **TABLE II – Reinforced EPDM Membrane Thickness for Various Warranty Options** Identifies minimum membrane thickness required for Fully Adhered and Mechanically Attached assemblies using reinforced membrane.

3. **TABLE III – Mechanically Fastened Roofing Systems - Membrane Fastening Criteria – Up to 20 YR Warranty - Steel/Concrete Decks** Identifies fastening density, field membrane width and number perimeter sheets required for the various wind zones. The assemblies are categorized based on various building height and specific wind speed warranty coverage.

4. **TABLE IV – Mechanically Fastened Roofing Systems - Membrane Fastening Criteria – Up to 20 YR Warranty - Wood (Plywood & OSB) Deck** Identifies fastening density, field membrane width and number perimeter sheets required for the various wind zones. The assemblies are categorized based on various building height and specific wind speed warranty coverage.

5. **TABLE V – Re-roofing Substrate Criteria - Up to 20 YR Warranty** Identifies required substrates for re-roofing applications for Fully Adhered, Mechanically Attached and Ballasted roofing systems.

6. **TABLE VI – Adhered Roofing Systems - Underlayment Fastening Criteria - Up to 20 YR Warranty** Identifies required underlayment for Fully Adhered roofing systems with warranties up to 20 years based on the various wind speed coverage available. The Table also identifies fastening density of adhesive bead spacing and required edge terminations.

7. **TABLE VII – Underlayment/Insulation & Required Attachment Assemblies - Up to 20 YR Warranty for QA EPDM Adhered Roofing Systems** Identifies required underlayment for QA EPDM Fully Adhered roofing systems with warranties up to 20 years based on the various wind speed coverage available. The Table also identifies fastening density of adhesive bead spacing and required edge terminations.

Table I **Non-Reinforced EPDM Membrane Thickness for Various Warranty Options**

VERSIGARD OR VERSIGARD WHITE NON-REINFORCED MEMBRANES - ADHERED					
Warranty Duration	Warranty Wind Speed Coverage			Minimum Membrane Thickness	Hail Coverage
	55, 72 or 80 mph	90 to 100 mph	110 to 120 mph		*(Cover Board set in Adhesive)
5,10, or 15 year	√	√	√	60-mil VersiGard OR VersiGard White	1" for Adhered*
20 year	√	√	√	60-mil VersiGard OR VersiGard White	1" for Adhered*
25 year (3)	√ (1)	√ (1)	N/A	60-mil VersiGard OR VersiGard White	1" for Adhered*
30 year (3)	√ (1)	√ (1)	N/A	90-mil VersiGard OR VersiGard White	2" for Adhered*

VERSIGARD OR VERSIGARD WHITE NON-REINFORCED MEMBRANES - BALLASTED			
Warranty Duration	Warranty Wind Speed Coverage	Minimum Membrane Thickness	Hail Coverage
	55, 72 or 80 mph		*(Cover Board set in Adhesive)
5,10, 15, 20 or 25 year (3)	√ (2)	VersiGard 45-mil	1" for Ballasted
5,10, 15 or 20 year	√ (2)	60-mil VersiGard OR VersiGard White	2" for Ballasted
25 or 30 year (3)	√ (2)	60-mil VersiGard OR VersiGard White	2" for Ballasted
30 year (3)	√ (2)	90-mil VersiGard OR VersiGard White	3" for Ballasted

Notes: N/A = Not Acceptable √= Acceptable

(1) G200-SA Yellow Substrate Adhesive or EPDM x-23 Low-VOC, Low-VOC EPDM/TPO or CAV-GRIP 3V Bonding Adhesive must be utilized.

(2) When VersiGard Reinforced membrane is specified, 60-mil membrane minimum is required for warranties for up to 20 years. Projects with 25 / 30 year warranty must incorporate 75-mil membrane.

(3) See Attachment II '25/30 Year Warranty Design Enhancements' for enhanced design requirements.

Table II **Reinforced EPDM Membrane Thickness for Various Warranty Options**

Warranty Duration	VersiGard or VersiGard WHITE Reinforced Membranes								
	Warranty Wind Speed Coverage						Minimum Membrane Thickness	Hail Coverage	Puncture Coverage
	55, 72 or 80 mph		90 mph		100 to 120 mph			* (Cover Board set in Adhesive)	
	Fully Adhered	Mech. Attached	Fully Adhered	Mech. Attached	Fully Adhered	Mech. Attached			
5,10, or 15 year	√	√	√	√	√	N/A	45-mil VersiGard	N/A	8 man hours
20 year	√	√	√	√	√	N/A	60-mil VersiGard or VersiGard WHITE	1" for Adhered*	16 man hours
25 year (2)	√ (1)	√	√ (1)	√	√ (1)	N/A	75-mil VersiGard	2" for Adhered*	32 man hours
30 year (2)	√ (1)	√	√ (1)	√	√ (1)	N/A	75-mil VersiGard	2" for Adhered*	32 man hours

Notes: N/A = Not Acceptable √= Acceptable

(1) G200-SA Yellow Substrate Adhesive or EPDM x-23 Low-VOC, Low-VOC EPDM/TPO or CAV-GRIP 3V Bonding Adhesive must be utilized.

(2) See Attachment II '25/30 Year Warranty Design Enhancements' for enhanced design requirements.

Table III

Mechanically Fastened Membrane Fastening Criteria
Up to 20 YR Warranty (1)
22 GA. Steel, Structural Concrete, Wood Plank, and ¾" Plywood Decks

Peak Gust Wind Speed Warranty	Max. Building Height	Min. Number of Perimeter Sheets – Building Distance from Coastline: Greater than 7 miles	3 to 7 miles	Less than 3 miles	Field Membrane Width	Perimeter Sheet Width***	Fastening Density* (Field & Perimeter Sheets)
55 MPH	Up to 60'	1	2	3	10'	6.5'	12" O.C.
					8'	6.5'	12" O.C.
	61' to 100'	2	2	3	10'	6.5'	6" O.C.**
					8'	6.5'	12" O.C.
72 MPH	Up to 60'	2	2	3	10'	6.5'	12" O.C.
					8'	6.5'	12" O.C.
	61' to 100'	3	4	4	10'	6.5'	6" O.C.**
					8'	6.5'	12" O.C.
80 MPH	Up to 60'	3	3	4	10'	5'***	12" O.C.
					8'	5'***	12" O.C.
	61' to 100'	3	4	4	10'	5'***	6" O.C.**
					8'	5'***	12" O.C.
90 MPH	Up to 60'	3	4	4	10'	5'***	6" O.C.**
					8'	5'***	12" O.C.
	61' to 100'	4	5	5	10'	5'***	6" O.C. **
					8'	5'***	12" O.C.

* Using HPV Fasteners on Steel Deck, Wood Plank and 3/4" Plywood Decks with Polymer Seam Plates.

**12" o.c. Spacing can be utilized by using HPV-XL Fasteners and 2-3/8" Polymer Seam Plates.
***As an option, 9" wide EPDM Quick-Applied RTS can be used beneath the field sheets for perimeter securement.

(1) 20 year is the maximum warranty available with peak gust wind speed of 90 MPH. Projects with greater wind speed coverage **MUST** be submitted to Versico for review and possible considerations.

Mechanically Fastened Roofing Systems Fastening Criteria

Table IV

Up to 20 YR Warranty

Wood (Plywood or OSB) Decks

Peak Gust Wind Speed Warranty	Deck Type	Projected Pull-Out Values	Min. Number of Perimeter Sheets			Field Membrane Width	Perimeter Sheet Width	Fastening Density (Field & Perimeter Sheets)
			Building Distance from Coastline					
			Greater than 7 miles	3 to 7 miles	Less than 3 miles			
55 MPH	7/16" OSB	210 lbs	2	3	3	10'	5'*	9" O.C.
			2	3	3	8'	5'*	12" O.C.
	15/32" 3-Ply Plywood	240 lbs	2	2	3	8'	5'*	12" O.C.
	15/32" 5-Ply Plywood	530 lbs	1	2	3	10'	6.5'	12" O.C.
	5/8" OSB	310 lbs	2	3	3	10'	5'*	12" O.C.
			2	3	3	8'	5'*	12" O.C.
72 MPH	15/32" 3-Ply Plywood	240 lbs	2	2	3	8'	5'*	12" O.C.
	15/32" 5-Ply Plywood	530 lbs	1	2	3	10'	6.5'	12" O.C.
	5/8" OSB	310 lbs	2	3	3	10'	5'*	12" O.C.
			2	3	3	8'	5'*	12" O.C.
80 MPH	*Contact Versico for Approval and Evaluation*							

*Maximum duration for OSB shall not exceed 20 Years.

Re-roofing Substrate Criteria (Up to 20 YR Warranty)

Table V

Acceptable Roof Deck/Substrate	EPDM Membrane (See Table I and II for minimum membrane thickness)		
RETROFIT / NO TEAR-OFF	Fully Adhered - Design "A"	Ballasted - Design "B"	Mechanically Attached
Existing Smooth Surface BUR or Mineral Surface Cap Sheet	Direct Application (1)	Insulation	Direct Application (1)
Gravel Surfaced BUR	Insulation	Insulation	Insulation
Coal Tar Pitch	Insulation	Insulation	Insulation
Modified Bitumen	Direct Application (1)	Insulation	Direct Application (1)
Existing Single-Ply	Insulation	Insulation	Direct Application (1)(2)
Sprayed-in-place Urethane	Complete Tear-off Required	Insulation	Complete Tear-off Required

(1) Direct application permitted for projects with warranties up to 15 YR unless specifically approved by Versico. For acceptable insulations, when 20 YR warranty is required refer to Table VI paragraph 1.05.

(2) Direct application over existing PVC is not permitted regardless of warranty duration. Versico may be contacted for specific substrate requirement.

NOTE: Projects with Warranties greater than 20 YR require total removal of existing materials. Refer to Table VI and VII for further material requirements.

NOTE: Refer to Roof Deck and Substrate Criteria Table in Part III for additional installation requirements.

Table VI

Fully Adhered Roofing Systems Underlayment Fastening Criteria
Up to 20 YR Warranty

Other Requirements are Listed in Additional Design Considerations following this Table
All Versico Products listed for higher wind speed coverage can also be used for Warranties for lower speed coverage.
(i.e. 72 MPH underlayment may be used for 55 MPH underlayment)

Maximum Peak Gust Wind Speed Warranty	Minimum Membrane Underlayment	Insulation/Underlayment Attachment			Metal Edging
		# of Fasteners per 4' x 8' board size (1)	Adhesive Ribbon Spacing for 4' x 4' size board		
			Field	Perimeter	
55 or 72 MPH	1" (20 psi) Polyisocyanurate	16	12" (5)(6)	6" (5)	Versico Drip Edge or VersiTrim 200
	1-1/2" (20 psi) Polyisocyanurate	10			
	2"(20 psi) Polyisocyanurate	8			
	1/2" SecurShield HD	12			
	1/4" DensDeck Prime or 1/4" Securock	12			
80 MPH	1/2" SecurShield HD Plus	8	12" (5)(6)(7)	6" (5)(7)	Versico Drip Edge or VersiTrim 200 (11)
	1/2" Versico Recovery Board (2)	16			
	2" SecurShield HD Composite	6			
	1/2" DensDeck Prime or 1/2" Securock (2)	8			
	1-1/2" Polyisocyanurate(25 psi)	10			
	2" (25 -psi) Polyisocyanurate	8			
90 MPH	1/2" DensDeck Prime or 1/2" Securock (2)	12	6" (9)	6" (7)(8)	Versico Drip Edge (3), VersiTrim 200 (3)(4) or VersiTrim 2000 or 3000.
	1/2" SecurShield HD or 1-1/2" (20-psi) SecurShield Polyiso	16			
	1/2" SecurShield HD Plus or 1/2" DuraStorm VSH (2)	12			
	2" (20-psi) SecurShield or 2" SecurShield HD Polyiso Composite	8			
	1-1/2" DuraFaceR (OSB/Polyiso Composite) or 1/2" DuraStorm VSH(2)	8			
	1-1/2" Insulfoam HD Composite	16			
100 MPH	2" (25-psi) SecurShield Polyiso (1)	16	FS	FS	Versico Drip Edge (3), VersiTrim 200 (3)(4) or VersiTrim 2000 or 3000.
110 MPH	1-1/2" DuraFaceR (OSB/Polyiso Composite) or 1/2" DuraStorm VSH (2)	16	FS	FS	VersiTrim 2000 or 3000
	1/2" SecurShield HD Plus				
120 MPH	5/8" DensDeck Prime or 5/8" DensDeck StormX Prime or 5/8" Securock (2)	16	FS	FS	VersiTrim 2000 or 3000
	1-1/2" DuraFaceR (OSB/Polyiso Composite) (1) or DuraStorm VSH (2)	17			
	1/2" SecurShield HD Plus	24			
	2" SecurShield HD Composite	16			

FS = Full Spray or Ribbons @ 4" O.C.
(1) For Building heights between 51-100', enhance 12'-wide perimeter with 50% more fasteners and plates.
(2) For Steel Decks, Cover boards must be installed over a min. 1" thick approved Versico Insulation.

(3) Versico HPV or HPVX Fasteners must be used to secure Versico Drip Edge or VersiTrim 200 Metal Fascia to perimeter wood nailers.
(4) Membrane securement is required at the base of the VersiTrim 200 waterdam.
(5) Gravel Surface BUR - Field @ 6" O.C. / Perimeter @ 4" O.C.
(6) Steel Decks - Field & Perimeter @ 6" O.C.
(7) Cementitious Wood Fiber - Field @ 6" O.C. / Perimeter @ 4" O.C.
(8) Smooth BUR - Field @ 6" O.C. / Perimeter @ 4" O.C.
(9) Gravel Surface BUR – FS
(10) Reduced fastening (11 fasteners per 4x 8 board) is acceptable on Reroof/No Tear off projects with a maximum roof height of 40'.
(11) May be fastened with ring shank nails staggered 4" on center. Versico HPV or HPVX Fasteners may also be used fastened 12" on center.

Additional Adhered Design Considerations - Up to 20 YR Warranty

1 - Building height shall not exceed 100'*
2 - Local Wind Zone per ASCE 7 shall not exceed 130 mph*
3 - Acceptable decking: 22-gauge or heavier steel, structural concrete, 1-1/2" wood plank, or 15/32" plywood.

* For projects where building height exceeds 100', please submit to Versico for review.

Table VII — Underlayment/Insulation & Required Attachment Assemblies Up to 20 YR Warranty for QA EPDM Adhered Roofing Systems

Other Requirements are Listed in Additional Design Considerations following this Table.

All Versico Products listed for higher wind speed coverage can also be used for Warranties for a lower speed coverage. (i.e. 72 MPH underlayment may be used for 55 MPH underlayment)

Peak Gust Wind Speed Warranty	Minimum Membrane Underlayment	Insulation Attachment			Metal Edging
		# of Fasteners per 4' x 8' board size (1)	Adhesive Ribbon Spacing for 4' x 4' size board		
			Field	Perimeter	
55 or 72 MPH	1" (20 psi) Polyisocyanurate	16 (9)	12" (4)(5)	6" (4)	Versico Drip Edge or VersiTrim 200
	1-1/2" (20 psi) Polyisocyanurate	10			
	2" (20 psi) Polyisocyanurate	8			
	1/2" SecurShield HD	12			
	1/4" DensDeck Prime or 1/4" Securock				
	2" (1.25 lb/density) Insulfoam SP*				
80 MPH	1/2" DensDeck Prime or 1/2" Securock (2)	8	12" (4)(5)(6)	6" (4)(6)	Versico Drip Edge or VersiTrim 200 (11)
	1/2" SecurShield HD	16			
	1/2" SecurShield HD Plus	8			
	2" SecurShield HD Composite	6			
	1-1/2" (25-psi) Polyisocyanurate	10			
	2" (25 -psi) Polyisocyanurate	8			
	2" (1.25 lb/density) Insulfoam SP**	16	6" (4)(5)(6)	6" (4)(6)	
	1-1/2" Insulfoam HD Composite*	12	12"(8)	6"(6)(7)	
90 MPH	1/2" DensDeck Prime or 1/2" Securock (2)	12	6" (8)	6" (6)(7)	Versico Drip Edge (3), VersiTrim 200 (3)(4) or VersiTrim 2000 or 3000.
	1/2" SecurShield HD or 1-1/2" (20-psi) SecurShield Polyiso	16			
	1/2" SecurShield HD Plus or 1/2" DuraStorm VSH	12			
	1-1/2" DuraFaceR (OSB/Polyiso Composite)	8			
	2" (20-psi) SecurShield Polyiso or 2" SecurShield HD Composite	8			
	1-1/2" Insulfoam HD Composite	16			
100 MPH	5/8" DensDeck Prime or 5/8" DensDeck StormX Prime or 5/8" Securock (2)	16	FS	FS	Versico Drip Edge (3), VersiTrim 200 (3)(4) or VersiTrim 2000 or 3000.
	1/2" SecurShield HD Plus				
	1-1/2" DuraFaceR (OSB/Polyiso Composite) or 1/2" DuraStorm VSH				
	2" (25-psi) SecurShield Polyiso (1)				
	2" SecurShield HD Composite				

FS = Full Spray or Ribbons @ 4" O.C.
(1) For Building heights between 51-100', enhance 12'-wide perimeter with 50% more fasteners and plates.
(2) Cover boards must be installed over a min. 1" thick approved Versico Insulation.
(3) Not Used.

(4) Gravel Surface BUR - Field @ 6" O.C. / Perimeter @ 4" O.C.
(5) Steel Decks - Field & Perimeter @ 6" O.C.
(6) Cementitious Wood Fiber - Field @ 6" O.C. / Perimeter @ 4" O.C.
(7) Smooth BUR - Field @ 6" O.C. / Perimeter @ 4" O.C.
(8) Gravel Surface BUR – FS
(9) Reduced fastening (11 fasteners per 4 x 8 board) is acceptable on Reroof/No Tear off projects with a maximum roof height of 40'.
(10) Versico HPV or HPVX Fasteners must be used to secure Versico Drip Edge or VersiTrim 200 Metal Fascia to perimeter wood nailers.
(11) Membrane securement is required at the base of the VersiTrim 200 waterdam.
(12) May be fastened with ring shank nails staggered 4" on center. Versico HPV or HPVX Fasteners may also be used fastened 12" on center.
*Maximum warranty available 20 year.
** Maximum warranty available 15 year.

Additional Design Considerations (Up to 20 YR Warranty)

1 - Minimum membrane thickness 60-mil QA EPDM
2 - Building height shall not exceed 100'*
3 - Local Wind Zone per ASCE 7 shall not exceed 130 mph*
- Acceptable decking: 22-gauge or heavier steel, structural concrete, 1-1/2" wood plank, or 15/32" plywood.
- All "T-joints" must be overlaid with appropriate flashing material or Versico "T-Joint" Covers.

* Projects where building height exceeds 100' or warranty wind speed exceeds 100 mph, shall be submitted to Versico for review.

C. **Access for warranty service**

It shall be the owner's responsibility to expose the membrane in the event warrant service is required when access is impaired. Such impairment includes, but is not limited to:

1. Design features, such as window washer systems, which require the installation of traffic surface units in excess of 100 pounds per unit.

2. Any equipment, ornamentation, building service units and other top surfacing materials, which are not defined as part of this specification.

3. Photovoltaic and mounting systems or other rooftop equipment which does not provide Versico with reasonable access to the membrane system for purposes of warranty investigation and related repairs.

4. Severely ponded conditions.

CAUTION: APPLICATIONS SUCH AS WALKING DECKS, TERRACES, PATIOS OR AREAS SUBJECTED TO CONDITIONS NOT TYPICALLY FOUND ON ROOFING SYSTEMS WILL **NOT** BE ELIGIBLE FOR A MEMBRANE SYSTEM WARRANTY. VERSICO MAY BE CONTACTED FOR OTHER AVAILABLE OPTIONS.

D. The formation or presence of mold or fungi in a building is dependent upon a broad range of factors including, but not limited to, the presence of spores and nutrient sources, moisture, temperatures, climatic conditions, relative humidity, and heating/ventilating systems and their maintenance and operating capabilities. These factors are beyond the control of Versico and Versico shall not be responsible for any claims, repairs, restoration or damages relating to the presence of any irritants, contaminants, vapors, fumes, molds, fungi, bacteria, spores, mycotoxins, or the like in any building or in the air, land, or water serving the building.

1.06 JOB CONDITIONS

A. On phased roofing, temporary closures should be provided to prevent moisture infiltration. When a temporary roof is specified, Versico 725-TR in conjunction with CCW-702, CCW-702 LV or CAV-GRIP 3V Primer may be used. Refer to Product Section Part II for additional product information and **Spec Supplement G-07-20 "Application Procedures for 725TR Air and Vapor Barrier**".

B. When possible on multiple level roofs, begin the installation on the highest level to avoid or minimize construction traffic on completed roof sections.

C. On projects at high altitudes (6,000' and above) rapid flash-off (drying) of substrate adhesive and primers will occur due to low atmospheric pressure.

D. Vapor Retarders

1. Versico does not require a vapor retarder for the protection of the membrane; however, it should be considered by the specifier for the protection of the roofing assembly (i.e. primarily insulation, underlayment and adhesives). The following criteria should be considered by the specifier:

   a. Use of a vapor retarder to protect insulation and reduce moisture accumulation within an insulated roofing assembly, should be investigated by the specifier. Consult latest publications by ASHRAE (American Society of Heating, Refrigerating and Air-Conditioning Engineers, Inc.) and NRCA (National Roofing Contractors Association) for specific information.

   b. In the generally temperate climate of the United States, during the winter months, water vapor flows upward from a heated, more humid interior toward a colder, drier exterior. Vapor retarders are more commonly required in northern climates than in southern regions, where downward vapor pressure may be expected and the roofing membrane itself becomes the vapor retarder.

   c. On cold storage/freezer facilities, the perimeter and penetration details must be selected to provide an air seal and prevent outside air from infiltrating and condensing within the roofing assembly.

2. When a vapor retarder is specified, VapAir Seal 725TR or VapAir Seal MD Air and Vapor Barrier may be used. Refer to Part II "Products" for necessary information and **Spec Supplement G-07-20 "Application Procedures for 725TR Air and Vapor Barrier"** for product installation.

E. Wood nailers are required for the securement of metal edgings, scuppers, and insulated pipes. Treated or non-treated wood nailers may be specified and shall be secured per specifier recommendation or in accordance with Factory Mutual's Property Loss Prevention Data Sheet 1-49. Refer to **Design Reference DR-08-11 "Wood Nailers and Securement Criteria**" in Versico Technical Manual shall be reference.

F. For fully adhered or mechanically attached systems specified over existing standing seam, flat seam or corrugated metal roofs, refer to the Versico's Metal Retrofit Roofing System Specifications.

G. When any of the EPDM Roofing Systems are specified on a portion of a roof, tie-ins to existing roofing membranes will be required. Depending on the type of the existing roofing system, the tie-in method will vary. Total isolation between two roofing systems or weep holes may be required to address moisture migration from one roofing system to the other. Prior to the selection of any tie-in detail, ensure the selected detail will not restrict drainage.

1.07 Product Delivery, Storage and Handling

A. Deliver materials to the job site in **original**, unopened containers.

B. When loading materials onto the roof, the Versico Authorized Roofing Contractor must comply with the requirements of the specifier/owner to prevent overloading and possible disturbance to the building structure.

C. Job site storage temperatures in excess of 90°F (32°C) may affect shelf life of curable materials (i.e., uncured flashing, adhesives, sealants, primers, QA Seam Tape and Quick-Applied Flashing/Accessories).

D. **When the temperature is expected to fall below 40°F (4°C),** outside storage boxes should be provided on the roof for temporary storage of liquid adhesives, sealants, primers, QA Seam Tape and Quick-Applied Flashing/accessories. Containers must be rotated to maintain their temperature above 40°F (4°C). Refer to Technical Data Bulletins for individual products for temperature restrictions.

   NOTE: Prolonged exposure of quick-applied flashing and QA Seam Tape to temperatures below 40°F (4°C) will cause the pre-applied adhesive tape to lose tack and in extreme cases, not bond to the substrate. Refer to **Spec Supplement E-02-20 "EPDM Membrane Splicing and Slice Repairs**" in Versico's Technical Manual for application procedures in colder temperatures.

E. Do not store adhesive containers with opened lids due to the loss of solvent, which will occur from flash-off.

F. Insulation/underlayment must be stored so it is kept dry and is protected from the elements. Store insulation on a skid and completely cover with a breathable material such as a tarp or canvas. If the insulation is lightweight, it should be weighted to prevent possible wind damage.

Part II- Products

2.01 General

The components of this roofing system are to be products of Versico or accepted by Versico as compatible. The installation, performance or integrity of products by others, **when selected by the specifier and accepted by Versico,** is not the responsibility of Versico and is expressly disclaimed by the Versico warranty.

2.02 Membrane

A. **VersiGard (Black and White) Non-Reinforced EPDM Membranes**

1. Cured non-reinforced EPDM (Ethylene, Propylene, Diene Terpolymer) compounded elastomer.

   VersiGard 45- (Black Membrane Only), 60-, or 90-mil thick Non-Reinforced EPDM membrane is available in **Black** or **White**. VersiGard Gray is only available in 60-mil thickness. VersiGard White membranes are installed with the white surface facing up. VersiGard (black) membrane with thickness up to 60-mil can be available in widths up to 50' and lengths up to 150' (200' for 45-mil membrane only). VersiGard White membrane with thickness of 60-mil is available up to 20' widths and lengths up to 150' long. VersiGard Black / VersiGard White 90-mil and Sure-Seal Gray 60-mil membranes membranes are available in widths up to 10' and lengths up to 100'. Membrane conforms to ASTM D4637, Type I (non-reinforced).

2. **VersiGard Clean (black) EPDM Membrane** (mica dust has been removed during manufacturing) is available for sheets maximum 10' wide.

3. **VersiGard Gray Non-Reinforced EPDM Membrane** is available with and without QAT.

4. Refer to the physical properties listed on the following pages.

B. **VersiGard Reinforced EPDM Membranes**

1. Cured reinforced EPDM (Ethylene, Propylene, Diene Terpolymer) compounded elastomer. **VersiGard Reinforced EPDM Membrane** is only available in black.

   45-, 60- or 75-mil thick VersiGard Reinforced EPDM Membrane is available in sizes referenced in Table below. Reinforced membrane with polyester fabric conforms to ASTM D4637, Type II (reinforced).

VersiGard Reinforced Membrane Size Availability*			
Membrane Thickness	Sheet Sizes		
45-mil	5' or 6.5' X 100'	-	10' x 50' or 100'
60-mil	5' or 6.5' X 100' 5' x 200'	8' x 100'	10' x 50' or 100'
75-mil	-	-	10' x 50' or 100'

*Contact Versico for other custom sizes available.

2. **60-mil thick Versi-Gard WHITE Reinforced EPDM** membrane is available in a 10' x 100' sheet size.

3. Refer to the physical properties listed on the following pages

45-, 60-, AND 90-MIL THICK NON-REINFORCED EPDM MEMBRANE

45-mil thick VersiGard (standard) non-reinforced EPDM membrane is used only for VersiGard Design "B" Loose Laid Ballasted Roofing Systems.

60- or 90-mil thick VersiGard (black and white) non-reinforced EPDM membrane is used primarily for fully adhered roofing systems. Either membrane can also be used for ballasted and protected membrane assemblies.

NOTE: Although 60-mil Non-Reinforced EPDM is recommended for Adhered Roofing Systems, 45-mil thick FR Non-Reinforced EPDM may be utilized, if specified.

VERSIGARD BLACK/VERSIGARD WHITE NON-REINFORCED MEMBRANES

Physical Property	Test Method	ASTM SPEC. (Pass)	Typical			
			45-mil	60-mil	60-mil	90-mil
			FR	FR	White and Gray	VersiGard Black FR/ VersiGard White
Tolerance on Nominal Thickness, %	ASTM D 412	±10	±10	±10	±10	±10
Weight, lb./ft² (kg/m²)			0.26 (1.3)	0.35 (1.7)	0.39 (1.9)	0.59 (2.9)**
Tensile Strength, min, psi (MPa)	ASTM D 412	1305 (9)	1600 (11)	1600 (11)	1600 (11)	1600 (11)
Elongation, Ultimate, min, %	ASTM D 412	300	480	465	540	540
Tear Resistance, min, lbf/in (kN/m)	ASTM D 624 (Die C)	150 (26.3)	200 (35.0)	200 (35.0)	200 (35.0)	200 (35.0)
Factory Seam Strength, min.	Modified ASTM D 816	Membrane Rupture	Membrane Rupture	Membrane Rupture	Membrane Rupture	Membrane Rupture
Resistance to Heat Aging* Properties after 4 weeks @ 240°F (116°C)	ASTM D 573					
Tensile Strength, min, psi (MPa)	ASTM D 412	1205 (8.3)	1500 (10.3)	1450 (10)	1345 (9.3)	1450 (10)
Elongation, Ultimate, min, %	ASTM D 412	200	225	280	280	280
Tear Resistance, min, lbf/in (kN/m)	ASTM D 624	125 (21.9)	215 (37.6)	215 (37.6)	185 (32.4)	215 (37.6)
Linear Dimensional Change, max, %	ASTM D 1204	±1.0	-0.4	-0.5	-0.2	-0.5
Ozone Resistance* Condition after exposure to 100 pphm Ozone in air for 168 hours @ 104°F (40°C) Specimen is at 50% strain	ASTM D 1149	No Cracks	No Cracks	No Cracks	No Cracks	No Cracks
Brittleness Temp., max, deg. F (deg. C)*	ASTM D 746	-49 (-45)	-49 (-45)	-49 (-45)	-67 (-55)	-49 (-45)
Resistance to Water Absorption* After 7 days immersion @ 158°F (70°C) Change in mass, max, %	ASTM D 471	+8.0, -2.0	[+2]	[+2]	[+3.3]	[+2.0]
Water Vapor Permeance* max, perm	ASTM E 96 (Proc. B or BW)	0.1	0.05	0.03	0.02	0.03
Resistance to Outdoor (Ultraviolet) Weathering* Xenon-Arc, total radiant exposure at .70 W/m² irradiance, 176°F (80º C) black panel temp.	ASTM D 4637 Conditions	No Cracks No Crazing @7560 kJ/m²	No Cracks No Crazing @41580 kJ/m²	No Cracks No Crazing @41580 kJ/m²	No Cracks No Crazing @25200 kJ/m²	No Cracks No Crazing @41580 kJ/m²(black) @25200 kJ/m² (white)

* Not a Quality Control Test due to the time required for the test or the complexity of the test. However, all tests are run on a statistical basis to ensure overall long-term performance of the sheeting.
** VersiGard White 90-mil Membrane Weight in lb/ft2(kg/m2) is equal to 0.60 (2.9)

60-MIL THICK REINFORCED EPDM MEMBRANE

The membrane is used for Mechanically Fastened or Adhered Roofing Systems.

VersiGard membranes are formulated with fire retardants to inhibit spread of flame and meets or exceeds UL Class A requirements for slopes up to 2”, depending on the assembly.

VERSIGARD WHITE REINFORCED MEMBRANE			
Physical Property	**Test Method**	**ASTM SPEC. (Pass)**	**Typical 60-mil**
Tolerance on Nominal Thickness, %	ASTM D 751	±10	±10
Weight, lb/ft² (kg/m²)			0.40 (2.0)
Thickness Over Scrim, min. in.(mm)	ASTM D 4637 Annex	0.015 (.381)	0.020 (.508)
Breaking Strength, min, lbf (N)	ASTM D 751 Grab Method (1)	90 (400)	225(996)
Elongation, Ultimate, min, %	ASTM D 751 Grab Method	250 **	480**
Tear Strength, min, lbf (N)	ASTM D 751 B Tongue Tear	10 (45)	70 (311)
Brittleness Temp., max. deg. F (deg. C)*	ASTM D 2137	[-49] (-45)	[-49] (-45)
Resistance to Heat Aging* Properties after 4 weeks @ 240°F	ASTM D 573		
Breaking Strength, min, lbf (N)	ASTM D 751	80 (355)	250 (1,110)
Elongation, Ultimate, min, %	ASTM D 412	200**	250**
Linear Dimensional Change, max, %	ASTM D 1204	±1.0	-1.0
Ozone Resistance* Condition after exposure to 100 pphm Ozone in air for 168 hours @ 104°F (40°C) Specimen wrapped around 3" mandrel	ASTM D 1149	No Cracks	No Cracks
Resistance to Water Absorption* After 7 days immersion @ 158°F (70°C) Change in mass, max, %	ASTM D 471	+8.0, -2.0	[5.2**]
Water Vapor Permeance* Max. perms	ASTM E 96 (Proc. B or BW)	0.10	0.02
Fungi Resistance	ASTM G 21	N/A	0 (No Growth)
Resistance to Outdoor (Ultraviolet) Weathering* Xenon-Arc, total radiant exposure at .70 W/m^2 irradiance, 176°F (80º C) black panel temp.	ASTM G 155	No Cracks No Crazing @ 2,520 kJ/m^2 1,000 hrs.	No Cracks No Crazing @ 25,200 kJ/m^2 10,000 hrs.
At 0.35 W/m^2 irradiance, 80°C black panel temperature		2,000 hrs.	20,000 hrs.

* Not a Quality Control Test due to the time required for the test or the complexity of the test. However, all tests are run on a statistical basis to ensure overall long-term performance of the sheeting.

** Specimens to be prepared from coating rubber compound, vulcanized in a similar method to the reinforced product.

45-, 60- OR 75-MIL THICK REINFORCED EPDM MEMBRANE

The membrane is used for Fully Adhered or Mechanically Attached Roofing Systems

The standard VersiGard membranes are formulated with fire retardants to inhibit spread of flame and meets or exceeds UL Class A requirements for slopes up to 3", depending on the assembly.

VERSIGARD REINFORCED MEMBRANES					
Physical Property	**Test Method**	**ASTM SPEC. (Pass)**	**Typical**		
			45-mil	**60-mil**	**75-mil**
Tolerance on Nominal Thickness, %	ASTM D 751	±10	±10	±10	±10
Weight, lb/ft² (kg/m²)			0.27 (1.3)	0.39 (1.9)	0.48 (2.3)
Thickness Over Scrim, min. in.(mm)	ASTM D 4637 Annex	0.015 (.381)	0.016 (.406)	0.020 (.508)	0.032 (0.81)
Breaking Strength, min, lbf (N)	ASTM D 751 Grab Method	90 (400)	140 (623)	140 (623)	177 (787)
Elongation, Ultimate, min, %	ASTM D 751 Grab Method	250 **	480**	480**	500**
Tear Strength, min, lbf (N)	ASTM D 751 B Tongue Tear	10 (45)	70 (311)	70 (311)	70 (311)
Brittleness Temp., max. deg. F (deg. C)*	ASTM D 2137	[-49] (-45)	[-49] (-45)	[-49] (-45)	[-49] (-45)
Resistance to Heat Aging* Properties after 4 weeks @ 240°F	ASTM D 573				
Breaking Strength, min, lbf (N)	ASTM D 751	80 (355)	182 (823)	182 (823)	182 (823)
Elongation, Ultimate, min, %	ASTM D 751	200**	250**	250**	250**
Linear Dimensional Change, max, %	ASTM D 1204	±1.0	-1.0	-1.0	-1.0
Ozone Resistance* Condition after exposure to 100 pphm Ozone in air for 168 hours @ 104°F (40°C) Specimen wrapped around 3" mandrel	ASTM D 1149	No Cracks	No Cracks	No Cracks	No Cracks
Resistance to Water Absorption* After 7 days immersion @ 158°F (70°C) Change in mass, max, %	ASTM D 471	+8.0, -2.0	[+5.5**]	[+5.5**]	[+5.5**]
Factory Seam Strength, min.	Modified ASTM D 816	Membrane Rupture	Membrane Rupture	Membrane Rupture	Membrane Rupture
Resistance to Outdoor (Ultraviolet) Weathering* Xenon-Arc, total radiant exposure at .70 W/m² irradiance, 176°F (80º C) black panel temp.	ASTM D 4637 Conditions	No Cracks No Crazing @7560 kJ/m²	No Cracks No Crazing @35320 kJ/m²	No Cracks No Crazing @35320 kJ/m²	No Cracks No Crazing @35320 kJ/m²
* Not a Quality Control Test due to the time required for the test or the complexity of the test. However, all tests are run on a statistical basis to ensure overall long-term performance of the sheeting.					
** Specimens to be prepared from coating rubber compound, vulcanized in a similar method to the reinforced product.					

2.03 Insulations/Underlayments

A. **General**

1. Roof insulation thickness must be determined by the thermal value required for each project and may be subject to code approval limitations. On projects where a vapor retarder is used, the specifier must calculate insulation thickness to ensure the temperature at the vapor retarder will not fall below the calculated dew point.

2. Multiple layers of insulation are recommended with all joints staggered between layers.

3. For minimum recommended R-Values, previously published by American Society of Heating and Air-Conditioning Engineers (ASHRAE), consult local building code official for applicable requirements.

4. For insulation fastening pattern and densities refer to Versico Applicable Details and **Design Reference DR-05-23 "Insulation Fastening Patterns".**

5. Versico insulation/underlayment must be specified for all Total System Warranty projects. Any of the Versico insulation/underlayment may be specified subject to design restrictions included with each table

B. **Versico Polyisocyanurate**

Table B1	**Polyisocyanurate** (See below for product descriptions)				
Insulations / Underlayment	**Minimum Thickness**	**ASTM**	**Roofing System Acceptability**		
			Adhered	**Mechanically Attached**	**Ballasted**
Versico VersiCore Polyiso	*1.5"	C1289, Type II, Class 1, Grade 2 or 3	√	√	√
Versico VersiCore NH Polyiso	*1.5"	C1289, Type II, Class 1, Grade 2 or 3	√	√	√
Versico VersiCore HD	0.5"	C1289, Type II, Class 1, Grade 3	N/A	√	N/A
SecurShield Polyisocyanurate	*1.5"	C1289, Type II Class 2, Grade 2 or 3	√	√	√
SecurShield NH Polyisocyanurate	*1.5"	C1289, Type II Class 2, Grade 2 or 3	√	√	√
SecurShield HD Polyiso Composite (SS HD)	2"	C1289, Type IV, Grade 2 or 3	√	√	√
DuraFaceR Polyiso Composite (OSB)	1.5"	C1289, Type V, Grade 2 or 3	√	√	N/A
Design Restrictions					
- Extended Warranty, those with longer duration, higher wind speed, or puncture coverage, may require the use of a cover board over Polyiso Insulation, refer to Warranty Tables in Paragraph 1.04 for applicable requirements. - Maximum Flute Spanability shall be limited to 2-5/8" when 1" Minimum Polyiso Insulation is to be used. - Minimum thickness of insulation board may be restricted by wind speed coverage and warranty duration, refer to Tables V and VI in Paragraph 1.05. - The use of HD Polyiso Composite roof insulation is not recommended for Ballasted Applications. *1.5" minimum for adhered systems. 1" minimum for mechanically fastened systems or as a base layer for adhered. Notes: N/A = Not Acceptable √ = Acceptable					

SecurShield HD is listed in Paragraph F4 below.

1. **Versico VersiCore Polyiso –** A foam core insulation board covered on both sides with a medium weight fiber-reinforced felt facer meeting, ASTM C 1289-06, Type II, Class 1, Grade 2 (20 psi) or Grade 3 (25 psi). The product is available in 4' x 8' standard size with a thickness from 1 to 4 inches. 4' x 4' tapered panels are also available.

2. **Versico VersiCore NH Polyiso –** A foam core insulation board covered on both sides with a glass-reinforced felt meeting ASTM C 1289, Type II, Class 1, Grade 2 (20 psi) or Grade 3 (25 psi). The product is available in 4' x 4' and 4' x 8' standard size with a thickness from ½" to 4 inches. VersiCore NH Polyiso contains zero halogenated flame retardants.

3. **Versico VersiCore HD** – A high-density, foam core insulation board covered on both sides with a glass-reinforced felt meeting ASTM C 1289, Type II, Class 1, Grade 3 (25 psi). The product is available on 4' x 4' and 8' x 8' standard size with a thickness of one-half inch.

4. **SecurShield Polyisocyanurate-** A foam core insulation board covered on both sides with a coated glass fiber mat facer meeting ASTM C 1289-06, Type II, Class 2 (20 psi) or Grade 3 (25 psi). The product is available in 4' x 8' standard size with a thickness from 1 to 4 inches. 4' x 4' tapered panels are also available. These flat board products feature a dark-colored coated-glass facer (CGF) on one side of the insulation board and a light-colored CGF on the other, labeled Ready Flash. Ready Flash Technology

allows applicators to manage adhesive flash-off times by choosing between two different-colored facers on every board.

5. **SecureShield NH Polyisocyanurate -** A foam core insulation board covered on both sides with a coated glass fiber mat facer meeting ASTM C 1289, Type II, Class 2, Grade 2 (20 psi) or Grade 3 (25 psi). The product is available in 4' x 4' and 4' x 8' standard size with a thickness from ½ inch to 4 inches. SecurShield NH contains zero halogenated flame retardants.

6. **SecurShield HD Composite** – Composite insulation panel comprised of 1/2 inch high-density (109 psi max) Polyiso cover board laminated during the manufacturing process to SecurShield rigid Polyiso roof insulation meeting ASTM C1289 Type IV, Grade 2 (20 psi) or Grade 3 (25 psi). Available in 4' x 8' boards with a thickness from 2" to 4.5". 4' x 4' panels are also available.

7. **DuraFaceR Polyiso Composite (OSB) –** Polyiso insulation bonded on the bottom side with a medium weight fiber reinforced felt facer and laminated with a top surface of 7/16" or 5/8" thick Oriented Strand Board (OSB) meeting ASTM C 1289-06, Type V, Grade 2 (20 psi) or Grade 3 (25 psi). Available in 4' x 8' boards with a thickness from 1-1/2" to 4".

C. **EPS : Expanded Polystyrene**

Table C1 **EPS: Expanded Polystyrene** (See below for product descriptions)

Insulations / Underlayment	Minimum Thickness	ASTM	Roofing System Acceptability		
			Adhered	Mechanically Fastened	Ballasted
InsulFoam I	1"	C578 Type I	N/A	N/A	√
InsulFoam VIII	.75"	C578 Type VIII	N/A	N/A	√
InsulFoam II	.75"	C578 Type II	N/A	N/A	√
InsulFoam IX	.75"	C578 Type IX	N/A	N/A	√
InsulFoam HD Composite (SecurShield HD)	1.5"	C578 Type (I, VIII, II, or IX)	√	√	N/A
InsulLam (Various Cover Boards)	1.5"	C578 Type (I, VIII, II. or IX)	√	N/A	N/A
InsulFoam SP	1"	C578 Type VIII	N/A	√	√

Design Restrictions

- Local Codes must be consulted regarding the acceptance of expanded insulation directly over steel decks. When specified, minimum thickness shall be designated by the manufacturer.
- Expanded polystyrene roof insulations cannot be installed directly over coal-tar pitch roof surfaces or existing PVC membranes. A separation layer of minimum 1/2" SecurShield HD, Versico Recovery Board or Polyiso Insulation shall be used.
- The use of InsulFoam HD Composite roof insulation is not recommended for Ballasted Applications.

Notes: N/A = Not Acceptable √ = Acceptable

R-Tech Fanfold Recover Board is listed in Paragraph C4 below.

1. **InsulFoam I -** A closed-cell lightweight expanded polystyrene (EPS) that meets ASTM C578, Type I. Nominal density of 1.0 lbs/cubic ft. (pcf) available in 4' x 4' or 4' x 8' sizes with thickness from 1/4" to 40". Custom lengths, widths and tapered boards are available. May be specified beneath Versico HP Recovery Board, Dens-Deck Prime, DensDeck StormX Prime or Securock.

2. **InsulFoam VIII** – A closed-cell lightweight expanded polystyrene (EPS) that meets ASTM C578, Type VIII. Nominal density of 1.25 lbs/cubic ft. (pcf) available in 4' x 4' or 4' x 8' sizes with thickness from 1/4" to 40". Custom lengths, widths and tapered boards are available. May be specified beneath Versico Recovery Board, Dens-Deck Prime, DensDeck StormX Prime or Securock.

3. **InsulFoam II** – A closed-cell lightweight expanded polystyrene (EPS) that meets ASTM C578, Type II. Nominal density of 1.5 lbs/cubic ft. (pcf) available. May be specified beneath Recovery Board, Dens-Deck Prime, DensDeck StormX Prime or Securock.

4. **InsulFoam IX** – A closed-cell lightweight expanded polystyrene (EPS) that meets ASTM C578, Type IX, Nominal density of 2.0 lbs/cubic ft. (pcf) available in 4' x 4' or 4' x 8' sizes with thickness from 1/4" to 40" . Custom lengths, widths and tapered boards are available. May be specified beneath Recovery Board, Dens-Deck Prime, DensDeck StormX Prime or Securock.

5. **InsulFoam HD Composite-** InsulFoam expanded polystyrene (EPS) insulation laminated with a top surface of 1/2" thick SecurShield HD. Available in 4' x 8' boards with thickness from 1-1/2" to 7".

6. **InsulLam** – InsulFoam expanded polystyrene (EPS) insulation laminated with a top surface of 7/16" or 5/8" thick Oriented Strand Board (OSB), 1/2" Securock, or 1/2" Versico Recovery Board. Available in 4' x 8' boards with thickness from 1-1/2" to 7".

7. **InsulFoam SP** – A closed-cell lightweight expanded polystyrene (EPS) with a factory-laminated fiber glass facer. Nominal density of 1.25 lbs/cubic ft. (pcf), and meets ASTM C578, Type VIII. Designed for low-sloped roof applications that employ mechanically attached or ballasted membranes.

D. **XPS: Extruded Polystyrene –** Available through Versico is dimensionally stable with high thermal and low water absorption performance capability. XPS is available in varying compressive strengths thicknesses and sizes. Refer to specific Technical Data Bulletins for physical properties and additional technical information.

Table D1 **XPS: Extruded Polystyrene** (See below for product descriptions)

Insulations / Underlayment	Minimum Thickness	ASTM	Roofing System Acceptability		
			Fully Adhered	Mechanically Attached	Ballasted
Thermapink 18	.75"	Refer to Technical Data Bulletin	N/A	N/A	√
Thermapink 25	1"	Refer to Technical Data Bulletin	N/A	N/A	√
Foamular 400	1"	Refer to Technical Data Bulletin	N/A	N/A	√
Dow Styrofoam Deckmate Plus	1"	Refer to Technical Data Bulletin	N/A	N/A	√

Design Restrictions

- Local Codes must be consulted regarding the acceptance of expanded insulation directly over steel decks. When specified, minimum thickness shall be designated by the manufacturer.
- Expanded polystyrene roof insulations cannot be installed directly over coal-tar pitch roof surfaces or existing PVC membranes. A separation layer of minimum 1/2" SecurShield HD, Versico Recovery Board or Polyiso Insulation shall be used.
- Refer to related products listed in **Spec Supplement P-01-22 "Related Products"** for other products which may be suitable for use. Versico must be contacted for specific requirements.

Notes: N/A = Not Acceptable √ = Acceptable

2. **Thermapink 18 or 25 Extruded Polystyrene**

3. **Foamular 400 Extruded Polystyrene**

4. **Dow Styrofoam Deckmate Plus Extruded Polystyrene**

E. **Versico Vacuum Insulated Panel (VIP)**

Table E1 **Vacuum Insulated Panel (VIP)** (See below for product descriptions)

Insulations / Underlayment	Minimum Thickness	ASTM	Roofing System Acceptability	
			Adhered	Mechanically Attached
Versico Optim-R VIP	*1.6"	C1484	√	N/A

Design Restrictions

*2.6" minimum for total installed system including an additional 2 layers of 1/2" SecurShield HD panels; 1 layer on top and 1 layer on bottom of Optim-R. For adhered systems only. Note: Optim-R VIP cannot be cut or punctured.

Notes: N/A = Not Acceptable √ = Acceptable

1. **Optim-R Vacuum Insulated Panel (VIP) –** a high R-Value vacuum insulated panel (VIP) used to provide a

low-profile solution when height restrictions exist, such as windows, doors, equipment curbs, etc. Provides an R-38 insulating value in a 2.6” system thickness with up to 35% infill (non-VIP material). Available in 23.6” x 23.6” and 23.6” x 47.2” board sizes.

F. **Cover Boards/Slip Sheets**

Table F1		**Cover Boards** (See below for product descriptions)			
			Roofing System Acceptability		
Insulations / Underlayment	**Minimum Thickness**	**ASTM**	**Adhered**	**Mechanically Attached**	**Ballasted**
SecurShield HD	.5"	C1289, Type II, Class 4 (109 psi max)	√	√	N/A(2)
SecurShield HD Plus	.5”	C1289, Type II, Class 4 (109 psi max)	√	√	N/A(2)
VersiCore HD	.5”	C1289, Type II, Class 1, Grade 3	N/A	√	N/A
DuraStorm VSH	.5”	Refer to Technical Data Bulletin	√	√	N/A
Securock Cover Board	.25"	Refer to Technical Data Bulletin	√	√	N/A
Recovery Board	.5"	C208 Grade 2	√	√	√
DensDeck StormX Prime	.625”	C1177	√	√ (1)	N/A
DensDeck Prime	.25"	C1177	√	√ (1)	N/A
DensDeck	.25"	C1177	N/A	√ (1)	N/A
R-Tech Fanfold Recovery Board	.5"	C578 Type (I, VIII, II. or IX)	N/A	√	√
Protection Mat	6 oz	Refer to Technical Data Bulletins	N/A	√	√

Design Restrictions

- Recovery Board and R-Tech Fanfold not recommended for direct use over Type B and F steel decks.
- Securock Cover Board, Recovery Board, DensDeck Prime, DensDeck StormX Prime or DensDeck may not be used directly over New or Existing Lightweight Insulating Concrete Decks existing or Structural Concrete.
- Due to some warranty restrictions, DensDeck, DensDeck Prime and DensDeck StormX Prime not recommended for use directly over existing roofing membrane without prior written approval from Versico. Contact Versico for specific requirements.
- R-Tech Fanfold primarily for use in existing roof re-covers applications or directly over structural or lightweight insulating concrete.
- Protection Mat may be used for Ballasted systems over Lightweight Insulating Concrete with a Maximum Warranty duration of up to 15 years. To be used for Mechanically Attached on new construction projects with Lightweight Insulating Concrete, Fiber Cement or Gypsum Deck a Maximum Warranty duration of up to 15 years.

(1) Permitted with roofs with slopes greater than 2” per foot for compliance with external fire codes, refer to UL listings or contact Versico.
(2) Acceptable for some roof system designs. Contact Versico for Recommendations

Notes: N/A = Not Acceptable √ = Acceptable

1. **SecurShield HD** – A rigid insulation panel composed of a high-density (109 psi max), closed-cell polyisocyanurate foam core laminated to coated-glass fiber-mat facer for use as a cover board or recover board. Available 1/2" thick 4’ x 8’ panel weight 11 lbs with an R-value of 2.5. These flat board products feature a dark-colored coated-glass facer (CGF) on one side of the insulation board and a light-colored CGF on the other, labeled Ready Flash. Ready Flash Technology allows applicators to manage adhesive flash-off times by choosing between two different-colored facers on every board.

2. **SecurShield HD Plus** – A rigid insulation panel composed of a high-density (109 psi max), closed-cell polyisocyanurate foam core laminated to premium-performance coated-glass fiber-mat facer for use as a cover board or recover board. Available 1/2" thick 4’ x 8’ panel weight 11 lbs with an R-value of 2.5. Meets an FM 1-90 using only 8 fasteners per 4’ x 8’ board.

3. **VersiCore HD** – a closed-cell polyisocyanurate foam core insulation board covered on both sides with glass-reinforced felt (GRF) facer meeting ASTM C 1289, Type II, Class 1, Grade 3. The product is available in 4’ x 4’ and 4’ x 8’ standard sizes with a thickness of one-half inch.

4. **Securock Cover Board –** A uniform composition of fiber-reinforced gypsum, without a facer, for use as a cover board or a thermal barrier. Available in 1/4” to 5/8” thick and 4’ x 4’ or 4’ x 8’ size boards. Long uninterrupted runs (>200’) may require slight gapping due to thermal expansion.

5. **DuraStorm VSH Cover Board –** an engineered composite building material made from a proprietary blend

of plastic and cellulose fiber sourced from post-industrial and post-consumer waste streams. DuraStorm VSH is a durable, extremely moisture and mold resistant building material with a core that does not disintegrate or delaminate in the presence of water. Available in 1/2” thick and 4’ x 8’ size board.

6. **Versico Recovery Board** – A 1/2" or 1” thick high-density wood fiberboard with an asphalt coated facer for use as a cover board or recover board. Available 1/2" or 1” thick and 4’ x 4’ or 4’ x 8’ size boards. When used in reroof / no tear-off projects, warranty is limited to 15-year projects.

7. **DensDeck StormX Prime** – a reinforced gypsum cover board with an enhanced, moisture-resistant core and coated glass mat facers on the top and bottom side. The top surface is pre-primed and provides excellent bond strength for adhered membrane for use as a cover board. DensDeck StormX Prime is extremely durable and is approved for use in assemblies meeting FM’s Very Severe Hail (VSH) Classification. Available in 5/8” thickness and 4’ x 4’ or 4’ x 8’ size boards.

8. **DensDeck Prime** – Gypsum core that incorporates glass-mat facings on the top and bottom side. The top surface is pre-primed and provides excellent bond strength for fully adhered membrane for use as a cover board. Available in 1/4” to 5/8” and 4’ x 4’ or 4’ x 8’ size boards.

9. **DensDeck Cover Board** – Gypsum core that incorporates glass-mat facings on the top and bottom side for use as a cover board. Available in 1/4” to 5/8” and 4’ x 4’ or 4’ x 8’ size boards.

10. **R-Tech FanFold Recover Board** – Closed-cell lightweight expanded polystyrene (EPS) with polymeric laminated faces which meets ASTM C578 for use as a recover board. Polymeric facer compatible with PVC membrane, while metallic side used with EPDM. Available in thicknesses of 3/8” to 3/4" with coverage 4’ x 50’ (2 squared). 4’ x 8’ units are also available.

11. **HP Protective Mat** – A nominal 6-oz per square yard UV resistant polypropylene needle punched fabric used either above the membrane as a slip-sheet for ballast or an underlayment to the membrane. Available 15’ x 300’ roll (4500 square foot) weighing 0.06 lbs per square foot.

2.04 **Related Materials**

A. **Flashing**

1. **VersiGard Black/VersiGard White Quick-Applied Cured Cover Strip:** A 6” and 9” widths and 100’ long and 12” wide by 50’ long VersiGard Black or VersiGard White 60-mil cured EPDM membrane laminated to a nominal 30-mil cured Quick-Applied Tape. The Cured Cover Strip is ideal for flashing gravel stops, metal edging and Versico Seam Fastening Plates.

2. **VersiGard Quick-Applied Overlayment Strip:** A nominal 40-mil black, **semi-cured** EPDM membrane laminated to a nominal 30-mil cured, Quick-Applied Tape. Available in 6” and 9” widths and 100’ long and 12” width with 50’ long rolls used to overlay seams, flash gravel stops, metal edgings and Seam Fastening Plates used for additional membrane securement.

3. **VersiGard (black and white) Quick-Applied Uncured Flashing:** A 6” x 100’ and 9” or 12” wide by 50’ long, 60-mil thick VersiGard Black or VersiGard White **uncured** EPDM Flashing laminated to a 30-mil Quick-Applied Tape used in conjunction with EPDM Primer.

   VersiGard/VersiGard White Uncured Quick-Applied Flashing is used to flash inside and outside corners, pipes, scuppers and field fabricated pourable sealer pockets when the use of Versico pre-fabricated flashing accessories is not feasible.

4. **VersiGard/VersiGard White Quick-Applied Curb Flashing** – A 20” wide by 50’ long VersiGard Black or cured 60-mil thick EPDM membrane with 6” wide Quick-Applied Tape along one edge to be used to flash curbs/skylights, etc.

5. **VersiGard/VersiGard White 20” Peel & Stick EPDM Cured Flashing** – A 20” wide by 50’ long VersiGard Black or VersiGard White cured 60-mil thick EPDM membrane with Quick-Applied TAPE the full width already applied, used to flash curbs/skylights, etc.

6. **VersiGard/VersiGard White Quick-Applied “T” Joint Covers** – A factory cut 6” x 6” or 12” x 12” uncured 60-mil thick EPDM flashing laminated to a nominal 30-mil Quick-Applied Tape, used to overlay field splice intersections and to cover field splices at angle changes. Available in 6” x 6” and 12” x 12” sizes for VersiGard (black) and 6” x 6” sizes for VersiGard White and VersiGard Gray.

7. **VersiGard (black) /VersiGard White Quick-Applied Inside/Outside Corner** – A 7” x 9” precut 60-mil thick (black, gray or white) Uncured Flashing with a 30-mil Quick-Applied Tape; used for inside and outside corners, to overlay field splice intersections, and to cover field splices at angle changes.

8. **VersiGard (black) /VersiGard White Quick-Applied Pipe Seals** with Quick-Applied Tape on the deck flange are available for use with VersiGard/VersiGard White Roofing Systems:

   a. VersiGard (black) Quick-Applied Pipe Seals are available in sizes: 1/2" to 3" and 1" to 6".
   b. VersiGard White and VersiGard (gray) Quick-Applied Pipe Seals are available in one size: 1” to 6”

9. **VersiGard/VersiGard White Quick-Applied Pourable Sealer Pocket**: A pre-fabricated Pourable Sealer Pocket which consists of a 2" wide plastic support strip with Quick-Applied, adhesive backed uncured Flashing; black available in 4", 6" and 8" diameters for VersiGard (black) EPDM, 6” diameter for Sure-Seal (gray) and 6” and 8” diameter for VersiGard White.

B. **SEAM TAPES, PRIMERS, ADHESIVES AND SEALANTS/CLEANERS**

Refer to Technical Data Bulletins for material coverage rates and proper usage. Prior to the use of any of the products listed below, consult the Material Safety Data Sheets for applicable cautions and warnings.

1. **VersiGard QA Seam Tape** – A 3” or 6” wide by 100’ long Splice Tape used for splicing adjoining sections of EPDM membrane. 6” wide splice tape is used for Mechanically Attached Roofing Systems and 20-year Warranty Systems. Complies with the South Coast Air Quality Management District Rule 1168.

2. **Versico V-150 Primer** – A solvent-based primer used to prepare the surface of EPDM membrane for application of QA Seam Tape or Quick-applied products. Available in 1 gallon pails and pressurized cylinders.

3. **Low-VOC EPDM and TPO Primer** – A Low-VOC (volatile organic compound) primer (less than 250 grams/liter) for priming EPDM or TPO surfaces prior to application of QA Seam Tape or Quick-applied products. Available in 1 gallon pails and in pressurized cylinders.

4. **Versico’s Lap Sealant** – A heavy-bodied material used at splice intersections beneath “T”-joint covers, at cut edges of reinforced EPDM membrane and around uncured Quick-applied accessories.

5. **Versico Weathered Membrane Cleaner** – A clear, solvent-based cleaner used to loosen and remove dirt and other contaminants from the surface of exposed EPDM membrane prior to applying Versico EPDM Primer. Available in 1 and 5-gallon pails.

6. **Low-VOC Membrane Cleaner:** A Low-VOC (volatile organic compound) cleaner (100% EPA-exempted solvents) used to loosen and remove dirt and other contaminants from the surface of exposed EPDM membrane prior to applying Versico EPDM Primer. Available in 1 and 5-gallon pails.

7. **G200-SA Yellow Substrate Adhesive** – A high-strength, yellow colored, synthetic rubber adhesive used for bonding VersiGard EPDM membranes to various surfaces.

8. **EPDM x-23 Low-VOC Bonding Adhesive** – A Low-VOC (volatile organic compound) bonding adhesive (less than 250 grams/liter) used for binding VersiGard/VersiGard White EPDM membranes to various surfaces. Adhesive is available in 5 gallon pails.

9. **Aqua Base 120 Bonding Adhesive**: A semi-pressure-sensitive water based adhesive; used as a 2-sided contact adhesive for bonding VersiGard EPDM membrane to various surfaces. Complies with the South Coast Air Quality Management District Rule 1168.

10. **CAV-GRIP 3V Low-VOC Adhesive/Primer:** a low-VOC, spray-applied aerosol contact adhesive and primer used for a variety of applications: adhering standard VersiWeld TPO and VersiGard EPDM membranes to horizontal and vertical surfaces, adhering VersiFleece membranes to vertical surfaces, as a primer for VapAir Seal 725TR, and as an unexposed asphalt primer for Flexible DASH for insulation attachment.

11. **G500 CM Water Cut-Off Mastic** – A one-component, low viscosity, self-wetting, butyl blend mastic used as a sealing agent between the EPDM membrane and applicable substrates.

12. **G-400 Pourable Sealer** – A black, two-component, solvent-free, polyurethane based product used for tie-ins and as a sealant around hard-to-flash membrane penetrating objects such as clusters of pipes and for daily seal when the completion of flashings and terminations cannot be completed by the end of each work day.

13. **One-Part Pourable Sealer** – A black, one-component, moisture curing, elastomeric polyether sealant used for attaching lightning rod bases and ground cable clips to the membrane surface and as a sealant around hard-to-flash penetrations such as clusters of pipes.

14. **Universal Single-Ply Sealant** – A one-part polyether, non-sagging sealant designed for sealing expansion joints, control joints and counter flashings. Available in white and gray.

2.05 Fastening Components

A. **Termination STRIPS (RTS)**

1. **VersiGard Quick-Applied RTS (**Reinforced Termination Strip): A 6" or 9" wide, nominal 45-mil thick clean, cured reinforced EPDM black membrane with 3" wide Quick-Applied Tape laminated along one edge for the 6" wide RTS and along both edges for the 9" wide RTS.

   a. **6" wide Quick-Applied RTS** is used horizontally or vertically at the base of walls, curbs, etc., in conjunction with Fastening Plates or Bars below the EPDM deck membrane for additional membrane securement.

   b. **9" wide Quick-Applied RTS** is utilized for perimeter membrane securement on VersiGard mechanically attached roofing systems and primary securement on Metal Retrofit Roofing Systems.

2. **VersiGard White Quick-Applied RTS** (Reinforced Termination Strip) – A 6" wide, nominal 45-mil thick clean, cured, reinforced EPDM membrane with 3" wide Quick-Applied Tape laminated along one edge. Used on VersiGard white fully adhered roofing systems.

B. **Fasteners**

The following Table illustrates criteria for fastening of Versico Insulation with the referenced roof deck and include minimum penetration requirements and pilot hole criteria.

Deck Type	Versico Fasteners (1)	Min. Penetration	Pilot Hole Depth	Pilot Hole Diameter
Steel or Lightweight Insulating Concrete over Steel	ASAP or InsulTite™	3/4"	N/A	N/A
Structural Concrete, rated 3,000 psi or greater	CD-10	1"	Note (2)	7/32"
	MP 14-10	1"	Note (2)	3/16"
Wood Plank, min. 15/32" thick Plywood or min. 7/16" OSB	HPV, ASAP or InsulTite	Min. 1" (3)	N/A	N/A
Cementitious Wood Fiber	Polymer Gyptec	1-1/2"	Note (4)	N/A
Cementitious Wood Fiber	Lite-Deck Fastener	2"	Note (4)	N/A
Gypsum	Polymer Gyptec	1-1/2"	Note (2)	7/16", 1/2" or 9/16" (5)
Gypsum	Lite-Deck Fastener	2"	Note (5)	Note (6)

Notes: N/A = Not Applicable
(1) Only 3" diameter insulation fastening plates can be used for insulation attachment.
(2) The pilot hole must be predrilled to a sufficient depth to prevent contact between the fastener point and any accumulated dust in the predrilled hole. This will help prevent bottoming out of the fastener during installation.
(3) For wood planks only, fastener penetration shall not exceed 1-1/2".
(4) Most cementitious wood fiber decks do not require pre-drilling; however, Versico should be contacted prior to installation for verification of specific types that may require a pilot hole to be predrilled.
(5) Pilot hole size may be varied to maximize pullout resistance.

(6) Gypsum hardness varies, and the desired pullout may determine pilot hole size. This could range from ¼" to 5/16.

All VersiGard Fasteners listed below can be used with VersiGard (black and white) Roofing Systems. Refer to the applicable specification for specific requirements.

1. **HPV Fastener** – A threaded E-coat square head fastener for insulation and reinforced membrane attachment (mechanically attached systems) in conjunction with 2" diameter Polymer Seam Plates. Used into steel, wood plank, minimum 15/32" thick plywood or minimum 7/16" thick oriented strand board (OSB).

2. **HPV-XL Fastener** – An oversized diameter (.315") steel, threaded fastener used in conjunction with HPV-XL Polymer Seam Plates for membrane securement into minimum 22 gauge steel or wood decks on mechanically attached roofing systems.

3. **InsulTite ASAP** – Versico's InsulTite Fastener pre-assembled with a 3" diameter plate used for insulation attachment only on fully adhered and mechanically attached roofing systems.

4. **InsulTite Fasteners** – A threaded Philips drive fastener used with Versico Insulation Plates for insulation attachment to steel or wood decks.

5. **MP 14-10 Concrete Fastener** – A #14 threaded fastener with a #3 Philips driver used for minimum 3,000 psi concrete decks.

6. **CD-10 Nail-In Fastener** – A hammer-driven, non-threaded E-Coat Fastener for use with structural concrete decks rated 3,000 psi or greater.

7. **Polymer Gyptec Fastener** – A non-penetrating, plastic fastener and corresponding plate used with lightweight deck substrates such as fibrous cement and gypsum.

8. **Term Bar Nail-In** – A 1-1/4" long expansion anchor with threaded drive pin used for fastening VersiGard Termination Bar or Seam Fastening Plates to concrete, brick or block walls. The fastener is set by hammering the drive pin into place.

9. **Lite-Deck Fastener:** A deep, coarse threaded fastener used to secure insulation to gypsum and cementitious wood fiber decks in conjunction with Lite-Deck Plates.

C. **Fastening Plates and Bars**

1. **Polymer Seam Plate** – A 2" diameter plastic barbed fastening plate used with Versico HPV Fasteners for membrane and Quick- Applied RTS securement for mechanically attached roofing systems over steel roof decks.

2. **HPV-XL Plate** – A 2-3/8" diameter plastic barded listening plate used with HPV-XL Fasteners for membrane and Quick -Applied RTS securement for mechanically attached roofing systems over steel roof decks.

3. **Seam Fastening Plates** – A 2" diameter metal plate used for insulation attachment on mechanically attached roofing systems or membrane securement on fully adhered roofing systems in conjunction with the appropriate Versico Fastener.

4. **Insulation Fastening Plates** – A nominal 3" diameter metal plate used for insulation attachment in conjunction with the appropriate Versico Fastener.

5. **SecurFast Insulation Fastening Plates:** A nominal 2-7/8" hexagon metal plate used for insulation attachment in conjunction with the appropriate Versico Fastener.

6. **Accutrac Insulation Plates:** A nominal 3" square, recessed or flat bottomed, metal plate used for insulation attachment in conjunction with the appropriate Versico Fastener. Flat bottom plate is used with manufactured Philips Head fasteners only.

7. **Gyptec Plates** – A 3" (26-gauge) steel plate for insulation and a 2" (22 gauge) steel plate for membrane attachment. The plates are stamped Galvalume-coated steel.

8. **Polymer Batten Strip** – A 1" wide by 1/20" thick polymer bar which is pre-punched 6" o.c. packaged in 250' long coils used for membrane securement on mechanically attached roofing system in conjunction with HPV or HPVX Fasteners. Refer to applicable Technical Data Bulletin.

9. **Metal Fastening Bar** – A 1" wide metal bar which is pre-punched 6" o.c. and packaged in 10' long strips to be used for membrane securement on mechanically attached roofing systems.

2.06 Insulation Securement Adhesive

1. **Flexible DASH Adhesive** – A spray (full coverage) or bead-applied, two-component polyurethane, construction grade, low-rise expanding loam adhesive used for attaching approved insulations to compatible roof decks or existing smooth or gravel surfaced BUR, modified bitumen or cap sheets. Available in 50 gallon and 15 gallon drums.

2. **Flexible DASH Dual Tank:** A two component (Part A and B), extrusion applied, low rise adhesive for bonding insulation to various surfaces. Flexible DASH Dual Tanks utilize an HFO blowing agent. HFO (hydrofluoroolefin) blowing agents are widely recognized as the next-generation environmentally friendly blowing agent, replacing their HFC (hydrofluorocarbon) predecessor. When extruded at 12" on center the coverage rate is 3,500 to 3,700 sq.ft. per set of Dual Tanks.

3. **Flexible DASH Dual Cartridge and 5-gallon Jug Adhesive:** A two component (Part A and B), extrusion applied, low rise adhesive for bonding insulation to various surfaces. When extruded at 12" on center the coverage rate is 400-600 sq.ft. per carton of Dual Cartridges or 2,000-2,500 sq.ft. per set of 5-gallon Jug Adhesive.

4. **OlyBond 500™ Bag in a Box** – A two-component, polyurethane, low-rise expanding adhesive used to bond insulation to various substrates. Packaged in 5-gallon boxes of Part A and Part B formulations that are applied using a mechanical dispense system. Applied in 1/2" to 3/4" beads or ribbons at the rate of 1 gallon per 150-250 square feet for 12" o.c. bead spacing. Perimeter bead spacing patterns and acceptable insulation and deck types are listed in the applicable Technical Data Bulletin.

5. **OlyBond 500 BA Spot Shot** – A two-component, polyurethane construction grade, low-rising expanding adhesive designed for bonding insulation to various substrates. Applied in 1/2" to 3/4" beads or ribbons using a portable 1:1 applicator (oversized, dual-cartridge caulking gun). Refer to the Technical Data Bulletin for bead spacing with reference to building height.

2.07 Vapor/Air Barrier

A. General

The use of a vapor retarder to protect insulation and reduce moisture accumulation within an insulated roofing assembly should be investigated by the specifier, especially on projects with high interior humidity, such as, swimming pools, breweries, pulp mills, etc.

If insulation is to be fully adhered to the vapor retarder with Flexible DASH Adhesive, the vapor retarder must be compatible and shall be fully adhered to the substrate. Available products include Versico's VapAir Seal 725TR Air and Vapor Barrier, VapAir Seal MD Air and vapor Barrier and spray or roller applied Butyl coatings. Installation requirements for Versico's VapAir Seal 725TR Air and Vapor Barrier are identified in **Spec Supplement G-07-20 "Application Procedures for 725TR Air and Vapor Barrier"** and Versico's VapAir Seal MD Air and Vapor Barrier are identified in **Spec Supplement G-12-19 "Application Procedures for Versico's VapAir Seal MD Air and Barrier"** in the Versico Technical Manual.

1. **Versico 725TR Temporary Roof Air and Vapor Barrier** – A 40-mil thick composite consisting of 35-mil self-adhering rubberized asphalt membrane laminated to a 5-mil UV resistant poly film with an anti-skid surface which is fully compatible with Flexible DASH Adhesive. 725TR can also function as a temporary roof for up to 120 days. Available in rolls 39" wide by 100' long (325 square feet).

2. **Versico VapAir Seal MD Air and Vapor Barrier** – a reinforced composite aluminum foil with self-adhesive SBS backing and removable poly release film. Used for direct application over metal decks. Available in rolls 42.5" wide by 131.23" long (460 square feet).

3. **CAV-GRIP 3V Low-VOC Adhesive/Primer:** a low-VOC, spray-applied aerosol contact adhesive and primer used for a variety of applications: adhering standard VersiWeld TPO and VersiGard EPDM membranes to horizontal and vertical surfaces, adhering VersiFleece membranes to vertical surfaces, as a primer for VapAir Seal 725TR, and as an unexposed asphalt primer for Flexible DASH for insulation attachment.

4. **CCW-702 Primer and 702LV Primer (Low-VOC)** - A single component, solvent based, high-tack primer used to provide maximum adhesion between Versico 725TR Air and Vapor Barrier and an approved substrate. Applied by spray or long nap roller with a coverage rating ranging from approximately 300 to 350 square feet per gallon on smooth finishes (i.e., concrete) to 75 square feet per gallon on porous surfaces (i.e., Dens-Deck Prime gypsum board). Available in 5-gallon containers. CCW-702LV Primer contains less than 250g/L VOCs and meets South Coast Air Quality Management District (SCAQMD) and Leadership in Energy and Environmental Design (LEED) Requirements for Volatile Organic Compounds.

5. **CCW-702WB –** a high-tack, water-based contact adhesive for promoting adhesion of Versico air/vapor barrier membranes and an approved substrate (i.e., concrete, Dens-Deck Prime and Securock). Applied by roller, brush or spray with an application rate of approximately 200 sq. ft. per gallon. Available in 5-gallon containers. CCW-702WB Primer contains 57g/L VOCs and meets South Coast Air Quality Management District (SCAQMD) and Leadership in Energy and Environmental Design (LEED) Requirements for Volatile Organic Compounds.

2.08 Edges And Terminations

A. **General**

Products listed below can be used with any of the available Versico Roofing Systems. Refer to the applicable Versico details and installation instruction manuals for specific installation criteria.

B. **Products**

1. **VersiTrim 200** – A snap-on edge system consisting of a 24 gauge galvanized metal dam and 40, 50 or 63-mil thick aluminum Kynar 500, clear and colored anodized finish or 22 or 24 gauge steel, Kynar 500 finish. The fascia is available in a variety of colors and heights varying from 5” to 12-1/2”. Custom fascia and colors are available upon request. ANSI/SPRI ES-1 certified.

2. **VersiTrim 300 Fascia** is a two-part assembly that includes a continuous 24-gauge, galvanized steel spring clip and a decorative snap-on cover, available in .063" (1.60 mm) or .050" (1.25 mm) aluminum and 24-gauge Kynar 500 coated galvanized steel. Custom fascias and colors are available upon request. ANSI/SPRI ES-1 certified.

3. **VersiTrim 400 Fascia** is a two-part assembly that includes a continuous 22-gauge continuous cleat and a decorative snap-on cover, available in pre-painted Kynar 500-coated .040" formed aluminum and 24-gauge Galvalume steel. Additional gauges are available upon request. ANSI/SPRI ES-1 certified.

4. **VersiTrim 2000** – An anchor bar roof edge fascia system consisting of heavy .100” thick extruded aluminum bar, corrosion resistant stainless steel fasteners and snap-on fascia cover used with fully adhered, mechanically attached and ballasted assemblies. Refer to installation instructions for various sizes, colors and accessories ANSI/SPRI ES-1 certified.

5. **VersiTrim 3000** – A metal anchor bar fascia system consisting of a 20 gauge steel retainer bar, corrosion resistant fasteners and an aluminum or 24 gauge steel snap-on fascia cover. It is for use in fully adhered and mechanically attached roofing systems, ANSI/SPRI ES-1 certified.

6. **SecurEdge 4000:** A two-piece assembly that includes a continuous cleat and a decorative fascia cover. Available in pre-painted Kynar 500-coated 0.40” formed aluminum and 24-gauge Galvalume steel, this product features 22-gauge pre-punched cleats with fasteners spaced at 12” on center. ANSI/SPRI ES-1 certified.

7. **Versico Drip Edge**: Designed for use on Fully Adhered and Mechanically Attached Roofing Systems. Includes a 22 gauge continuous 12' pre-punched 90-degree angle cleat and 12' long fascia sections. Incorporates concealed joint covers and strong 1-1/4" ring shank nails to provide long-term holding power. A selection of colors in 24 gauge steel, Kynar® 500 and 32-mil aluminum finish or Kynar 500 is available.

8. **Versico Ballast Retaining Bar** – A ballast retaining perimeter securement system comprised of a slotted (4” on center) extruded mil aluminum retention bar with an integrated compression fastening strip. 1-1/2” stainless steel fasteners with Neoprene washers are provided for stable securement.

9. **Termination Bar** – A 1” wide and 98-mil thick extruded aluminum bar pre-punched 6” on center which incorporates a sealant ledge to support Lap Sealant and provide increased stability for membrane terminations.

10. **VersiTrim Term Bar Fascia:** A 1.75” wide formed aluminum termination bar with pre-slotted fastening holes for ease of locating and installing. The decorative cover is available in 0.040” aluminum or 24-gauge galvanized steel. VersiTrim Term Bar Fascia is manufactured in 12’ lengths for fewer joints/seams, fewer sections to handle and faster installation.

11. Other Versico Metal Edging/Copings suitable for use with roofing system included in the section can be found in the S**pecification Supplement G-11-20 Metal Edging.**

2.09 Roof Walkways

Walkways are to be specified at all traffic concentration points (i.e., roof hatches, access doors, rooftop ladders, etc.), and if regular maintenance, once a month or more, is necessary to service rooftop equipment.

1. **Walkway Types:**

a. **Versico (White, Gray or Black) Pressure-Sensitive Molded Walkway Pads:** Versico molded walkway pads with factory applied Quick-Applied Tape are used to provide protection for areas of EPDM membrane that are exposed to regular rooftop maintenance.

b. **Versico Interlocking Rubber Pavers:** 24" x 24" x 2" thick rubber paver weighing approximately 24 pounds per unit, 6 pounds per square foot manufactured from recycled rubber, which provides a resilient, shock absorbing, weather resistant surface. Designed primarily for use as a walkway or on terrace areas offering a unique, environmentally sound advantage over concrete pavers. Features include freeze/thaw stability, bi-directional drainage and no breakage concerns. Available in black and terra cotta.

c. **Hanover Ballast and Lightweight Ballast Pavers:** The standard, 24" x 24" x 1-13/16" thick, Ballast Paver comes in a natural color and a non-slip Diamond finish and weighs 22 lbs/sq. ft. The Lightweight, 23-1/2" x 23-1/2" x 1-1/4" thick, Ballast Paver comes in a natural color and a non-slip diamond finish and weighs 15 lbs/sq. ft. Both pavers can be used as ballast or walkways.

2.10 Other Versico Accessories

Refer to **Spec Supplement P-01-22 "Related Products"** for additional accessories.

Part III- Execution

Prior to commencing with the installation of any of the EPDM Membrane Systems refer to Paragraph 1.05 "Warranty Tables" for applicable components and proper securement method suitable for the appropriate warranty coverage.

Requirements listed in this specification are considered minimum and are intended for the sole purpose of obtaining a Versico Warranty. Additional requirements dictated by Regulatory Agencies, Building Insurance or Specifiers must be complied with and are considered to be beyond the scope of this specification.

3.01 General

A. Safety Data Sheets (SDS) must be on location at all times during transportation, storage and application of materials. The contractor shall follow all safety regulations as recommended by OSHA and other agencies having jurisdiction.

B. Subject to project conditions, it is recommended to begin the application of this roofing system at the highest point of the project area and work to the lowest point to prevent water infiltration. This will include completion of all flashings, terminations and daily seals.

C. A proper substrate shall be provided by the building owner. This structure shall be sufficient to withstand normal construction loads and live loads.

3.02 Roof Deck/Substrate Criteria

A. Proper decking shall be provided by the building owner. The building owner or their designated representative must ensure that the building structure is investigated by a registered engineer to assure its ability to withstand the total weight of the specified roofing system, as well as construction loads and live loads, in accordance with all applicable codes. The specifier must also designate the maximum allowable weight and location for material loading and storage on the roof.

B. When insulation is mechanically fastened to the roof deck, withdrawal resistance tests are strongly suggested to determine the suitability of the roof deck. Refer to **Design Reference DR-06-19 "Withdrawal Resistance Criteria"** in the Versico Technical Manual proper procedures for conducting pullout tests.

C. Defects in the substrate surface must be reported and documented to the specifier, general contractor and building owner for assessment. The Versico Authorized Roofing Contractor shall not proceed with installation unless defects are corrected.

D. On structural concrete decks, when a vapor retarder is not used, gaps in the deck along the perimeter and around penetrations must be sealed along with vertical joints between tilt-up panels, if present, to prevent infiltration of hot humid air and possible moisture contamination resulting from condensation. This is specifically important when polyurethane adhesive is used to attach the roof insulation.

E. **For all projects** (new or retrofit), the substrate must be relatively even without noticeable high spots or depressions. Accumulated water, ice or snow must be removed to prevent the absorption of moisture in the new roofing components and roofing system.

F. Prior to the placement of membrane underlayment, clear the substrate of debris and foreign material that may be harmful to the roofing system. Gaps greater than 1/4" must be filled with an appropriate material.

G. For direct application over an acceptable roof deck/substrate or when HP Protective Mat is specified and approved by Versico as the membrane underlayment in accordance with the Roof Deck and Substrate Criteria Table, the substrate must be smooth, steel trowel finished (structural concrete), free of debris, protrusions, sharp edges and loose and foreign material. Cracks or voids in the substrate, greater than 1/4", must be filled with an appropriate material.

H. **On retrofit - recover projects**, cut and remove wet insulation, as identified by the specifier, and fill all voids with new insulation of type specified so it is relatively flush (+/- 1/4") with the existing surface.

1. Entrapment of water between the old and new membrane can damage and deteriorate new insulation/underlayment between the two membranes. **If a vapor retarder or air barrier is not specified**, Versico recommends the existing membrane be perforated to avoid potential moisture accumulation and to allow the detection of moisture to enable the building owner to take corrective action. This can be accomplished by drilling approximately 3/4" diameter holes every 100 square feet in the existing built-up roof or single-ply membrane (excluding PVC membrane).

2. **For existing PVC membranes**, if the membrane is not removed, it must be cut into maximum 10' by 10' sections. All PVC flashings at the perimeter, roof drains and roof penetrations must be removed.

3. When installing this roofing system over an existing **gravel surfaced built-up roof**, **loose gravel must be removed**. Power brooming is recommended by Versico to remove the loose gravel, which may trap moisture. Any uneven areas of the substrate must be leveled to prevent insulation from bridging.

4. On retrofit projects, all existing phenolic insulation must be removed.

5. Refer to table below for other Recover/Retro-fit considerations

I. The following table identifies the **acceptable roof decks/substrates** and the **minimum underlayment** requirements for Versico's EPDM Roofing Systems.

Note: Refer to the Warranty Tables, Paragraph 1.05, of this specification, for the minimum underlayment requirements for a specific Warranty Coverage.

Roof Deck & Substrate Criteria

Certain warranty restrictions apply for projects with warranties greater than 15 YR. Refer to Table V 'Re-roofing Substrate Criteria' for warranty limitations in paragraph 1.05.

Acceptable Roof Deck/Substrate	**EPDM Membrane**		
NEW CONSTRUCTION	Fully Adhered - Design "A"	Ballasted - Design "B"	Mechanically Attached
Steel (min. 22 gauge)(1)(2)	Insulation	Insulation	Insulation
Structural Concrete (min. 3000 psi)	Direct Application (11)	Insulation	HP Protective Mat (10)
Plywood (min. 15/32" thick) or Oriented Strand Board (min. 7/16" thick)	Direct Application (11)	Insulation	Direct Application (11)
Wood Planks (minimum 3/4" thick)	Direct Application	Insulation	Direct Application (11)
Fibrous Cement	Insulation	Insulation	HP Protective Mat
Lightweight Insulating Concrete	**Note 3** (10)	Protective Mat (10)	Direct Application (10)
RETROFIT / NO TEAR-OFF	Fully Adhered - Design "A"	Ballasted - Design "B"	Mechanically Attached
Existing Smooth Surface BUR or Mineral Surface Cap Sheet	Direct Application (4)(11)	Insulation	Direct Application (4)(11)
Gravel Surfaced BUR (5)	Insulation	Insulation	Insulation
Coal Tar Pitch (5)(6)	Insulation (9)	Insulation	Insulation
Modified Bitumen	Direct Application (8)(11)	Insulation	Direct Application (8)(11)
Existing Single-Ply	Insulation	Insulation (7)	Direct Application (7)(11)
Sprayed-in-place Urethane	Complete Tear-off Required	Insulation	Complete Tear-off Required
RETROFIT / TEAR-OFF	Fully Adhered - Design "A"	Ballasted - Design "B"	Mechanically Attached
Existing roof material removed (regardless of deck type)	Insulation	Insulation	Insulation

Notes:

(1) Local codes must be consulted regarding thermal barrier requirements.

(2) Mechanically Attached Systems cannot be specified on steel decks less than 22 gauge or for corrugated steel decks, regardless of gauge.

(3) The Design "A" Fully Adhered Roofing System may be specified directly over a new approved cellular or perlite lightweight insulating concrete substrate with a minimum compressive strength of 225 psi. Except when the lightweight insulating concrete is poured over slotted steel decks, pressure relief vents must be specified at a minimum rate of 1 every 2000 square feet. Direct Application is not permitted where the lightweight concrete is poured over an existing roofing material. Refer to **Spec Supplement G-03-20 "Fully Adhered Application Over Lightweight Insulating Concrete".**

(4) VersiGard Black Fully Adhered and Mechanically Attached Systems may be applied directly to the substrate provided asphalt on existing smooth surfaced built-up roof has a softening point above 185°F (85°C). VersiGard White Roofing Systems are not recommended for direct application to the substrate due to possible staining of the membrane surface. For direct application over smooth BUR or granule surface BUR or in conjunction with HP Mat make sure substrate is clean and free of roofing cement and fresh asphalt to avoid sheet contamination and staining of white color membrane.

(5) Loose gravel must be removed to avoid entrapment moisture.

(6) Existing coal tar could drip back into the building, especially when new insulation does not provide sufficient thermal value to prevent the surface of the coal tar from softening.

(7) An approved Insulation/underlayment is required over existing ballasted single-ply systems and PVC roofing systems of any type.

(8) Direct application permitted over smooth surfaced modified bitumen. Membrane shall be positioned with length of sheets parallel to modified bitumen field seams. At end laps or other locations where EPDM splices intersect modified bitumen field seams, 6" wide Uncured or Quick- Applied Flashing must be applied over intersections.

(9) If insulation is specified to be secured to an existing coal tar pitch roof with Versico Flexible DASH Adhesive or hot asphalt, minimum 1.5" thick Polyisocyanurate insulation is the required minimum thickness when VersiGard Black EPDM is specified. Minimum 1" thick Polyisocyanurate is the required minimum thickness when VersiGard White EPDM is specified.

(10) For direct application. Membrane system warranties are limited to 15 YR unless specifically approved by Versico.

(11) Maximum warranty available is 20 YR with 55 MPH peak gust wind speed coverage (72 MPH peak gust wind speed coverage over structural concrete, wood planks or plywood) peak gust wind speed coverage. Versico may be contacted for other options.

J. **Vapor Retarder Installation**

For Versico's Vapor Retarder refer to **Spec Supplement G-07-20 "Application Procedures for 725TR Temporary Roof Air and Vapor Barrier".** Follow the respective vapor retarder manufacturer's recommended installation procedures and the specifier's instructions for the installation of the product specified. When insulation is to be set in adhesive, verify compatibility with Versico when Vapor Retarder by others is specified.

K. **Wood Nailers**

1. Install wood nailers in locations that have been designated by the specifier and as approved by Versico. Refer to **Design Reference DR-08-11 "Wood Nailers and Securement Criteria"** for Wood Nailer Criteria.

2. Wood nailers are not covered by the Versico Warranty.

3.03 Insulation/Underlayment

A. **General**

1. Roof insulation thickness must be determined by the thermal value required for each project and may be subject to code approval limitations. On projects where a vapor retarder is used, the specifier must calculate insulation thickness to ensure the temperature at the vapor retarder will not fall below the dew point.

2. For new construction projects in cold climate regions, the use of vapor retarders or air barriers is strongly recommended to protect insulation from moisture generated during construction.

3. Multiple layers of insulation are recommended with all joints staggered between layers.

4. Do not install more insulation/underlayment than can be covered by membrane in the same day.

5. All insulation boards must be butted together with no gaps greater than 1/4". Gaps greater than 1/4" are not acceptable.

6. Restrictions:

   a. Versico Roofing Systems cannot be specified in conjunction with Phenolic Insulation.

   b. Fiberglass insulation cannot be specified with Versico's Design "A" Fully Adhered and Mechanically Attached Roofing Systems, even if overlaid with additional insulation or membrane underlayment.

   c. Do not specify perlite boards directly under the EPDM membrane on Design "A" Fully Adhered or Mechanically Attached Roofing Systems.

   d. Wood fiberboard manufactured by others is not an acceptable underlayment for use with Design "A" Fully Adhered Roofing Systems unless approved in writing by Versico prior to installation.

   e. For all EPDM Roofing Assemblies, the use of insulation by others is not acceptable when a Versico Membrane System Warranty is specified. Versico insulation must be used.

3.04 Insulation Attachment

A. **General**

1. Prior to proceeding with insulation securement refer to Warranty Tables, Paragraph 1.05, for attachment method and appropriate fastening density required for the specific Versico Warranty.

B. **Fully Adhered Roofing Systems**

1. **Mechanical Attachment**, insulation fastening density will vary based on insulation type, thickness, and required warranty. Warranty Tables in Paragraph 1.05 should be referenced for fastening density and the appropriate Versico detail may be consulted to identify acceptable fastening pattern.

a. For code compliance, increased fastening density may be required depending upon project wind speed and wind uplift requirement. Refer to **Design Reference DR-05-23 "Insulation Fastening Patterns"** for fastening pattern reference.

b. When insulation securement is to comply with Factory Mutual (FM) approvals, follow the requirements of the specifier concerning additional securement at the roof perimeter and corners. Also refer to **Design Reference DR-05-23 "Insulation Fastening Patterns"** for various fastening patterns.

c. On Reroof/No Tear off projects with a maximum roof height of 40', any Versico Insulation (i.e., 1/2" SecurShield HD, Recovery Board, Polyisocyanurate less than 1-1/2" thick) may be secured at the minimum rate of 11 Fasteners per 4' x 8' board (5 Fasteners per 4' x 4' board).

d. When Oriented strand board (OSB) is specified for membrane underlayment, utilize DuraFaceR OSB/Polyiso Composite, mechanically fastened to the deck at the rate 17 fasteners for 4 x 8 board in accordance with Versico Details. When positioning OSB, butt edges and stagger joints of adjacent panels.

2. **Adhesive attachment**, Versico Urethane Adhesive Full Spray (Flexible DASH) or Bead (Flexible DASH or Olybond) may be used. When bead adhesive is specified bead spacing will vary based on Warranty coverage, refer to Warranty Tables, Paragraph 1.05 and appropriate Versico Details. CAUTION: Apply adhesive bead so that the distance from the edge of the board does not exceed half the bead spacing (i.e. within 6" of bead spacing of 12" O.C.).

CAUTION: Do not apply urethane adhesives directly to un-weathered asphalt, (new or residual)

CAUTION: Especially in cold regions on tear-off projects or new construction gaps between horizontal and vertical surfaces of the roof area as well as gaps around penetrations must be sealed to prevent interior warm air from infiltrating and condensing within the roofing assembly. Condensing moisture could weaken bottom insulation facer and eventually result in dislodgement or loose boards when adhesive is used.

a. On FM Global insured projects, consult FM Global's local representative concerning the use of adhesive to attach insulation to steel decks.

b. Check to ensure the substrate is dry. Adhesive cannot be applied to a wet or damp surface.

c. Apply Adhesive over the dry substrate area at the coverage rates indicated in **Spec Supplement G-02-20 "Adhesive Application/Coverage Rate".**

d. Allow the adhesive to rise up approximately 1/8" to 3/4", depending on dispensing method, and develop strings prior to setting insulation boards into adhesive.

NOTE: String-time is measured by touching the adhesive with a splice wipe and looking for development of "strings" of adhesive as you pull the splice wipe out of the adhesive. With Flexible DASH Adhesive, string time is generally around 1-1/2 – 2 minutes after application at room temperature.

e. **Walk the boards into the adhesive and roll using the 30" wide, 150 pound segmented steel roller** to ensure full embedment. Optimal set up time should be approximately 5 to 7 minutes.

CAUTION: Walking on the boards immediately after placement in adhesive can cause slippage/movement until the adhesive has started to set up.

CAUTION: If the boards easily slide, string time has not been achieved.

On roofs with a slope greater than 1/2" in 12", begin adhering insulation at the low point and work upward to avoid slippage.

One person should be designated to walk/roll in all boards. Relief cuts may be necessary to allow lifted board to lay flat, or constant weight (a minimum 10 lbs for 5-15 minutes per lifted area) may be necessary to achieve adequate adhesion.

3. **Alternate attachment method**, the specifier may select an alternate insulation attachment that incorporates a solid mopping of the insulation with hot asphalt (ASTM D312, Type III or IV). If the attachment method is to be covered by the Versico Warranty, Versico must be contacted for specific requirements. Upon review and acceptance by Versico, the maximum warranty coverage available is limited to 20 Year with maximum Peak Gust Wind Speed Coverage of 72 mph.

a. Extruded or Expanded Polystyrene insulation are not acceptable when this alternate attachment method is specified.

b. The existing gravel surfaced built-up roof must be scraped to remove all loose gravel. Large blisters that may prevent continuous embedment of insulation must be repaired. The surface of the substrate must also be dry and clear of foreign material.

c. On coal tar pitch, when deemed compatible by the specifier, minimum 1.5" Polyisocyanurate is the required membrane underlayment when using VersiGard Black membrane. If VersiGard White membrane is used, minimum 1" thick Polyisocyanurate is required.

d. For successful attachment, proper asphalt temperatures must be maintained and the specifier's requirements concerning the installation of a base sheet (where required) and quantity of hot asphalt must be followed.

e. The maximum insulation board size shall not exceed 4' X 4'. Trim insulation boards around crickets and saddles to ensure continuous embedment.

f. Care must be exercised to prevent contamination of the top surface of the insulation. Asphalt oozing through insulation joints must be wiped from the surface. Contact with fresh asphalt can result in discoloration of the VersiGard White membrane.

g. Use of a grid nailer, subdividing the roof in individual sections of 2400 square feet is not required for, but its use is strongly recommended.

h. The wood nailers are installed relatively flush with the insulation surface and the membrane is to be fastened with seam fastening plates and Versico HPV fasteners on 12” o.c. For wood nailer installation, refer to **Design Reference DR-08-11 “Wood Nailers and Securement Criteria”.**

C. **Ballasted Roofing Systems**

1. Insulation boards shall be loose laid over the substrate.

2. Refer to Roof Deck/Substrate Criteria in Paragraph 3.02 for further information.

NOTE: The use of cover boards, such as SecurShield HD, SecurShield HD Plus, DensDeck, DensDeck Prime, DensDeck StormX Prime or Securock, is not permitted in conjunction with Ballasted Assemblies to reduce possible membrane punctures. Hard cover boards do not provide sufficient cushioning beneath the membrane and therefore when the assembly is subjected to traffic, the membrane is subjected to higher point loading resulting in puncture.

D. **Mechanically Attached Roofing System**

1. **Versico Fasteners and Fastening Plates are required for insulation securement**. Refer to Insulation Fastening Criteria Table in Paragraph 2.05, for appropriate fastener and deck penetration. The fastener can be used either 2" diameter VersiGard Seam Fastening Plates or 3" diameter VersiGard Insulation Fastening plate.

2. **Any Versico approved insulation or cover board** shall be Mechanically Attached to the roof deck at the minimum rate of **1.25 fastener and plate per every 8 square feet** (5 fasteners in a 4 x 8 board) for warranties up to 15 years. Projects with up to 20 year or greater warranties (with standard wind speed coverage) require the use of 6 fasteners and plates in a 4’ x 8’ board (1 per 5.333 square feet).

CAUTION: **Versico Polyisocyanurate Insulation with a thickness less than 1.5" installed over an existing roofing membrane without a tear-off** must be Mechanically Attached to the roof deck with a minimum of **1 fastener and plate for every 4 square feet** or less of insulation.

3. Use of DensDeck, DensDeck Prime and DensDeck StormX Prime should be limited to assemblies with slopes greater than 2” per foot to ensure compliance with external fire codes, care shall be exercised to ensure Polymer Seam Plates are fully seated.

3.05 Membrane Placement and Securement

A. **General**

1. **Ensure** that water does not flow beneath any completed sections of the membrane system by completing all flashings, terminations and daily seals by the end of each workday.

2. **Sweep** all loose debris from the substrate.

3. If aesthetics is of concern when VersiGard White EPDM is to be used, protection should be specified to avoid discoloration of the white membrane surface resulting from adhesive residue.

4. Adjoining sheets of EPDM membrane are spliced together using QA Seam Tape and Primer.

5. In addition to the primary membrane securement (Bonding for Fully Adhered, Ballasting for Ballasted Systems and Fastening for Mechanically Attached Assemblies), Additional membrane securement is required at the perimeter of each roof level, roof section, curb, skylight, interior wall, penthouse, etc., at any inside angle change where slope or combined slopes exceed 2" in one horizontal foot, and at other penetrations in accordance with the applicable Versico details. Refer to Paragraph G for additional membrane securement.

B. **Membrane Placement**

EPDM membrane with factory-applied tape is available in various widths. Prior to unrolling sheets ensure the tape side is properly located so that seams are properly shingled down slope. (Pre-applied QA Seam Tape should always be facing downwards once the sheet is unrolled).

1. **Position** EPDM membrane over the acceptable substrate without stretching. For Mechanically Attached assemblies, ensure the proper number of perimeter sheets are properly positioned along the perimeter of the roof. And field sheets are positioned perpendicular to the steel deck flutes.

2. **Allow** the membrane to relax approximately 1/2 hour prior to splicing (Ballasted systems), bonding (Fully Adhered Systems) or fastening (Mechanically Attached systems).

3. **Place** adjoining membrane sheets in the same manner, overlapping edges appropriately to provide for the minimum splice width (2-1/2” or 5-1/2” depending on warranty duration). It is recommended all splices be shingled to avoid bucking of water.

C. **Membrane Securement/Bonding – Fully Adhered Roofing System (G200SA, x-23 LVOC, Low-VOC Bonding Adhesive or Aqua Base 120)**

1. **Adhere** EPDM membrane to an acceptable substrate with Versico EPDM bonding adhesive. Comply with Labels, Safety Data Sheet (SDS) and Technical Data Bulletins for installation procedures and use. A contact type adhesive must be applied to both the membrane and the surface to which it is being bonded.

2. On projects at high altitudes (6,000’ and above), rapid flash-off (drying) of EPDM Adhesive and Primers will occur due to low atmospheric pressure.

3. **Fold** membrane sheet back so half of the underside of the sheet is exposed. Sheet fold should be smooth without wrinkles or buckles.

4. **Stir** EPDM Adhesive thoroughly scraping the sides and the bottom of the can (minimum 5 minutes stirring is recommended). Bonding surfaces must be dry and clean.

   CAUTION: If aesthetics is of concern when VersiGard White EPDM membrane is used, protect the white surface next to the edges of the folded membrane sheet so Adhesive will not discolor the white surface. Do not place Adhesive containers or their lids directly on the white surface of the VersiGard White EPDM membrane.

5. **Apply Bonding** Adhesive evenly, without globs or puddles, with a plastic core medium nap paint roller. A 9" roller will easily fit into the 5-gallon containers.

   Apply contact type bonding adhesive to both the membrane sheet and the substrate to achieve continuous coating of both surfaces at a coverage rate of approximately 120 square feet per gallon per one surface (membrane or substrate) or approximately 60 square feet per gallon per finished surface (includes coverage on both membrane and substrate). **Depending on adhesive used and the substrate type adhesive coverage rate will vary**. Refer to Technical Data Bulletin for the appropriate adhesive for the proper coverage rate.

   A mechanical roller dispenser or a mechanical sprayer can be used to apply Bonding Adhesive when the continuous coating and coverage rate noted above are maintained. When used, **the adhesive must be rolled after applying** with a plastic core medium nap paint roller to provide continuous coverage.

   CAUTION: Due to solvent flash-off, condensation may form on freshly applied Bonding Adhesive when the ambient temperature is near the dew point. If condensation develops, possible surface

contamination may occur and the application of Adhesive must be discontinued. Allow the surface to dry and apply a thin freshener coat at the coverage rate, which is approximately half of the coverage rate stated above to the previously coated surface when conditions allow for continuing.

6. **Allow** adhesive to flash-off until it is tacky but will not string or transfer to a dry finger touch.

7. **Roll** the coated membrane into the coated substrate while avoiding wrinkles.

8. **Brush** down the bonded half of the membrane sheet, immediately after rolling the membrane sheet into the adhesive, **with a soft bristle push broom** to achieve maximum contact.

9. **Fold** back the unbonded half of the membrane sheet and repeat the bonding procedure.

D. **Membrane Securement / Bonding - Adhered Roofing Systems (CAV-GRIP 3V)**

1. **Adhere** EPDM membrane to an acceptable substrate with CAV-GRIP 3V Bonding Adhesive. Comply with Labels, Safety Data Sheet (SDS) and Product Data Sheets for installation procedures and use. Contact type bonding adhesive must be applied to both the membrane and the surface to which it is being bonded.

2. On projects at high altitudes (6,000' and above), rapid flash-off (drying) of Bonding Adhesive and Primers will occur due to low atmospheric pressure.

3. **Fold** membrane sheet back so approximately half of the underside of the sheet is exposed. Sheet fold should be smooth without wrinkles or buckles.

4. **Connect CAV-GRIP 3V Cylinder** with hose and spray gun. Bonding surfaces must be dry and clean.

CAUTION: If aesthetics is of concern when VersiGard White EPDM membrane is used, protect the white surface next to the edges of the folded membrane sheet so Bonding Adhesive will not discolor the white surface. Do not place CAV-GRIP 3V Cylinders directly on the white surface of the VersiGard White EPDM membrane.

5. **Spray apply CAV-GRIP 3V** Bonding Adhesive evenly to both the membrane and substrate with a minimum 2" overlap to ensure 100% coverage. Avoid heavy areas or puddles that can skin over, trap solvent and create a blister. Refer to Product Data Sheets for the appropriate adhesive for the proper coverage rate.

CAUTION: Solvent flash-off can lower surface temperature below the dew point causing moisture to form on the adhesive. Slide your hand across the flashed-off adhesive on the insulation or cover board to ensure moisture has evaporated and the adhesive surface is dry and tacky prior to installing the membrane.

6. **Allow** adhesive to flash-off until it is tacky but will not string or transfer to a dry finger touch.

7. **Roll** the coated membrane into the coated substrate while avoiding wrinkles.

8. **Brush** down the bonded half of the membrane sheet, immediately after rolling the membrane sheet into the adhesive, **with a soft bristle push broom**.

9. **Roll the membrane with a 150 lb weighted segmented steel roller after brooming to achieve maximum contact.**

10. **Fold** back the unbonded half of the membrane sheet and repeat the bonding procedure.

E. **Membrane Securement/Ballasting- Ballasted Roofing Systems**

1. Ballasting- General

   a. Use of temporary ballast to prevent wind uplift is the responsibility of the Versico Authorized Roofing Contractor. For immediate protection against wind uplift, Versico requires ballast to be installed as each section of the installation is completed.

   b. When using polystyrene insulation directly beneath the membrane, ballast must be applied immediately after membrane installation to prevent potential damage to polystyrene insulation products from excessive heat.

   c. Care must be exercised during application of gravel or pavers. Heavily traveled areas during ballast

installation must be protected by placing temporary protection courses to prevent possible damage to the EPDM deck membrane and insulation.

2. Ballast Types/Coverage Rates

   a. The coverage rates listed in this section are considered minimum and are required by Versico for issuance of the standard Versico warranty. Depending on specific project conditions (building height, parapet height and project location), additional ballast may be necessary to provide wind uplift protection. Refer to "Attachment I" at the end of this section for suitable ballast types and coverage rates. **Comply with the specifier's requirements when an additional ballast coverage rate is specified.**

   b. **Rounded Water-Worn Gravel** must be applied over the EPDM membrane at the minimum rate of **1000 pounds per square** and must be evenly distributed to maintain an average of 10 pounds per square foot.

ASTM D 7765 SIZE NUMBER	MINIMUM COVERAGE RATE (pounds per square)	AVERAGE COVERAGE RATE (lbs./sq. ft. continuously distributed)
4 (1-1/2" nominal diameter)	1000	10
3 (2" nominal diameter)	1000	10
2 (2-1/2" nominal diameter)	1300	13
1 (3-1/2" nominal diameter)	1300	13

NOTE: In the field of the roof, some bare spots resulting from installation are permitted; however, they must not exceed 64 square inches and must be limited to no more than 2 per square (100 square feet). No bare spots are permitted in the perimeter area of the roof that is 10' wide.

   c. **Crushed Stone** must be applied in conjunction with Versico HP Protective Mat placed over the EPDM membrane. The crushed stone must be applied at the minimum rate of **1000 pounds per square** and must be evenly distributed to maintain an average of 10 pounds per square foot.

   d. **Smooth Surfaced Individual Concrete Pavers** or **Lightweight Interlocking Concrete Pavers**

      1) Lightweight interlocking pavers and individual concrete pavers with a surface other than steel troweled finish must be installed over Versico HP Protective Mat. Contact Versico for verification of acceptable pavers.

      2) **Individual Concrete Pavers,** when specified, must be installed loose laid and butted with no gaps greater than 1/2".

         NOTE: Do not install pavers heavier than 100 pounds per unit unless approved in writing by Versico.

      3) **Lightweight Interlocking Concrete Pavers**, when specified, must be installed in accordance with the respective manufacturer's specification and as approved by Versico prior to installation.

3. Ballast Criteria for up to 20 Year Extended Warranty

   a. Refer to installations below for calculating corner/perimeter areas for the noted warranty wind speeds available.

Ballast Requirements for 72 mph Warranty

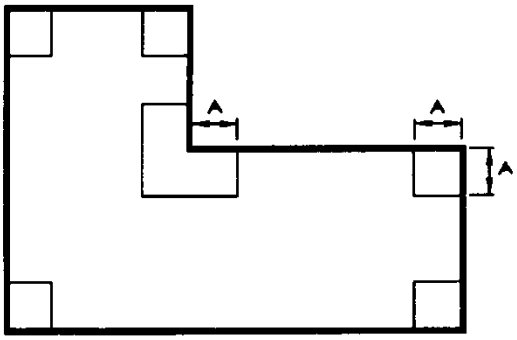

A (Corners) = .4 Times the Building Height
(10' minimum)

Ballast Requirements for 80 mph Warranty

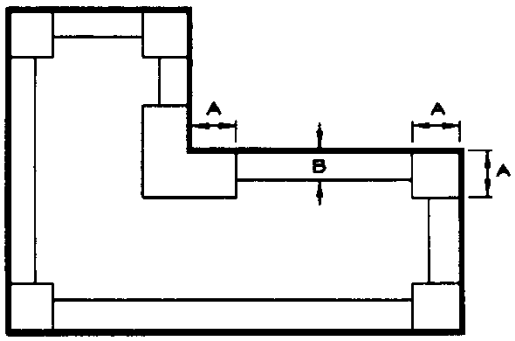

A (Corners) = .4 Times the Building Height
(10' minimum)
B (Perimeters) = 10'

b. At corner and/or perimeter areas, ballast shall be 2-1/2” nominal rounded water worn gravel conforming to gradation #1 or #2 in accordance with ASTM D7765 method of sizing. Coverage rate shall be a minimum of 13 pounds per square foot.

c. In field areas, ballast shall be 1-1/2” nominal rounded water worn gravel conforming to gradation #4 in accordance with ASTM D7765 method of sizing. Coverage rate shall be a minimum of 10 pounds per square foot.

4. Placement of Versico Protective Mat

a. When specified or required by Versico, position Versico HP Protective Mat loosely over the membrane with all edges overlapped a minimum of 6".

b. Extend the mat a minimum of 2" above the anticipated ballast level at the perimeter and around penetrations except for roof drains and scuppers.

c. The mat must extend to drain bases, scupper openings and the base of Dutch gutters **but must not restrict drainage.**

d. Additional matting must be installed around penetrations to prevent direct contact between crushed stone or pavers and flashing.

Note: Following the placement of the HP Protective Mat, it is necessary to install the ballast or temporary ballast to prevent the movement or displacement of unballasted fabric.

F. **Membrane Securement/Mechanically Attached Roofing System (Fastening)**

1. EPDM membrane shall be mechanically attached to the structural deck with specified Versico Fasteners and designated Plates or Bars, for fastening densities and numbers of perimeter sheets refer to Warranty Tables, Paragraph 1.05.

2. Membrane Fastening Selection Table

Membrane Fastener Selection

Deck Type	Versico Fasteners*	Versico Plate
Steel or Lightweight Insulating Concrete over Steel	HPV	HPV Polymer or Seam Fastening Plates
	HPV-XL	HPV-XL Polymer
Structural Concrete, rated 3,000 psi or greater	CD-10	HPV Polymer or Seam Fastening Plates
	MP 14-10	HPV Polymer or Seam Fastening Plates
Wood Plank, min. 15/32" thick Plywood or min. 7/16" OSB	HPV	HPV Polymer or Seam Fastening Plates
Cementitious Wood Fiber	Polymer Gyptec	Gyptec Plates – 2" Dia.
Gypsum	Polymer Gyptec	Gyptec Plates – 2" Dia.

Refer to Warranty Tables in Paragraph 1.05 for fastening densities and number of perimeter sheets.
*Determine proper fastener length for deck penetration, refer to Table 2.05B.

3. On steel decks, membrane shall be positioned with seams perpendicular to the steel deck flutes. This allows the external forces on the roof assembly to be distributed between multiple steel deck panels. Refer to **Design Reference DR-06-19 "Withdrawal Resistance Criteria"** in the Versico Technical Manual.

4. When mechanical securement is not provided in some of the Versico Universal Details (i.e., pipes and pourable sealer pockets), additional Seam Fastening Plates must be used for membrane securement. The plates must be positioned a maximum of 12" away from the penetration, spaced a maximum of 12" on center and flashed in accordance with the applicable Versico Detail.

5. **Perimeter Sheets**

   The number of perimeter sheets and fastener spacing is dependent on the building height, wind zone location and warranty duration as outlined in Warranty Tables in Paragraph 1.05.

   The roof perimeter is defined as all edges of each roof section (i.e., parapets, building expansion joints at adjoining walls, penthouse walls, etc.). When multi-level roofs meet at a common wall, the adjacent edge of the upper roof is treated as a roof perimeter if the difference in height is greater than 10'. Perimeter sheets are not required at the base of the wall at the lower level.

   NOTE: Expansion joints, control joints and fire walls in the field of the roof or roof ridges with slopes less than 3" to the horizontal foot are not considered as part of the roof perimeter.

   Perimeter sheets can be formed by using individual 5' or 6.5' wide sheets or by sub-dividing 8' or 10' wide field sheet using 9" Quick-Applied RTS strip or row of seam fastening plates as described below.

   a. **Individual Perimeter Sheets (5', 6.5')**

      Position membrane along the perimeter of the roof over the acceptable insulation/underlayment. The perimeter membrane width from line of securement to line of securement should be approximately 4.5' - 6'-0" wide depending on perimeter sheet size.

   b. **RTS (Reinforced Termination Strip) Method**

      1) When **field sheets are positioned parallel to a roof perimeter, 9" wide Quick-Applied RTS** shall be placed approximately down the center of the 8' or 10' wide field membrane sheets. When a RTS divides a field sheet in half, two perimeter sheets are created.

      2) When an 8' or 10' wide reinforced **EPDM membrane sheet extends perpendicular to the edge of the roof**, install **9" wide Quick-Applied RTS** beneath the EPDM membrane sheet approximately of 3'-6"' for the 8' field sheet to approximately of 4' -0" for the 10' field sheet from the edge of the roof. When multiple perimeter sheets are required, additional RTS may be positioned approximately 3'-6" to 4'-0" from the previous RTS to create additional perimeter sheets.

         CAUTION: 6" wide Quick-Applied RTS is only available with 3" wide QA Seam Tape on one side and therefore cannot be used to form perimeter sheets.

      3) Refer to Applicable Versico Details for installation

c. **Fastening Plates Method**

When field sheets extend to the edge of the roof, approved fastening plates can be installed through the reinforced membrane 3'-6" to 4'-6" from the roof edge which will be flashed with 6" wide Quick-Applied Cured Cover Strip. When field sheets are positioned parallel to the roof edge, fastening through the membrane along the centerline creates two perimeter sheets. When multiple perimeter sheets are required, additional fastening plates shall be positioned 3'-6" to 4'-6" from the previously installed fastening plates. Refer to applicable Versico Details for installation.

d. **Building with Special Conditions:**

Air pressurized buildings, canopies and buildings with large openings where the total wall openings exceed 10% of the total wall area on which the openings are located (such as airport hangers, warehouses and large maintenance facilities) will typically require additional perimeter membrane securement, an increased fastening density or other enhancement.

e. **Building with large openings**

When any wall contains major openings with a combined area which exceeds 10% of the total wall area on which the openings are located, either four 5' or 6.5' wide to two 10' wide reinforced EPDM membrane sheets (centered over the opening) must be specified as shown.

1) 9" wide Quick-Applied RTS (Reinforced Termination Strip) shall be specified in conjunction with the 8' or 10' wide membrane sheets.

2) The 9" wide Quick-Applied RTS is to be positioned beneath the 8' or 10' wide membrane sheet along the centerline and shall be secured with Polymer Seam Plates (required for steel decks) or Seam Fastening Plates. All fasteners and plates shall be spaced at the rate required at the roof perimeter as shown on the membrane securement charts on the previous pages.

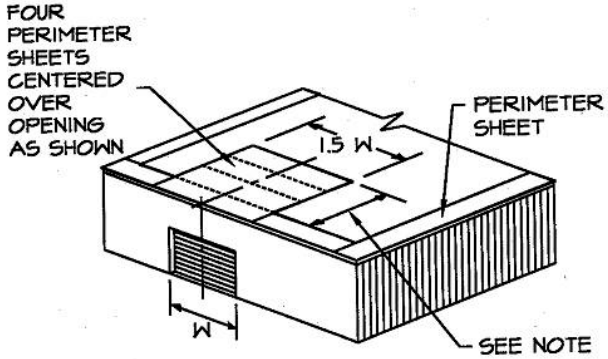

3) As an option to the above perimeter securement, a fully adhered membrane section may be used in lieu of the mechanically attached membrane at large openings in accordance with the Versico Specification for the VersiGard (black and white) Fully Adhered Roofing System.

NOTE: Depth of perimeter area, noted above, shall not be less than 2.5 times the width of the opening.

f. **Buildings with overhangs**

The membrane must be specified with securement 3-1/2' to 4-1/2' over the entire overhang area extending onto the main roof deck a minimum of 3 ½' when at the same level.

1) This can be achieved utilizing 8' or 10' wide membrane sheets in conjunction with 9" wide Quick-Applied RTS as described above.

2) As an option, a fully adhered membrane section may be used in lieu of the mechanically attached membrane at building overhangs in accordance with the Versico Specification for the VersiGard (black and white) Fully Adhered Roofing System.

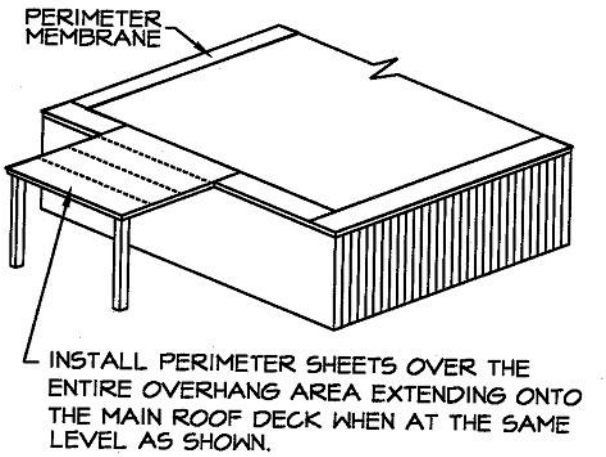

6. **Field Membranes**

a. **Position** field membrane sheets adjacent to perimeter membrane to allow a minimum 6" overlap, 3" from the center of the plate or bar in front and back.

NOTE: For 20-year warranty projects with a roof slope less than 1/4" in 12" (minimum 1/8" slope required) or when splices buck water, strip in seams with a 6" Quick-Applied Overlayment or Cured Cover Strip.

b. **Secure the field and perimeter membrane sheets** along the pre-printed blue line approximately 3" from the edge of the membrane sheet at the approved fastening density with the required Versico Fastener and Versico Seam Plates or Bars. Refer to "Membrane Fastener Selection" Table in Paragraph 3.05 for further information.

Correct fastener placement must conform to the following:

1) The **minimum** distance between the bottom membrane edge and the nearest edge of the fastening plate or bar must be **2"**.

2) The **minimum** distance between the overlapping membrane edge and the nearest edge of the fastening plate or bar must be **2"**.

c. On new construction projects, where direct application of the membrane is specified over Protection Mat over lightweight insulating concrete, standard 2" diameter Seam Fastening Plates must be used since the Polymer Seam Plates will not properly seat.

d. **Position** adjoining membrane sheets to allow a minimum overlap of 6" where Fastening Plates are located (along length of the membrane); at the same time overlap end roll sections (width of the membrane) a minimum of 3" for Projects with a maximum 15 Year Warranty. For 20 Year Warranties, end roll sections should be overlapped 6" with 6" QA Seam Tape.

e. Work shall progress across the roof with a minimum 6" overlap provided at the previously secured sheet edge. The opposite length of the sheet must be secured with approved Fastening Plates or bars and overlapped accordingly.

G. **Membrane Splicing**

1. **General**

a. **VersiGard/VersiGard White – Fully Adhered or Ballasted Roofing Systems**

1) **Projects with 10, 15, 20 and 25 year Warranties – Detail VGC-2.1A.**

Side Laps / End Laps: Tape splices must be a minimum of 2-1/2" wide using **3" wide field-applied Quick-Applied Seam Tape OR 3" Quick-Applied Seam Tape (QAT)**. (**Detail VGC-2.1A**).

Splice Intersections: 'T'-Joints are to be flashed with a bead of lap sealant and 6"x6" minimum Quick-Applied 'T'-Joint Cover, (for membranes of maximum thickness of 75 mil). (VGC-2.1A). **For membranes of thickness of 90 mil**, Apply a second layer of 12"x12" Quick-Applied 'T'-Joint Cover centered over 6"x6" 'T'-Joint Cover. (**Detail VGC-2.2A**).

Note: A minimum 6"x6" section of Quick-Applied Uncured Flashing may be used as a 'T'-Joint cover. Quick-Applied Uncured Flashing is available in rolls of 6", 9" and 12".

2) **Projects with 30 year warranties – Detail VGC-2.1A**

OPTION 1:

Side Laps / End Laps: Tape splices may be a minimum **3" wide Factory-Applied QA Seam Tape (VersiGard QAT) OR 3" wide QA Seam Tape**. In addition, the entire field splice must be overlaid with a continuous 6" wide Quick-Applied Overlayment Strip. (See **Detail VGC-2.1A -Option 1**).

Splice Intersections: Overlay the entire field splice with a continuous 6" wide Quick-Applied Overlayment Strip. Apply Lap Sealant at all Intersections between Quick-Applied Overlayment Strip. (See **Detail VGC-2.1A -Option 1**).

OPTION 2:

Side Laps / End Laps: Tape splices may be a minimum of 5-1/2" wide using **6" wide Factory-Applied QA Seam Tape (VersiGard QAT) OR 6" wide QA Seam Tape**. (**Detail VGC-2.1A – Option 2**).

Splice Intersections: 'T'-Joints are to be flashed with a bead of lap sealant and 6"x6" minimum Quick-Applied 'T'-Joint Cover. Apply a second layer of 12"x12" QA 'T'-Joint Cover centered over 6" x 6" QA 'T'-Joint Cover. (**Detail VGC-2.1A – Option**).

Note: A minimum 6"x6" section of Quick-Applied Uncured Flashing may be used as a 'T'-Joint cover. Quick-Applied Uncured Flashing is available in rolls of 6", 9" and 12".

b. **VersiGard OR VersiGard WHITE Reinforced Mechanically Attached Roofing System**

1) **Projects with 10, 15 and 20 year Warranties – Detail VGMA-2.1 and VGMA-2.2**

Side Laps: Regardless of Warranty duration, where fastening plates are placed, shall be spliced using **6" wide Factory-Applied QA Seam Tape (VersiGard QAT)** or **6" wide QA Seam Tape**. The splice tape shall be centered over the plates to extend approximately 2" on each side. QA Seam Tape must extend approximately 1/8" beyond the edge of the overlapping membrane. (**Detail VGMA-2.1**).

End Laps: Shall be spliced using **3" wide QA Seam Tape** resulting in a minimum splice width of 2-1/2" for a maximum of 20 year warranties. (Detail VGMA-2.2).

Splice Intersections: 'T'-Joints are to be flashed with a bead of lap sealant and 6"x6" QA 'T'-Joint Cover. (Detail VGMA-2.1).

2) **Projects with 25 and 30 year Warranties – Detail VGMA-2.2**

Side Laps: Where fastening plates are placed, shall be spliced using **6" wide Factory-Applied QA Seam Tape (QAT) OR 6" wide Field-Applied QA Seam Tape**. The splice tape shall be centered over the plates to extend approximately 2" on each side. QA Seam Tape must extend approximately 1/8" beyond the edge of the overlapping membrane. (**Detail VGMA-2.2**).

End Laps: Shall be spliced using **6" wide Factory-Applied QA Seam Tape (QAT) OR 6" wide Field-Applied QA Seam Tape** resulting in a minimum splice of 5-1/2" wide for a maximum of 30 year warranties. (**Detail VGMA-2.2**).

Splice Intersections: 'T'-Joints are to be flashed with a bead of lap sealant and 6"x6" QA 'T'-Joint Cover. Apply a second layer of 12"x12" QA 'T'-Joint Cover centered over 6" x 6" QA 'T'-Joint Cover. (**Detail VGMA-2.3**).

2. For splicing procedures, cautions and warnings refer to **Spec Supplement E-02-20 "Membrane Splicing and Splice Repairs"** for information.

H. **Additional Membrane Securement**

Securement must be provided at the perimeter of each roof level, roof section, expansion joint, curb flashing, skylight, interior wall, penthouse, etc., at any inside angle change where slope exceeds 2" in one horizontal foot, **and at other penetrations** in accordance with Versico's details and securement options as listed below.

Securement may be achieved as follows:

1. **Quick-Applied RTS (Reinforced Termination Strip)**

Quick-Applied RTS is a 6" wide strip of reinforced EPDM membrane with factory-applied 3" wide QA Seam Tape and is installed in conjunction with Versico EPDM Fasteners and 2" diameter Seam Fastening Plates spaced a maximum of 12" on center below the EPDM deck membrane (Polymer Seam Plates or Polymer Batten Strips are required for Mechanically Attached Roofing Systems over steel decks). The securement strip can be fastened horizontally to the structural deck or vertically at walls and curbs.

a. Loose lay the 6" wide Quick-Applied RTS along parapet walls 6" to 9" from corners and fasten with Seam Fastening Plates and the appropriate Versico fastener to the roof deck or into the parapet wall. Spacing of the Seam Fastening Plates shall be a maximum of 12" on center for up to 20 year warranties (less than 90 mph warranty wind speed) and a maximum of 6" on center for 25 and 30 year warranties.

1) For horizontal attachment, the reinforced strip must be positioned a minimum of 1/8" to a maximum of 6" away from the angle change with pressure sensitive side facing away from the parapet and towards the roof plane.

2) For vertical attachment, the reinforced strip must be attached to the vertical wall with pressure sensitive side extending onto the roof surface.

CAUTION: Horizontal RTS attachment is required when insulation is attached with adhesives to a vapor barrier or an existing asphalt based roof. For various options, Refer to **Spec Supplement G-07-20 "Application Procedures for Versico's VapAir Seal 725TR Air and Vapor Barrier".**

b. Adjoining sections of the reinforced strip need not be overlapped; however, gaps between adjoining sections must not exceed 1".

CAUTION: When RTS is used for membrane securement along metal edgings, refer to the appropriate detail for applicable installation criteria. For some metal edge details, adjoining sections of the reinforced strip must be overlapped and spliced.

c. **When using Quick-Applied RTS, prime the underside of the field membrane with Versico Primer** and allow proper flash-off prior to mating with the QA tape portion of the RTS.

CAUTION: On fully adhered systems discontinue bonding adhesive application on the underside of the membrane in area of the sheet where contact with the Quick -Applied RTS is to occur. Contact between Quick-Applied RTS and membrane coated with bonding adhesive can result in poor long term peel and shear values.

2. **Seam Fastening Plates**
When the use of Quick-Applied RTS is not feasible (at smaller curbs or skylights), 2" diameter Seam Fastening Plates may be used.

a. Seam Fastening Plates may be installed horizontally into the structural deck or into walls or curbs.

b. Securement of the EPDM membrane with the approved Versico Fasteners and Seam Fastening Plates must be a maximum of 12" on center starting 6" minimum to 9" maximum from inside and outside corners.

c. If horizontal wood nailers are provided, secure the Seam Fastening Plates to the wood nailer with Versico HPV Fasteners. Nails (i.e. ringshank, roofing, etc.) are not acceptable for securement.

d. After securing the Seam Fastening Plates, flash in accordance with the appropriate Versico Detail.

3.06 Flashings

For other requirements which must be complied with in order for Versico warranty to be issued, refer to Spec Supplement G-04-22 "Flashing Considerations / Metal Work".

A. **General Considerations**

1. All vertical field splices at the base of a wall or curb must be overlaid with Quick-Applied "T" Joint Covers, a 6" x 6" section (with rounded corners) of VersiGard (black and white) Quick-Applied Uncured EPDM Flashing centered over the field splice.

2. **Quick-Applied Uncured EPDM Flashing** must be limited to the overlayment of vertical seams (as required at angle changes), or to flash inside/outside corners, vent pipes, scuppers and other unusually shaped penetrations where the use of Pre-molded Pipe Seals, cured EPDM membrane or Quick-Applied Cured Cover Strip or Overlayment Strip is not practical.

   NOTE: When using Quick-Applied products in colder temperatures, use a heat gun to warm the product. Apply heat to the EPDM flashing side of the product. Do not apply heat directly to the pre-applied adhesive. The Quick-Applied Flashing must be applied immediately after primer flashes off. Refer to "Membrane Splicing with QA Seam Tape" for application procedures in colder temperatures.

3. When using **Quick-Applied Cured Cover Strip or Overlayment Strip** to overlay Seam Fastening Plates or metal edging, etc., **V-150 Primer or LOW-VOC Primer** must be used to clean the membrane and metal flanges.

4. Special requirements may apply for certain flashing details for projects with extended warranty durations. Refer to Versico published details for applicable requirements when warranty coverage exceeds beyond 20 years.

5. When using Solvent-Free EPDM Bonding Adhesive refer to the Technical Data Bulletin for additional installation information.

B. **Walls, Parapets, Curbs, Skylights, etc.**

1. Use continuous deck membrane with Quick-Applied RTS or Seam Fastening Plates along the angle change.

   a. When using Quick-Applied RTS, refer to Paragraph 3.05 G, Additional Membrane Securement, for attachment criteria.

   b. When Seam Fastening Plates are used to secure continuous deck membrane, use minimum 6" wide Quick-Applied Cured Cover Strip or Overlayment Strip to overlay fasteners and plates.

2. When the use of continuous deck membrane for wall flashing is not feasible, a separate piece of cured EPDM membrane may be used.

   NOTE: 60-mil cured non reinforced membrane may be used as a separate wall flashing with projects of warranty 20 years or greater. The flashing may also incorporate membrane equal of thickness to that of the EPDM membrane at the deck level

3. Adhere flashing to the wall and terminate in accordance with the applicable Versico Detail.

4. Use a "T" Joint Cover or 6" x 6" Quick-Applied Uncured Flashing with rounded corners to overlay vertical splices as shown on the applicable Versico Detail.

5. Refer to applicable Versico Details for various corner flashing options.

C. **Flashing of other Penetrations**, refer to **Spec Supplement G-04-22 for Flashing** Considerations and the applicable Versico detail for specific requirements.

D. **Flashing of Difficult Penetrations,** refer to **Spec Supplement G-11-20 for "LIQUISEAL Liquid Flashing**" for additional information and specific requirements.

3.07 Roof Walkways

Walkways are to be specified at all traffic concentration points (i.e., roof hatches, access doors, rooftop ladders, etc.), and if regular maintenance (once a month or more) is necessary to service rooftop equipment. Refer to **Spec Supplement G-05-21 "Roof Walkway Installations."**

3.08 Daily Seal

On phased roofing, when the completion of flashings and terminations is not possible by the end of each workday, provisions must be taken to temporarily close the membrane to prevent water infiltration. Refer to Spec Supplement G-06-20 "Daily Seal & Clean Up".

3.09 Optional Color Coating

1. **If optional color coating is specified, Versico's final inspection for warranty must be conducted prior to the coating application.** This will permit the completion of any "Repair for Warranty" items without consideration for the removal and reapplication of the coating. The owner will then verify that the coating was applied after receiving the warranty.

2. If **X-Tenda Coat** is specified to color the membrane surface, refer to the Versico X-Tenda Coat Specification for installation requirements.

3.10 Clean Up

For daily tie-off or cleaning procedures refer to **Spec Supplement, G-06-20 "Daily Seal / Clean Up"** in the Versico Technical Manual.

A. **General**

1. Termination bars and surface mounted reglets must be specified to be installed directly to the wall surface.

2. Versico recommends VersiTrim Metal Edging/Coping, Termination Bar or Drip Edge for membrane termination.

   NOTE: Refer to Warranty Tables in Section 1.05 for specific metal edge requirements for projects with Total System Warranties or those with extended peak gust wind speed coverage greater than 80 miles per hour.

3. Metal work by others, when specified, must be fastened to prevent the metal from pulling free or buckling and sealed to prevent moisture from entering the roofing system or building. **Unless supplied by Versico, metal work securement is not included in this specification and is excluded from the Versico warranty.**

4. **On retrofit projects**, existing counter flashing, edging, expansion joint covers, copings, etc., shall not be reused unless investigated by the specifier to determine its compliance to Versico's current details.

Copyright 2024 Versico Roofing Systems
Versico, VersiGard, VersiCore, VersiTrim, DuraFaceR, LIQUISEAL and Flexible DASH Adhesive are Trademarks of Versico
Insulfoam, InsulLam, R-Tech by Insulfoam
Thermapink, Foamular and Durapink are Trademarks of Owens Corning
DensDeck, DensDeck Prime and DensDeck StormX Prime are Trademarks of Georgia-Pacific Corporation
Securock is a Trademark of USG
Styrofoam is a Trademark of Dow Chemical Company
OlyBond is a Trademark of OMG, Inc.

This specification represents the applicable information available at the time of its publication. Owners, specifiers and Versico authorized roofing contractors should consult Versico or their Versico Independent Sales Representative for any information that has subsequently been made available.

Review the appropriate Versico warranty for specific warranty coverage, terms, conditions and limitations.

SPECIFICATION
ATTACHMENT

VersiGard Design "B" Loose-Laid Ballasted Roofing Systems

"Attachment I"

Ballast Criteria

January 2024

A. GENERAL

The specifier must evaluate the various conditions by which the ballast requirements are dictated. Building height, parapet height and project wind zone are major factors when specifying a minimum ballast requirement. The guidelines for ballast requirements which have been published by the following organizations should be referenced:

1. American National Standards Institute, ANSI/SPRI RP-4 (current edition) Wind Design Guide for Ballasted Single-Ply Roofing Systems. This standard is referenced in the current edition of the International Building Code (IBC).

2. Factory Mutual (FM) Research Corporation Loss Prevention Data Sheets 1-28 and 1-29.

B. BALLAST TYPES/COVERAGE RATES

The coverage rates listed below are considered minimum and are required by Versico for the issuance of the Versico warranty. Additional ballast coverage rates may be specified to provide additional wind uplift resistance.

1. **Rounded Water-Worn Gravel** may be placed directly on the EPDM membrane without additional membrane protection.

    a. Minimum acceptable gradation:

        1. Nominal 1-1/2" rounded water worn gravel which conforms to the following gradation: 50% retained by a 3/4" screen, 95% retained by a 1/2" screen and 98% retained by a 1/4" screen. Use ASTM C136 method for sizing gravel.

        2. Alternately, #4, #3 and #24 stone (sized in accordance with ASTM D7765 method of sizing) may be used in lieu of the stone listed above.

        3. Coverage rate shall be no less than 1000 pounds per 100 square feet and ballast must be evenly distributed to maintain an average of 10 pounds per square foot.

    b. Nominal 2-1/2" rounded water worn gravel which conforms to gradation #1 or #2 when sized in accordance with ASTM D7765 method of sizing. Coverage rate shall be no less than 1300 pounds per 100 square feet and gravel must be evenly distributed to maintain an average of 13 pounds per square foot.

2. **Standard sizes of coarse aggregate** - Based on ASTM D7765

Size Number	1	2	3	4
Nominal Size Square Openings	3-1/2" to 1-1/2"	2-1/2" to 1-1/2"	2" to 1"	1-1/2" to 3/4"
Amounts Passing Each Lab Sieve (Square Opening), Percent (%)				
4"	100			
3-1/2"	90 to 100			
3"		100		
2-1/2"	25 to 60	90 to 100	100	
2"		35 to 70	90 to 100	100
1-1/2"	0 to 15	0 to 15	0 to 15	90 to 100
1"				20 to 55
3/4"	0 to 5	0 to 5		0 to 15
1/2"			0 to 5	
3/8"				0 to 5

3. **Crushed Stone**, when specified, shall conform to the gradations approved for rounded water-worn gravel and must be installed in conjunction with Versico Protective Mat.

   a. Protective Mat must extend a minimum of 2" above the crushed stone at the perimeter and penetrations, but must be discontinued at scuppers, Dutch gutters and at drain bases.

   b. A minimum 6" overlap between adjacent sheets of HP Protective Mat must be specified.

4. **Individual Concrete Pavers**

   a. Individual pavers with a minimum weight of 18 pounds per square foot may be substituted for nominal 1-1/2" stone. Individual pavers with a minimum weight of 22 pounds per square foot may be substituted for nominal 2-1/2" stone.

   b. Individual pavers must be a maximum of two feet square. Unless otherwise required by Versico, pavers must weigh no more than 100 pounds per unit to allow for easy removal and replacement.

   c. Individual pavers with a surface other than a steel troweled finish as approved by Versico must be installed over Protective Mat and must be accepted by Versico prior to installation.

      Elevating pavers should increase life expectancy, reduce freeze/thaw effects and promote more positive drainage. Acceptable pedestals can be specified under corners of pavers to elevate paver.

   d. Individual concrete pavers shall be loose laid and butted together with no gaps greater than 1/2".

5. **Lightweight Interlocking Concrete Pavers**

   a. Depending on the type of lightweight interlocking system, Versico Protective Mat or manufacturer's recommended matting may be required by Versico as a protection layer for the membrane. **Versico must be consulted prior to installation concerning protective matting requirements.**

   b. Lightweight interlocking pavers (minimum 10 pounds per square foot) may be substituted for nominal 1-1/2" stone or nominal 2-1/2" stone.

   c. When lightweight interlocking pavers are specified, the respective paver manufacturer must be consulted concerning installation criteria.

   CAUTION: The securement method suggested by the respective interlocking paver manufacturer must be reviewed by Versico to determine membrane accessibility. If access to the membrane system is impaired by the paver interlocking mechanism (mechanical clips, strapping, adhesive, etc.), the building owner must assume the responsibility of providing access to the membrane for the purpose of investigation and warranty related repairs.

d. Lightweight Ballast Paver – 2’ x 2’ x 1.25” weighing 15 lbs/sq. ft.

6. **Walkways**

CAUTION: Molded Walkway pads not recommended within 10 feet of the perimeter of the roof on ballasted systems to avoid discontinuation of the primary membrane securement (ballast). In lieu of molded walkway pads, concrete pavers can be used when walkway is to be extended into the perimeter area.

a. **Versico Interlocking Rubber Pavers:** A 2' x 2' x 2" thick rubber paver weighing approximately 24 pounds per unit, 6 pounds per square foot manufactured from recycled rubber, which provides a resilient, shock absorbing, weather resistant surface. Interlocking Rubber Pavers are designed primarily for use as a walkway or on terrace areas offering an environmentally sound design. Paver features bi-directional drainage and freeze/thaw stability. The Versico Interlocking Rubber Paver can be installed directly over the EPDM membrane without a separation layer.

b. **Hanover Pedestal Paver –** Used for light traffic areas associated with rooftop or garden roof applications. 2’x2’x2.25” thick precast concrete pavers weighing 22 psf with an elevated clearance of 1/2” from incorporated footing. The pedestal paver can either be installed in conjunction with a separation layer of HP Protective Mat or using Pedestal and shims.

Note: EPDM Pedestal and Leveling Shims – A 3/8” fixed height EPDM rubber pedestal incorporating 1/8” spacer tabs. The pedestal allows pavers to follow the contour of the roof and may be combined with 1/8” or 1/16” leveling shims to prevent paver movement and provide a more stable feel. Both Hanover Pavers and leveling shims are available from Versico. (Refer to product section **Spec Supplement P-01-22 “Related Products”**.)

c. **Hanover Ballast and Lightweight Ballast Paver -** The standard, 24” x 24” x 1-13/16” thick, Ballast Paver comes in a natural color and a non-slip Diamond finish and weighs 22 lbs/sq. ft. The Lightweight, 23-1/2” x 23-1/2” x 1-1/4” thick, Ballast Paver comes in a natural color and a non-slip diamond finish and weighs 15 lbs/sq. ft. Both pavers can be used as ballast or walkways.

d. **Other Walkway Considerations:**

Smooth concrete pavers when specified in conjunction with insulation that is Mechanically Attached, must be loose laid over a slip sheet of membrane or 2 layers of Versico Protective Mat. When insulation is attached with Flexible DASH Adhesive, concrete pavers may be placed over one layer of Protective Mat. Pavers cannot weigh more than 80 pounds per paper for ease of removal

1) Walkways are considered a maintenance item and are excluded from the Versico warranty.

2) Window washing equipment will require special maintenance. Runways or window washing tracks must be utilized to prevent damage to membrane or insulation. Such details must be reviewed by Versico to determine reasonable access to the membrane and associated insulation/underlayment components.

END OF SECTION

This page intentionally blank

SPECIFICATION
ATTACHMENT

VersiGard® Design EPDM Roofing Systems
Adhered, Ballasted and Mechanically Fastened

"Attachment II"

25/30 Year Warranty
Design Enhancements

January 2024

Information contained in this Attachment outlines necessary enhancements required for projects where a 25 or 30-year Warranty is specified. At the applicator's or specifier's discretion, projects may be forwarded to Versico for warranty review prior to installation or bid.

Section **Page**

A. General 50

B. Membrane Criteria 50

Non-Reinforced Membrane Criteria and Hail Coverage Table 51

Reinforced Membrane Criteria and Hail Coverage Table 51

C. Adhered System Design Criteria 52

D. Mechanically Fastened System Design Criteria 53

E. Ballasted System Design Criteria 55

F. Roof Deck Criteria 56

G. Flashing/Terminations 57

A. General

1. All products specified for these roofing assemblies must be products manufactured or marketed by Versico.

2. On retrofit projects, all existing roofing material shall be totally removed.

3. All projects, a final shop drawing shall be approved by Versico prior to installation. Shop drawings must include all pertaining details. As-Built projects are not recommended.

4. The roof assembly will vary based on warranty wind speed and hail coverage. As identified in Warranty Tables, included in this attachment.

5. An air/vapor barrier shall be used when required and must be sealed around perimeter and roof penetrations. When not specified, the roof membrane shall be adhered over perimeter wood nailer along edges to prevent air infiltration along edging, regardless of assembly type (Ballasted, Adhered and Mechanically Fastened).

6. Due to warranty length, covered in this attachment, special consideration should be given to the total R-Value of the roof assembly. Utilizing the International Energy Conservation Code (IECC) to determine the minimum level of insulation for the building project's location is recommended.

7. To optimize energy efficiency, insulation shall be installed in multiple layers with joints staggered.

8. For limitations and specific types of insulation/underlayments refer to "Section E Insulation/Underlayments"

9. 1/4" per horizontal foot slope is preferred; however 1/8" slope with sufficient number of drains and crickets / saddles may be accepted. Assemblies described in this attachment are governed by the maximum slope limit described in the current Versico publication.

10. Refer to **Specification Supplement E-02-20 "EPDM Membrane Splicing and Splice Repairs"** and applicable Versico Details for additional design enhancements.

B. Membrane Criteria

1. **Adhered Roofing Systems**, the roofing membrane shall be a minimum of **60-mil thick VersiGard (black or white) Non-Reinforced EPDM Membrane** utilizing enhanced details for **25 Year Warranty** Duration

   OR

   90-mil VersiGard Non-Reinforced Membrane OR 75-mil thick VersiGard Reinforced Membrane utilizing enhanced details for **30 Year Warranty** Duration.

2. **Ballasted Roofing Systems**, the roofing membrane shall be a minimum of **60-mil thick VersiGard Non-Reinforced Membrane** utilizing enhanced details for **30 Year Warranty** Duration

   OR

   90-mil thick VersiGard Non-Reinforced Membrane utilizing enhanced details for **30 Year Warranty** Duration. Maximum membrane width, not to exceed 10' wide.

3. **Mechanically Fastened Roofing Systems**, the roofing membrane shall be a minimum of **75-mil thick VersiGard Reinforced Membrane** utilizing enhanced details for 25 or 30 Year Warranty Duration.

4. **Non-Reinforced Membrane Criteria and Hail Coverage**

Years	VersiGard (Black or White) Non-Reinforced Membranes					
	Warranty Wind Speed Coverage				Minimum Membrane Thickness	Hail Coverage
	55, 72 or 80 mph		90 to 100 mph	110 to 120 mph		
	Adhered (2)	Ballasted (1)	Adhered (2)	Adhered (2)		
25 or 30 year	√	√	√	N/A	VersiGard (Black or White) 60-mil	**Adhered Systems (VersiGard – Black or White)** 1" Dia. Hail Coverage requires a min. 60-mil Adhered to Cover Board. 2" Dia. Hail Coverage requires a min. 90-mil Adhered to Cover Board. **Additional Design Requirement** Cover Board set in Flexible DASH Adhesive (SecurShield HD, SecurShield HD Plus, DensDeck Prime, DensDeck StormX Prime or Securock - Adhered Only). **Ballasted Systems (VersiGard)** 1" or 2" Dia. Hail Coverage requires a min. 60-mil. 3" Dia. Hail Coverage requires a min. 90-mil.
30 year	√	√	√	N/A	VersiGard (Black or White) 90-mil	

Notes: N/A = Not Acceptable √= Acceptable

(1) VersiGard (White) membrane is not recommended for ballasted systems.
(2) Standard G200-SA or EPDM x-23 Low-VOC Bonding Adhesive must be utilized.

5. **Reinforced Membrane Criteria and Hail Coverage**

Years	VersiGard Reinforced Membranes							
	Warranty Wind Speed Coverage						Minimum Membrane Thickness	Hail Coverage **(Adhered Systems Only)**
	55, 72 or 80 mph		90 mph		100 to 120 mph			
	Adhered (1)	Mech. Fastened	Adhered (1)	Mech. Fastened	Adhered (1)	Mech. Fastened		
25 year	√	√	√	√	√	N/A	VersiGard 75-mil	1" Dia. Hail Coverage requires a Min. 60-mil Adhered to Cover Board. 2" Dia. Hail Coverage requires a Min. 75-mil Adhered to Cover Board. **Additional Design Requirement:** Cover Board set in Flexible DASH Adhesive (SecurShield HD, SecurShield HD Plus, DensDeck Prime, DensDeck StormX Prime or Securock - Adhered Only).
30 year	√	√	√	√	√	N/A	VersiGard 75-mil	

Notes: N/A = Not Acceptable √= Acceptable

(1) Standard G200-SA or EPDM x-23 Low-VOC Bonding Adhesive must be utilized.

C. Adhered System Design Criteria (25 YR to 30 YR Warranty)

1. Building height shall not exceed 100'. For projects where building height exceeds 100' or warranty wind speed exceeds 100 mph, please submit to Versico for review.
2. Local Wind Zone per ASCE 7-2010 (Category II Map) shall not exceed 120 mph.
3. All Field Splice "T-Joints" must be overlaid as described in **Detail VGC-2.1**.
4. The criteria is for compliance with Versico's requirements for warranty, when FM Compliance is required for a specific project refer to FM Documentation and Versico Code Listings.
5. 6" on center fastening required for Pressure Sensitive RTS.
6. Table below outlines insulation/underlayment requirements and application attachment methods:

Maximum Peak Gust Wind Speed Warranty	Minimum Membrane Underlayment		Insulation/Underlayment Attachment			Metal Edging
			# of Fasteners per 4' x 8' board size	Adhesive Ribbon Spacing for 4' x 4' size board		
				Field	Perimeter	
55 or 72 MPH	1-1/2" to 2" (25 psi) Polyisocyanurate (1)		16	6" (4)	6"	Versico Drip Edge or VersiTrim 200, 300, or 400 may be fastened with ring shank nails staggered 4" on center. Versico HPV or HPVX Fasteners may also be used fastened 12" on center.
	Cover Board over Insulation	1/2" Versico Recovery Board (2)(6)				
		1/2" SecurShield HD (3)				
		1/2" SecurShield HD Plus (3)				
		1/4" Dens-Deck Prime (3)				
		1/4" Securock (3)				
80 MPH	1-1/2" to 2" (25-psi) SecurShield Polyiso		20	6"	6"	Versico Drip Edge (5), VersiTrim 2000, 3000 or 4000.
	Cover Board over Insulation	1/2" SecurShield HD (3)	16			
		1/2" SecurShield HD Plus (3)				
		1/2" Dens-Deck Prime (3)				
		1/2" Securock (3)	20			
90 MPH	Cover Board over Insulation	1/2" SecurShield HD (3)	24	FS	FS	VersiTrim 2000 or 3000
		1/2" SecurShield HD Plus (3)	20			
		1/2" Dens-Deck Prime (3)				
		1/2" Securock (3)				
100 MPH	Cover Board over Insulation	5/8" Dens-Deck Prime or 5/8" DensDeck StormX Prime (3)	16	FS	FS	VersiTrim 2000 or 3000
		5/8" Securock (3)				
		1-1/2" DuraFaceR (OSB/Polyiso Composite) (3)				
		1/2" DuraStorm VSH (3)				
		2" SecurShield HD Composite (3)				
		1/2" SecurShield HD Plus (3)	24			

Notes:
FS = Full Spray or Ribbons @ 4" O.C.
All Versico Products listed for higher wind speed coverage can also be used for Warranties for lower speed coverage.
(i.e. 72 MPH underlayment may be used for 55 MPH underlayment)

(1) Not for use directly on concrete decks when adhesion is specified to the structural deck.
(2) For Building heights between 51'-100', enhance 12'-wide perimeter with 50% more fasteners and plates.
(3) Hail coverage offered with substrate when Flexible DASH Adhesive is used for cover board attachment.
(4) Structural Concrete - Field @ 12" O.C. / Perimeter @ 6" O.C.
(5) Versico HPV or HPVX Fasteners must be used to secure Versico Drip Edge to perimeter wood nailers.
(6) 1/2" Recovery Board limited to 55 mph.

D. Mechanically Fastened System Design Criteria (25 YR to 30 YR Warranty)

1. Building height limitation depends on structural deck type. Projects with structural concrete or steel decks are limited to 100' in height. Projects with plywood decks (3/4" min.) are limited to a maximum height of 30'. Projects with Wood plank (1" min.) are limited to a maximum height of 60'. For projects where building height exceeds 100' or warranty wind speed exceeds 100 mph, please submit to Versico for review.
2. Local Wind Zone per ASCE 7-2010 (Category II Map) shall not exceed 120 mph.
3. All Field Splice "T-Joints" must be overlaid as described in **Detail VGMA-2.1A**.
4. This criteria is for compliance with Versico's requirements for extended warranties, when FM Compliance is required for a specific project refer to FM Documentation and Versico Code Listings.
5. Fasteners covered in this attachment are limited to a length not to exceed 12". Assemblies with Tapered Insulation, requiring longer fasteners than 12", shall be reviewed by Versico.
6. 6" on center fastening required for Quick-Applied RTS.
7. Table below outlines insulation/underlayment requirements and application attachment methods:

Maximum Peak Gust Wind Speed Warranty	Deck Type	Insulation Thickness	Minimum Membrane Underlayment	Insulation Underlayment Attachment	Metal Edging
				# of Fasteners per 4' x 8' board size	
Up to 72 MPH	Steel, Concrete or Wood Deck	< 5"	1-1/2" to 2-1/2" (25 psi) VersiCore MP-H or SecurShield Polyisocyanurate	8	Versico Drip Edge, VersiTrim 200, 300, or 400 may be fastened with ring shank nails staggered 4" on center. Versico HPV or HPVX Fasteners may also be used fastened 12" on center.
		> 5"	Overlay 1/2" SecurShield HD Cover Board over VersiCore MP-H or SecurShield Polyisocyanurate		
80 MPH	Steel or Concrete Deck	Any Thickness	Overlay 1/2" SecurShield HD Cover Board over VersiCore MP-H or SecurShield Polyisocyanurate	8	Versico Drip Edge (1) or VersiTrim 2000, 3000 or 4000.
90 MPH	Steel or Concrete Deck	Any Thickness	Overlay 1/2" SecurShield HD Cover Board over VersiCore MP-H or SecurShield Polyisocyanurate	8	VersiTrim 2000 or 3000

Notes:

(1) Versico HPV or HPVX Fasteners must be used to secure Versico Drip Edge to perimeter wood nailers.

(2) An air/vapor barrier shall be used when required and must be sealed around perimeter and roof penetrations. When not specified, the roof membrane shall be adhered over perimeter wood nailer along edges to prevent air infiltration along edging, regardless of assembly type.

(VersiGard Reinforced Membrane Only)
22 GA. Steel Deck or Structural Concrete

Peak Gust Wind Speed Warranty	Max. Building Height	Min. Number of Perimeter Sheets			Field Membrane Width	Perimeter Sheet Width	Fastening Density (Field Sheets)	Fastening Density (Perimeter Sheets)
		Building Distance to Coastline						
		Greater than 7 miles	3 to 7 miles	Less than 3 miles				
55 MPH	Up to 60'	2	3	4	10'	Note 3	12" O.C.(1)	12" O.C.(1)
	61' to 100'	3	3	4	10'	Note 3	12" O.C.(1)	12" O.C.(1)
72 MPH	Up to 60'	3	3	4	10'	Note 3	6" O.C.(1)	6" O.C.(1)
	61' to 100'	4	5	5	10'	Note 3	6" O.C.(1)	6" O.C.(1)
80 MPH	Up to 60'	4	4	5	10'	Note 3	12" O.C.(2)	12" O.C.(2)
	61' to 100'	4	5	5	10'	Note 3	12" O.C.(2)	12" O.C.(2)
90 MPH	Up to 60'	4	5	5	10'	Note 3	12" O.C.(2)	12" O.C.(2)
	61' to 100'	5	5	5	10'	Note 3	12" O.C.(2)	6" O.C.(2)

(1) Using HPV Fasteners on Steel Deck with 2" Polymer Seam Plates
(2) Using HPV-XL Fasteners and 2-3/8" Polymer (HPV-XL) Plates
(3) Split Field sheet using a 9" Quick-Applied RTS along the center of the sheet.

(VersiGard Reinforced Membrane Only)
Wood Decks

Peak Gust Wind Speed Warranty	Deck Type	Projected Pull-Out Values	Min. Number of Perimeter Sheets		Field Membrane Width	Perimeter Sheet Width	Fastening Density (Field & Perimeter Sheets)
			Building Distance from Coastline				
			Greater than 7 miles	Less than or equal to 7 miles			
55 MPH	3/4" Plywood (2)	450 lbs	2	2	10'	Note 1	12" O.C.
72 MPH	Wood Plank (2)	540 lbs	2	2	10'	Note 1	12" O.C.
	3/4" Plywood (2)	450 lbs	2	4	10'	Note 1	12" O.C.
80 MPH	Wood Plank (2)	540 lbs	2	4	10'	Note 1	6" O.C.

(1) Split Field sheet using a 9" Quick-Applied RTS along the center of the sheet.
(2) Maximum Building Height Up to 60'

E. Ballasted Design Criteria (25 YR to 30 YR Warranty)

1. Building height shall not exceed 60'. For projects where building height exceeds 60' or warranty wind speed exceeds 80 mph, please submit to Versico for review.
2. Local Wind Zone per ASCE 7-2010 (Category II Map) shall not exceed 115 mph. Projects in greater wind zones may be submitted for review by Versico.
3. All Field Splice "T-Joints" must be overlaid as described in **Detail VGC-2.2**.
4. For applicable membrane thickness, refer to Tables in Section B4.
5. 6" on center fastening required for Quick-Applied RTS.

General

1. Versico Polyisocyanurate or Insulfoam EPS Insulation shall be applied in multiple layers with joints staggered between layers, following current energy codes. The layer directly under the membrane shall be 1-1/2" thick insulation and shall be loose-laid or, if specified, may be secured with bead adhesive (12" O.C. bead spacing is acceptable).

   CAUTION: The use of Mechanically Fasteners is not permitted for insulation securement.

Polyisocyanurate Insulation

1. When Polyisocyanurate insulation is specified, VersiCore or SecurShield (20 or 25 psi) shall be utilized and is recommended. On structural and lightweight structural concrete, to safeguard against residual moisture, the use of SecurShield Polyisocyanurate is required.

Expanded Polystyrene (EPS) Insulation

1. When EPS (Expanded Polystyrene) insulation is to be utilized, only Insulfoam EPS may be used as follows:

   a. Insulfoam I (1.0 pcf density) EPS.
   b. Insulfoam VIII (1.25 pcf density) EPS.

2. On steel decks, install EPS insulation in conjunction with thermal barrier, if required for code compliance.

3. When directly installed on steel deck, total thickness of insulation must be adequate to span deck flutes.

Ballast Types/Coverage Rates

b. The coverage rates listed in this attachment are considered minimum and are required by Versico for issuance of the standard Versico warranty. Depending on specific project conditions (building height, parapet height and project location), additional ballast may be necessary to provide wind uplift protection. Refer to "Attachment I" in this Specification for suitable ballast types and coverage rates. **Comply with the specifier's requirements when an additional ballast coverage rate is specified.**

c. **Rounded Water-Worn Gravel** must be applied over the EPDM membrane at the minimum rate of **1000 pounds per square** and must be evenly distributed to maintain an average of 10 pounds per square foot.

ASTM D 7765 SIZE NUMBER	MINIMUM COVERAGE RATE (pounds per square)	AVERAGE COVERAGE RATE (lbs./sq. ft. continuously distributed)
4 (1-1/2" nominal diameter)	1000	10
3 (2" nominal diameter)	1000	10
2 (2-1/2" nominal diameter)	1300	13
1 (3-1/2" nominal diameter)	1300	13

Notes: In the field of the roof, some bare spots resulting from installation are permitted; however, they must not exceed 64 square inches and must be limited to no more than 2 per square (100 square feet). No bare spots are permitted in the perimeter area of the roof that is 10' wide.

d. **Smooth Surfaced Individual Concrete Pavers**

1) When the use of concrete paver is specified, Versico supplied Hanover Pedestal Paver is recommended and can be covered by the Versico Warranty. A pedestal system is recommended, due to increased life expectancy, however, field fabricated, cut sections (8” x 8”) of VersiGard Black Quick-Applied / VersiGard White Peel & Stick Molded Walkway Pads, beneath pavers, at corners of pavers.

2) Individual pavers must be a maximum of two feet square. Unless otherwise required by Versico, pavers must weigh no more than 80 pounds per unit to allow for easy removal and replacement.

3) Individual pavers with a surface other than a steel troweled finish as approved by Versico, must be installed over Versico HP Protective Mat and must be accepted by Versico prior to installation.

4) Elevating pavers should increase life expectancy, reduce freeze/thaw effects, and promote more positive drainage. Acceptable pedestals can be specified under corners of pavers to elevate paver.

5) Individual concrete pavers shall be loose laid and butted together with no gaps greater than 1/2".

Ballast Criteria for Up to 30 Year Extended Warranty

a. Refer to installations below for calculating corner/perimeter areas for the noted warranty wind speeds available.

Ballast Requirements for 72 mph Warranty

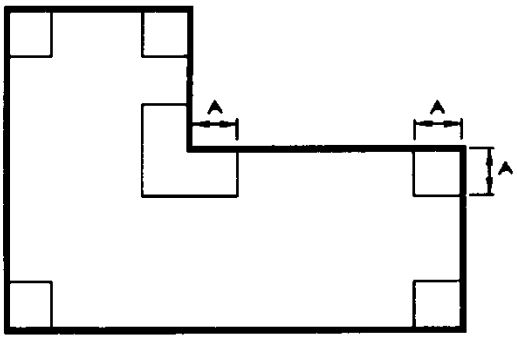

A (Corners) = .4 Times the Building Height
(10' minimum)

Ballast Requirements for 80 mph Warranty

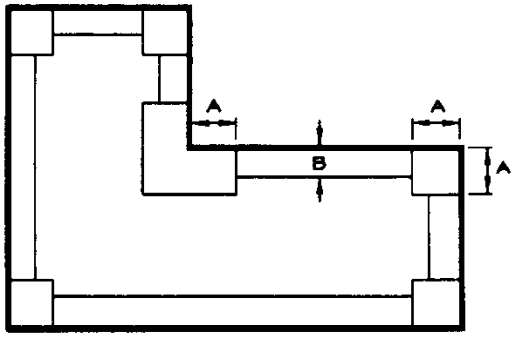

A (Corners) = .4 Times the Building Height
(10' minimum)
B (Perimeters) = 10'

2. At corner and/or perimeter areas, ballast shall be 2-1/2" nominal rounded water worn gravel conforming to gradation #1 or #2 in accordance with ASTM D7765 method of sizing. Coverage rate shall be a minimum of 15 pounds per square foot.

3. In field areas, ballast shall be 1-1/2" nominal rounded water worn gravel conforming to gradation #4 in accordance with ASTM D7765 method of sizing. Coverage rate shall be a minimum of 12 pounds per square foot.

4. Other ballasting configurations may be authorized by Versico, upon review and approval, prior to construction.

F. Roof Deck Criteria

1. Steel (22 gauge or heavier) **– HPV, HPV-XL or InsulTite Fasteners are required, with a minimum pullout of not less than 450 pounds per fastener.**

NOTE: Versico InsulTite fasteners may be used with adhered systems only, if the minimum pullout requirement is met.

2. Structural Concrete (minimum 3,000 psi) **– MP 14-10 (threaded) Fasteners are required with a minimum pullout of 800 pounds per fastener.** CD-10 (hammer-driven) is also applicable for adhered membrane assemblies. **In lieu of fastening, Flexible DASH Adhesive is an acceptable alternative for insulation attachment for adhered assembly when used in conjunction with coated glass faced insulation and full spray.**

   NOTE: The use of standard (paper) faced Polyisocyanurate is not acceptable. Due to possible presence of residual moisture in concrete slabs.

3. Wood Plank (minimum 1" thick) or minimum 3/4" thick Plywood **– HPV or InsulTite Fasteners are required with a minimum pullout of 450 pounds for plywood and 540 pounds for wood planks.**

   NOTE: Versico InsulTite fasteners may be used with adhered systems only if the minimum pullout requirement is met.

4. For **Ballasted Assemblies**, the structural deck must be able to sustain the weight of a ballasted assembly (12-15 lbs of ballast, as well as other components, i.e. membrane, insulation and vapor barriers, if applicable). The structural deck must be sufficient to support concentrated construction traffic and point loading.

G. Flashing, Terminations and Other Considerations (All Assemblies)

1. All existing flashing must be removed prior to the application of new membrane. New membrane flashing must not conceal weep holes or cover existing through wall counterflashing.

2. Wall flashings shall extend above the anticipated slush line, prior to written approval from Versico is required for lower heights of flashing.

3. Pre-fabricated accessories must be utilized, where applicable.

4. Project details must be reviewed by Versico, preferably prior to bid, and a written approval must be obtained. As a warranty prerequisite, the approval shall be included as part of the project submittals along with the Request for Warranty form that is required for project approval.

5. Only Versico supplied Sheet Metal and Edging is to be used on all projects unless prior authorization from Versico has been obtained.

6. Versico Termination Bar is required in locations where a compression bar termination has been specified. The Termination Bar must be used in conjunction with new or existing counterflashing.

7. Where new or existing counterflashing is used, Versico's Termination Bar must be used as the primary termination.

8. Certain metal accessories by others may be permitted upon Versico acceptance for wind speed coverage less than 72 mph.

THIS PAGE INTENTIONALLY BLANK

VersiGard® EPDM Roofing Systems
Fully Adhered, Ballasted and Mechanically Attached

Installation Details

TABLE OF CONTENTS

January 2024

Ballasted **Detail**
VersiTrim 200 ..... VGB-1.1
Deck to Deck Expansion Joint VGB-3.0

Mechanically Attached
VersiTrim 200 ..... VGMA-1.1
Mechanically Attached EPDM Securement – Option 1 ..... VGMA-2.0A
Mechanically Attached EPDM Securement – Option 2 (RTS) VGMA-2.0B
Mechanically Attached EPDM Securement – Option 3 (RTS) VGMA-2.0C
Mechanically Attached EPDM Membrane Splice VGMA-2.1
Mechanically Attached EPDM Membrane Splice (30 Year Warranty) VGMA-2.1A
Mechanically Attached EPDM Membrane Splice Intersection VGMA-2.2
Mechanically Attached EPDM Membrane Splice Intersection (30 Year Warranty) VGMA-2.2A
End Lap Splice VGMA-2.3
Roof Drain with Sump VGMA-6.0
Quick-Applied Pipe Seal VGMA-8.1
Quick-Applied Pipe Seal with 20” Quick-Applied (QA) Cured Flashing VGMA-8.1A
Field Fabricated Pipe Wrap VGMA-8.2
Ridge Membrane Attachment VGMA-22.0

Metal Edges and Gravel Stops
VersiTrim 200 ..... VGC-1.1
VersiTrim 200 (30 Year Warranty) VGC-1.1A
VersiTrim 300 ..... VGC-1.2
VersiTrim 300 (30 Year Warranty) VGC-1.2A
VersiTrim 2000 & 3000 ..... VGC-1.3
Versico Drip Edge Fascia VGC-1.4
Versico Drip Edge Fascia (30 Year Warranty) VGC-1.4A
VersiTrim One-piece Gravel Stop VGC-1.5
Metal Bar Edge Termination VGC-1.6

Membrane Splices
EPDM Membrane Splices VGC-2.1
EPDM Membrane Splices (30 Year Warranty) VGC-2.1A
EPDM Membrane Splice Intersection VGC-2.2
EPDM Membrane Splice Intersection (30 Year Warranty Or 90-mil Membrane) VGC-2.2A
EPDM Membrane Splices at Angle Change VGC-2.3

Expansion Joints
Deck-to-Deck Expansion Joint VGC-3.1
Deck-to-Wall Expansion Joint VGC-3.2
Shear/Expansion Cover VGC-3.3

Curb Flashing
Curb Flashing – EPDM Membrane…. VGC-5.1
Curb Flashing - Quick-Applied Curb Wrap with 6” Tape VGC-5.2
Curb Flashing – with 20” Quick-Applied Cured Flashing VGC-5.3

Self-Flashing Curb, Roof Hatch or Skylight VGC-5.4
New Self-Flashing Metal Curb VGC-5.5

Drains

Roof Drain VGC-6.1
Roof Drain – Reinforced Field Sheet with Sump Exceeding 3” Per Foot VGC-6.2
VersiGard Insert Drain VGC-6.3
Insert Drain Through Deck VGC-6.4
VersiGard Add-On Drain VGC-6.5

Pipe Flashing

Quick-Applied Pipe Seal with 90-mil Membrane or 30 Year Warranties VGC-8.1A
Field Fabricated Pipe Wrap VGC-8.2
Field Fabricated Pipe Wrap (30 Year Warranties) VGC-8.2A
Flexible Penetration VGC-8.3
Field Fabricated Hot Stack VGC-8.4
Field Fabricated Hot Stack (30 Year Warranties) VGC-8.4A

Terminations

Membrane Terminations, Page 1 of 3 ..... VGC-9.0A
Membrane Terminations, Page 2 of 3 ..... VGC-9.0B
Membrane Terminations, Page 3 of 3 ..... VGC-9.0C

Parapet / Curb Flashing

Parapet/Curb with Continuous Membrane VGC-12.1
Parapet/Curb with Separate Membrane Flashing VGC-12.2

Tie-Ins

Built-Up Roofing Tie-In over Steel Roof Deck VGC-13.1
Built-Up Roofing Tie-In over Concrete Roof Deck VGC-13.2
Tie-In to Existing EPDM Membrane VGC-13.3
EPDM Tie-In Over Concrete Deck VGC-13.4
Tie-In Shingled Or Metal Panel Roof VGC-13.5
Tie-In Between New Versico Adhered & Ballasted Roof VGC-13.6
Tie-In Between New Versico Mechanically Attached & Ballasted Roof VGC-13.7

Inside/Outside Corners

Inside Corner Wall Flashing with RTS (Option 1) VGC-15.1
Inside Corner Wall Flashing with RTS (Option 2) VGC-15.2
Inside Corner with Continuous EPDM Wall Flashing VGC-15.3
Inside Corner with Separate EPDM Wall Flashing VGC-15.4
Inside Corner Flashing for Projects with 90-mil Membrane or 30 Year Warranties VGC-15.4A
Outside Corner with Pre-Cut Quick-Applied Corner VGC-15.5
Outside Corner with Quick-Applied Uncured EPDM Flashing (2 Piece) VGC-15.6
Outside Corner with Quick-Applied Uncured EPDM Flashing (1 Piece) VGC-15.7
Outside Corner Flashing for Projects with 90-mil Membrane or 30 Year Warranties VGC-15.7A

Sealant Pocket

Quick-Applied Pourable Sealer Pocket VGC-16.1
Quick-Applied Pourable Sealer Pocket (30 Year Warranties) VGC-16.1A
Field Fabricated Pourable Sealer Pocket VGC-16.2
Field Fabricated Pourable Sealer Pocket (30 Year Warranties) VGC-16.2A
Extended Pourable Sealer Pocket VGC-16.3
Extended Pourable Sealer Pocket (30 Year Warranties) VGC-16.3A

Through-Wall Scupper

Metal Scupper at Deck VGC-18.1
Scupper: Double Layers Flashing – Page 1 of 2 ..... VGC-18.1A
Scupper: Double Layers Flashing – Page 2 of 2 ..... VGC-18.1A

Lightning Rod

Lightning Rod at Parapet (Vertical Attachment) VGC-20.1
Lightning Rod at Deck Level VGC-20.2

Valley

Valley VGC-22.0

Sleeper

Sleeper VGC-24.0

Penetration

I-Beam Penetration VGC-30.0

THIS PAGE INTENTIONALLY BLANK

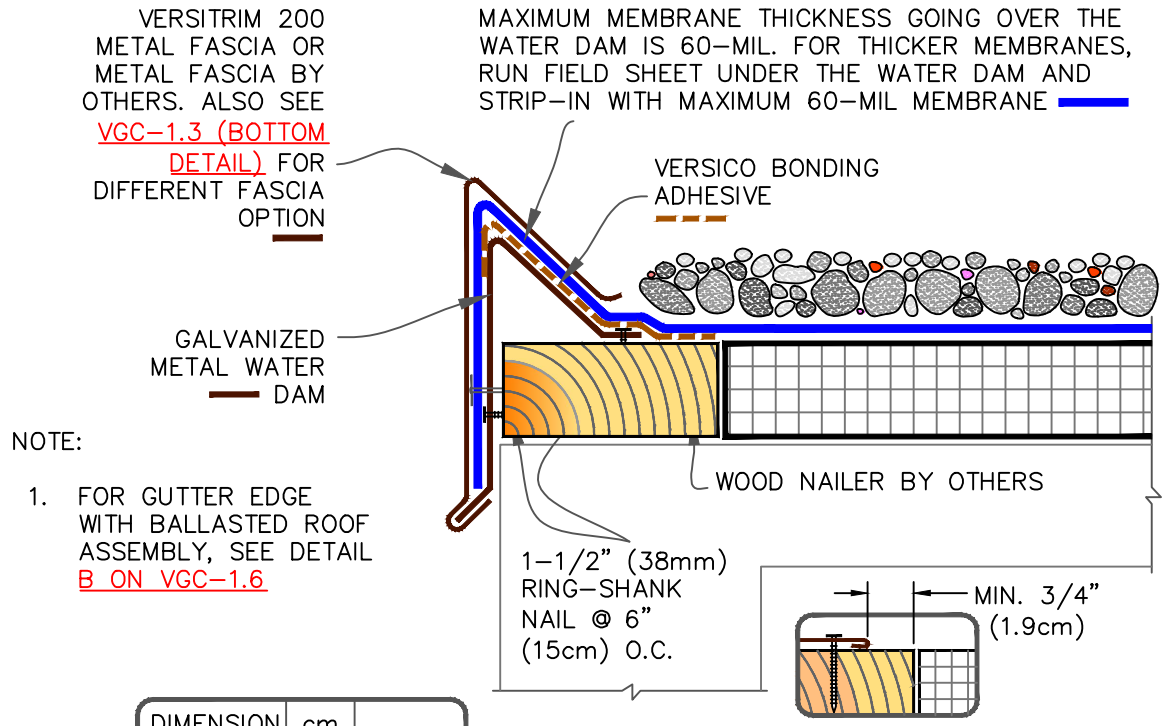

NOTE:

1. FOR GUTTER EDGE WITH BALLASTED ROOF ASSEMBLY, SEE DETAIL B ON VGC–1.6

DIMENSION		cm	
A	3"	7.5	MIN.

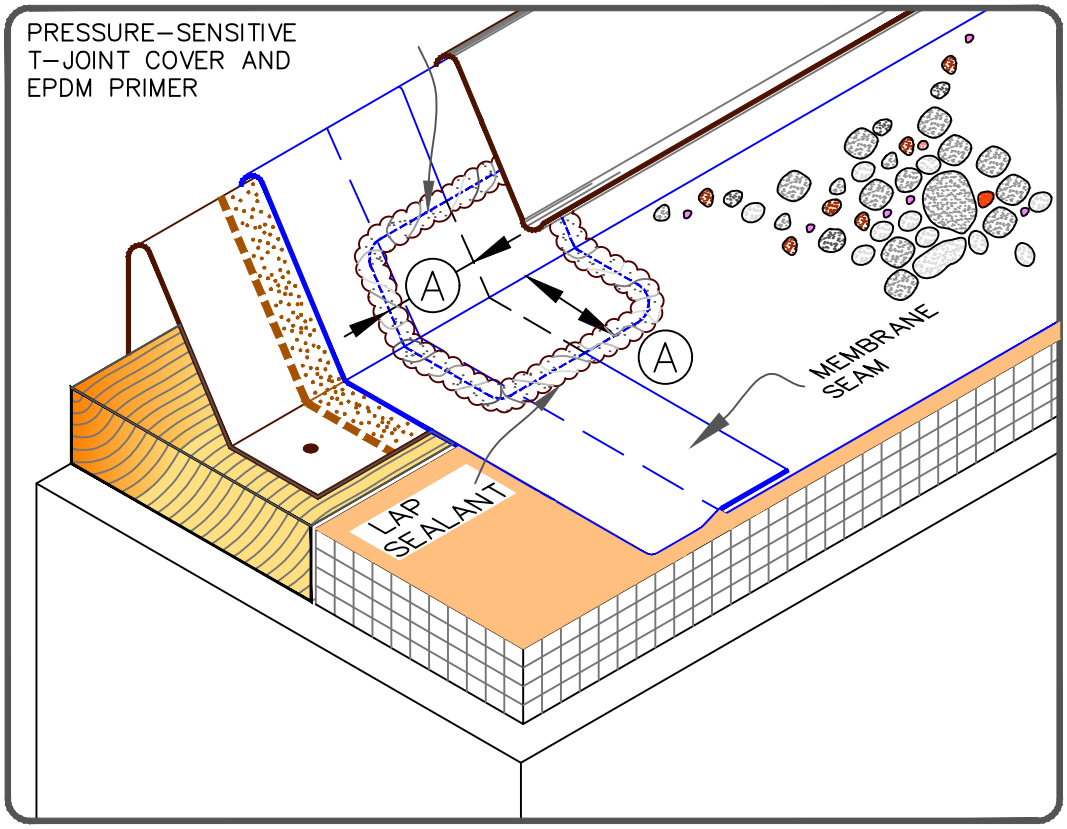

MAXIMUM WARRANTY: 30 YEARS

VERSICO ROOFING SYSTEMS
© 2024 VERSICO

VERSITRIM 200

EPDM MEMBRANE
APPROVED SUBSTRATE
0 SEE NOTE(S)

THERMOSET ROOFING SYSTEM

VGB–1.1

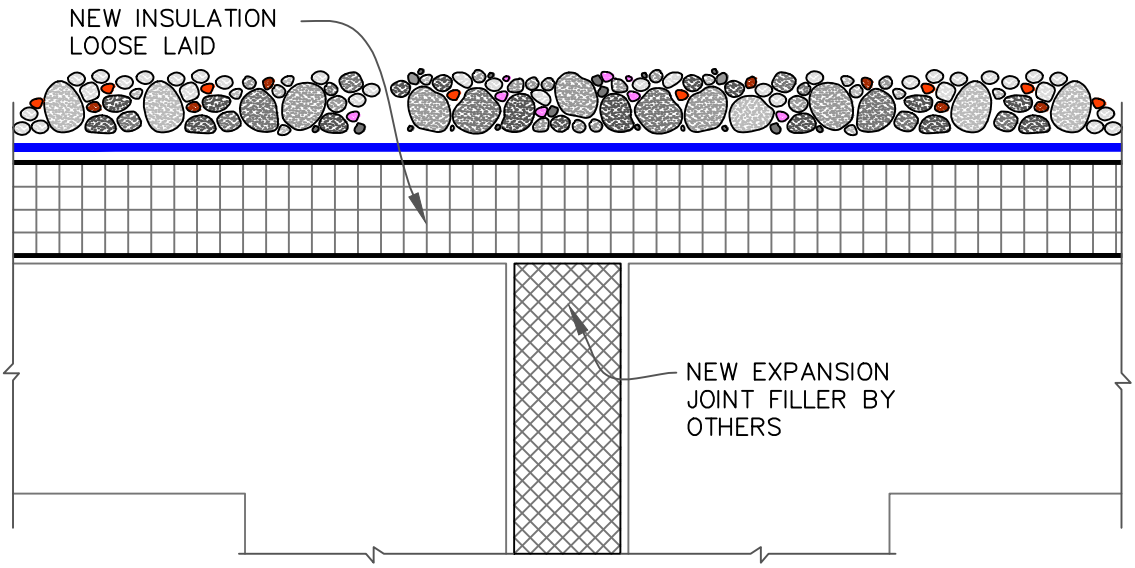

(A) NEW CONSTRUCTION OR REROOFING

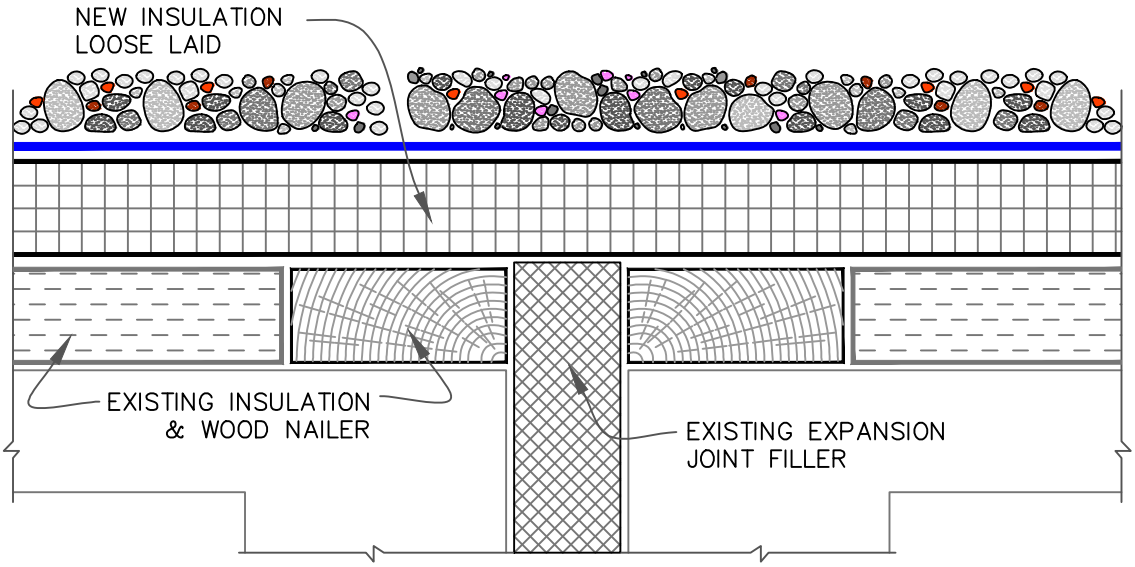

(B) REROOFING OR RECOVER OF EXISTING ROOF

NOTE:

1. ANY VGC–3 EXPANSION JOINT DETAIL CAN BE USED WITH THE "B" SYSTEM (BALLASTED STONE ASSEMBLY)

MAXIMUM WARRANTY: 30 YEARS

VERSICO ROOFING SYSTEMS

© 2024 VERSICO

DECK–TO–DECK EXPANSION JOINT

REINFORCED EPDM– UNLESS NOTED OTHERWISE

APPROVED SUBSTRATE

0 → SEE NOTE(S)

MECHANICALLY ATTACHED EPDM

VGB–3.0

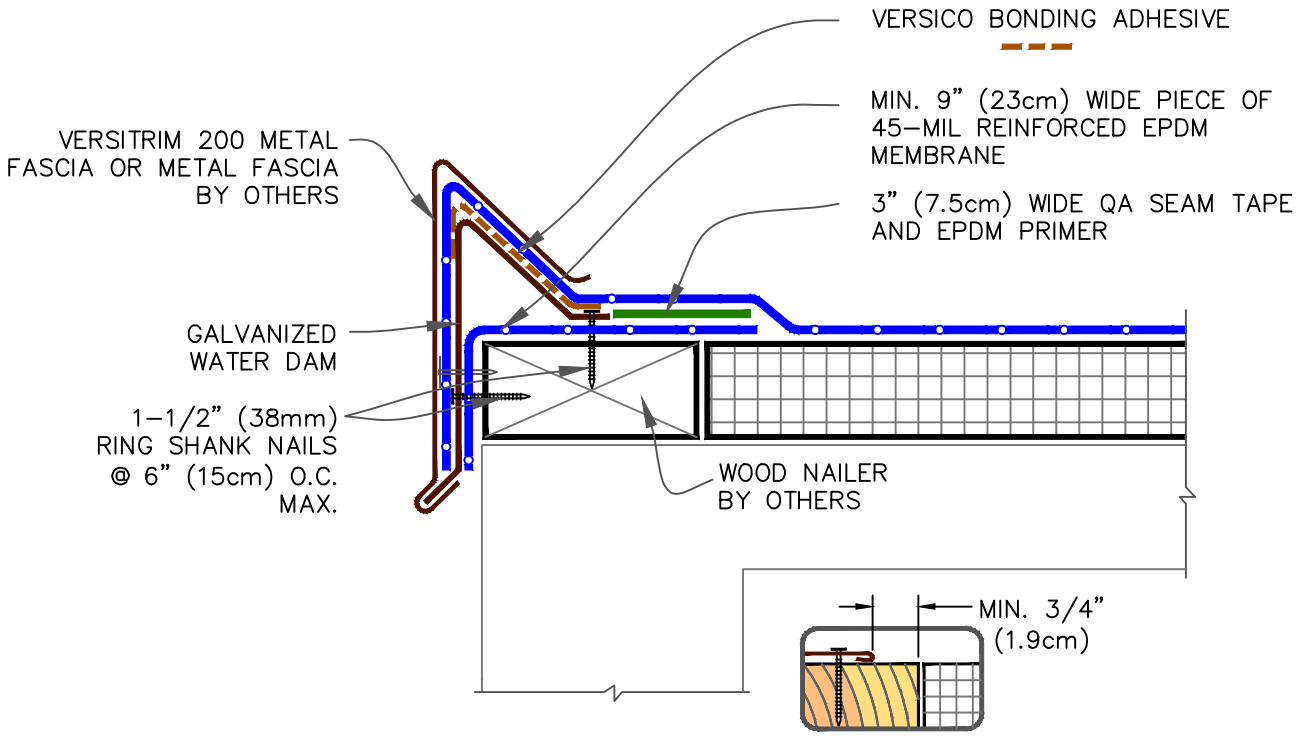

DIMENSION		cm	
A	3"	7.5	MIN.

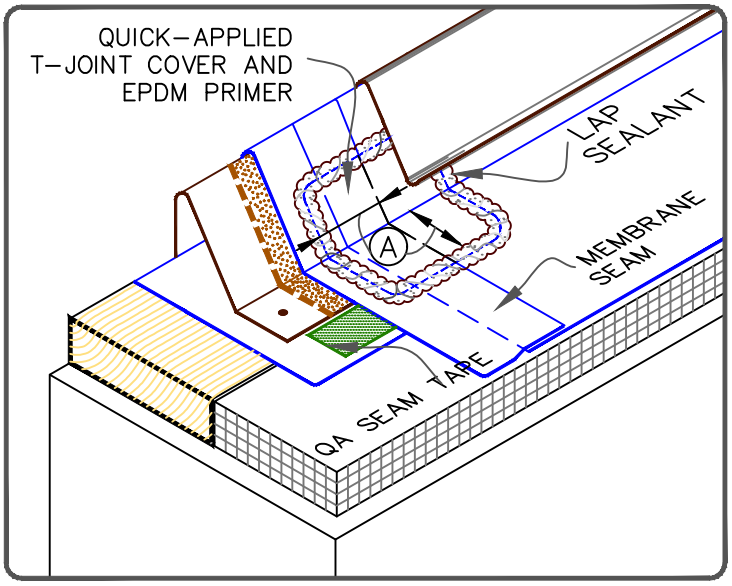

NOTE:

1. MAXIMUM MEMBRANE THICKNESS GOING OVER THE WATER DAM IS 60-MIL. FOR THICKER MEMBRANES, RUN FIELD SHEET UNDER THE WATER DAM AND STRIP-IN WITH MAXIMUM 60-MIL MEMBRANE.

MAXIMUM WARRANTY: 30 YEARS

VERSICO ROOFING SYSTEMS

© 2024 VERSICO

VERSITIRM 200

REINFORCED EPDM- UNLESS NOTED OTHERWISE

APPROVED SUBSTRATE

0 → SEE NOTE(S)

MECHANICALLY ATTACHED EPDM

VGMA-1.1

GUIDELINES FOR ROOF PERIMETER ZONES FOR MECHANICALLY ATTACHED ROOF SYSTEM

PERIMETER ZONES

SPLIT LEVEL ROOFS

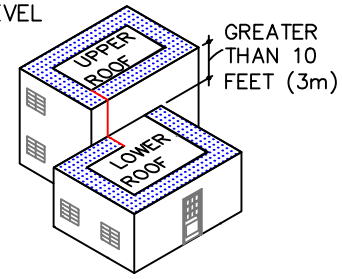

SPLIT LEVEL ROOFS

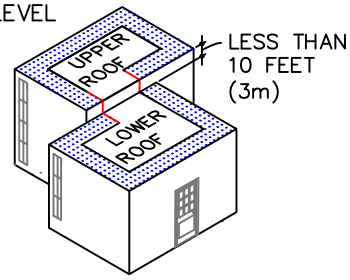

CANOPY ROOF

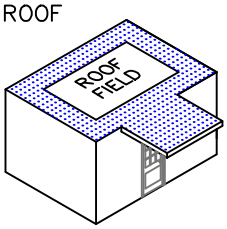

INSTALL PERIMETER SHEETS OVER THE ENTIRE OVERHANG (PROJECTION ROOF) AREA, EXTENDING ONTO THE MAIN ROOF DECK WHEN AT THE SAME LEVEL AS SHOWN.

LARGE OPENINGS OR LOADING DOCKS

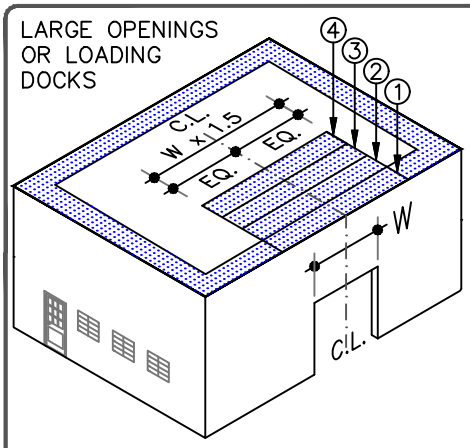

4 PERIMETER SHEETS CENTERED OVER LARGE OPENINGS

MAXIMUM WARRANTY: 30 YEARS

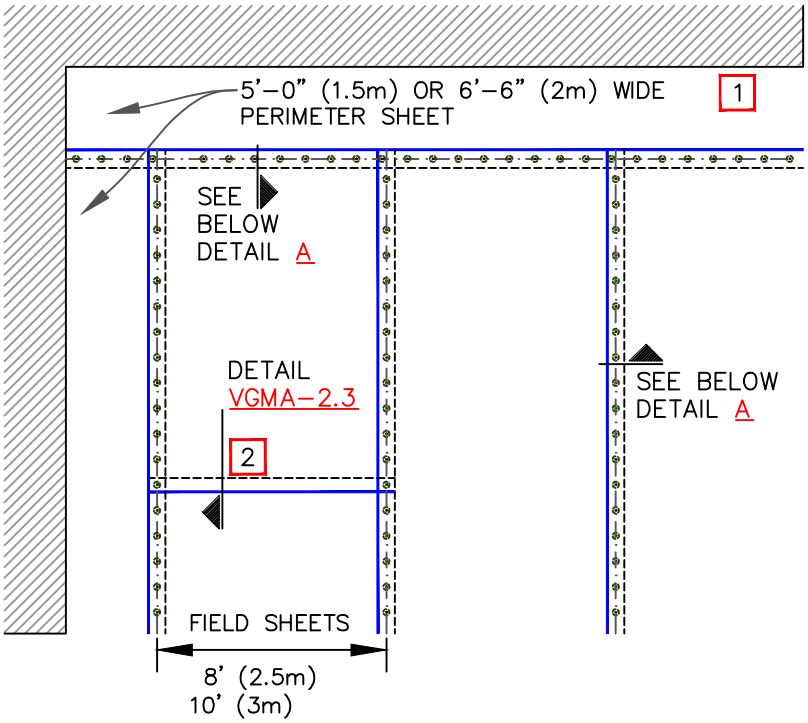

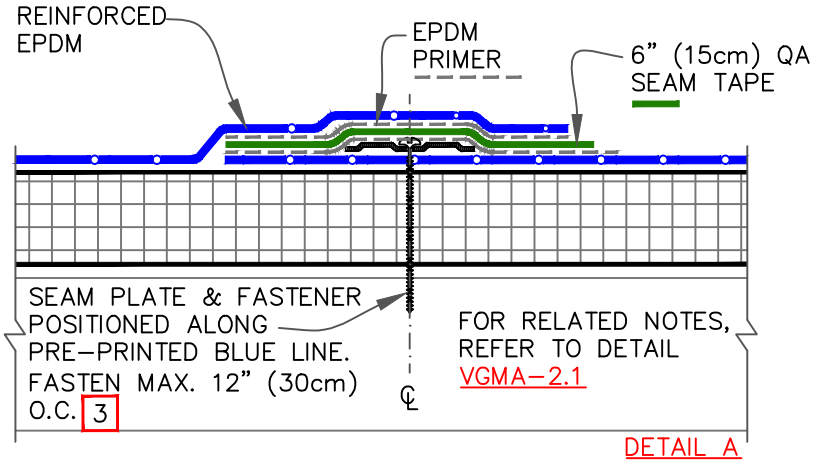

NOTES:

1. REFER TO VERSICO SPECIFICATIONS FOR REQUIRED NUMBER OF PERIMETER SHEETS, SHEET WIDTH AND MEMBRANE FASTENING DENSITY.
2. END LAPS DO NOT REQUIRE MECHANICAL FASTENING AND SHALL BE SPLICED USING EITHER 3" (7.5cm) OR 6" (15cm) WIDE QA SEAM TAPE. PER DETAIL VGMA-2.3.
3. HPX FASTENERS AND POLYMER SEAM PLATES ARE REQUIRED OVER STEEL DECKS.

VERSICO ROOFING SYSTEMS

© 2024 VERSICO

MECHANICALLY ATTACHED EPDM SECUREMENT – OPTION 1

REINFORCED EPDM– UNLESS NOTED OTHERWISE

APPROVED SUBSTRATE

0 → SEE NOTE(S)

MECHANICALLY ATTACHED EPDM

VGMA-2.0A

GUIDELINES FOR ROOF PERIMETER ZONES FOR MECHANICALLY ATTACHED ROOF SYSTEM

PERIMETER ZONES

SPLIT LEVEL ROOFS

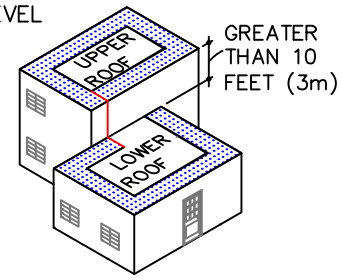

SPLIT LEVEL ROOFS

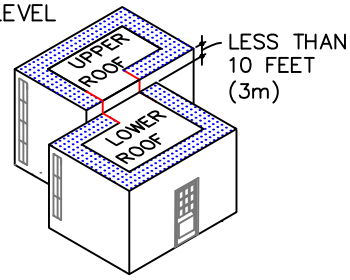

CANOPY ROOF

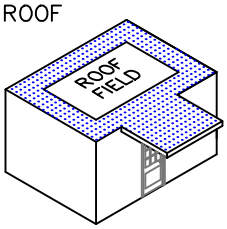

INSTALL PERIMETER SHEETS OVER THE ENTIRE OVERHANG (PROJECTION ROOF) AREA, EXTENDING ONTO THE MAIN ROOF DECK WHEN AT THE SAME LEVEL AS SHOWN.

LARGE OPENINGS OR LOADING DOCKS

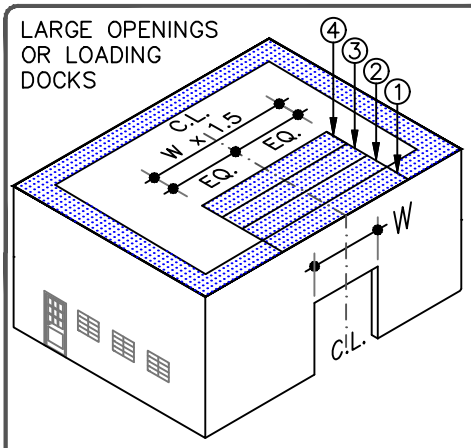

4 PERIMETER SHEETS CENTERED OVER LARGE OPENINGS

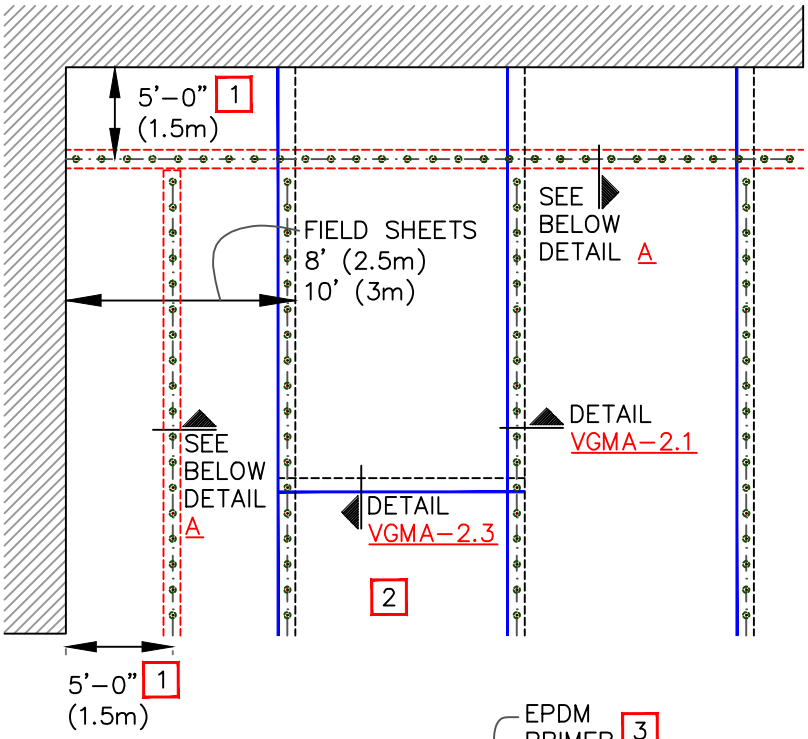

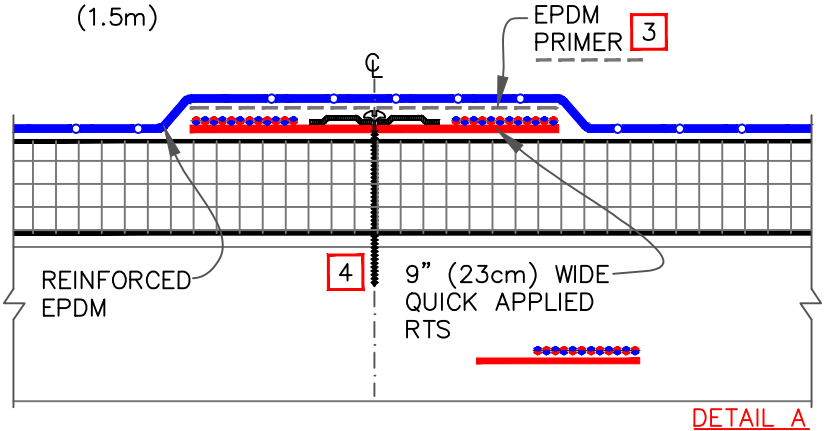

DETAIL A

NOTES:

1. REFER TO VERSICO SPECIFICATIONS FOR REQUIRED NUMBER OF PERIMETER SHEETS, SHEET WIDTH AND MEMBRANE FASTENING DENSITY.
2. END LAPS DO NOT REQUIRE MECHANICAL FASTENING AND SHALL BE SPLICED USING EITHER 3" (7.5cm) OR 6" (15cm) WIDE QA SEAM TAPE. PER DETAIL VGMA–2.3.
3. EPDM PRIMER MUST BE APPLIED TO THE BACK SIDE OF MEMBRANE SURFACE PRIOR TO ADHERING MEMBRANE TO QUICK APPLIED RTS.
4. HPX FASTENERS AND POLYMER SEAM PLATES ARE REQUIRED OVER STEEL DECKS.

MAXIMUM WARRANTY: 30 YEARS

VERSICO ROOFING SYSTEMS

© 2024 VERSICO

MECHANICALLY ATTACHED EPDM SECUREMENT – OPTION 2 (RTS)

REINFORCED EPDM– UNLESS NOTED OTHERWISE

APPROVED SUBSTRATE

0 → SEE NOTE(S)

MECHANICALLY ATTACHED EPDM

VGMA–2.0B

GUIDELINES FOR ROOF PERIMETER ZONES FOR MECHANICALLY ATTACHED ROOF SYSTEM

PERIMETER ZONES

SPLIT LEVEL ROOFS

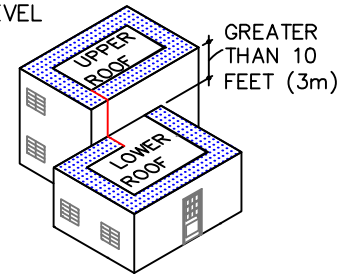

SPLIT LEVEL ROOFS

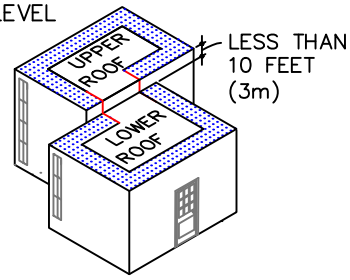

CANOPY ROOF

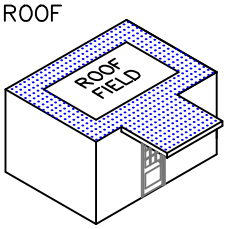

INSTALL PERIMETER SHEETS OVER THE ENTIRE OVERHANG (PROJECTION ROOF) AREA, EXTENDING ONTO THE MAIN ROOF DECK WHEN AT THE SAME LEVEL AS SHOWN.

LARGE OPENINGS OR LOADING DOCKS

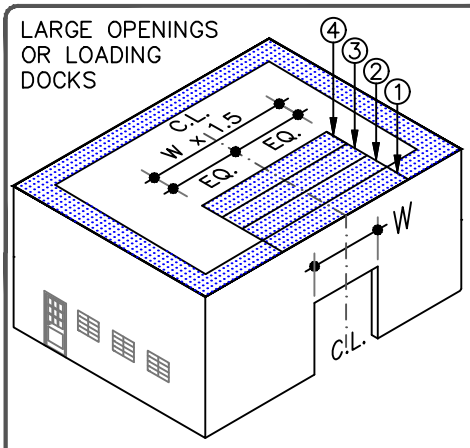

4 PERIMETER SHEETS CENTERED OVER LARGE OPENINGS

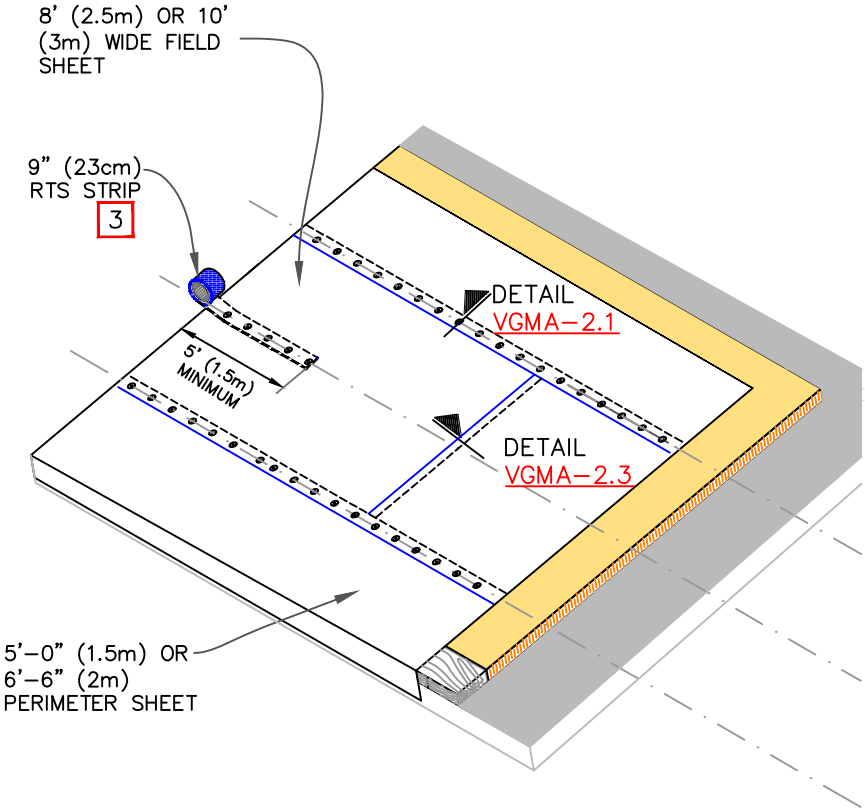

NOTES:

1. REFER TO VERSICO SPECIFICATIONS FOR REQUIRED NUMBER OF PERIMETER SHEETS, SHEET WIDTH AND MEMBRANE FASTENING DENSITY.
2. HPX FASTENERS AND POLYMER SEAM PLATES ARE REQUIRED OVER STEEL DECKS.
3. RTS "FINGER" MUST EXTEND THE WIDTH OF THE REQUIRED PERIMETER.

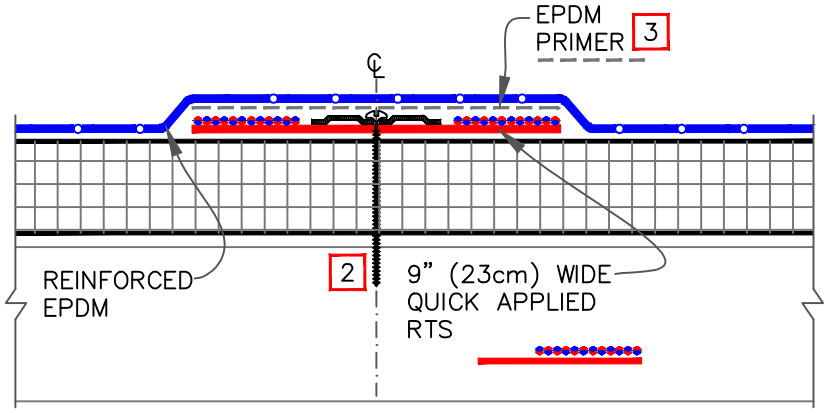

MAXIMUM WARRANTY: 30 YEARS

VERSICO ROOFING SYSTEMS

© 2024 VERSICO

MECHANICALLY ATTACHED EPDM SECUREMENT – OPTION 3 (RTS)

REINFORCED EPDM– UNLESS NOTED OTHERWISE

APPROVED SUBSTRATE

0 → SEE NOTE(S)

MECHANICALLY ATTACHED EPDM

VGMA–2.0C

6" (15cm) WIDE QA SEAM TAPE SPLICE

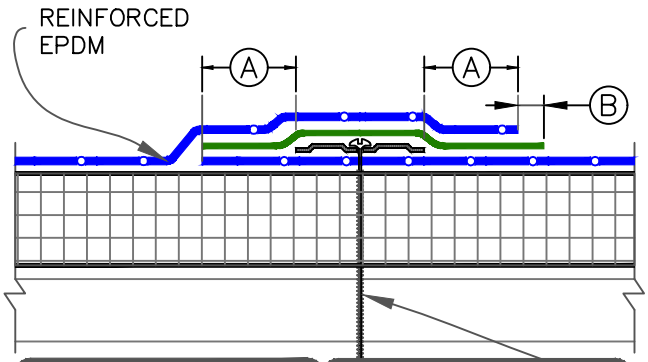

DIMENSIONS		cm	
A	2"	5	

DIMENSIONS		cm	
B	1/8"	0.5	TO
	1/2"	1.5	

6" (15cm) WIDE FACTORY APPLIED TAPE

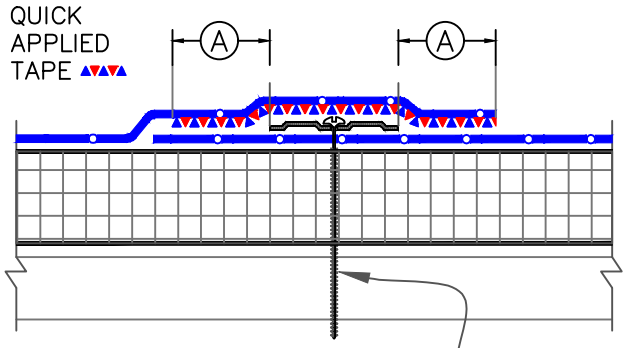

SEAM PLATE & FASTENER POSITIONED OVER PRE-PRINTED BLUE MARKS. FASTEN MAX. 12" (30cm) O.C. 1

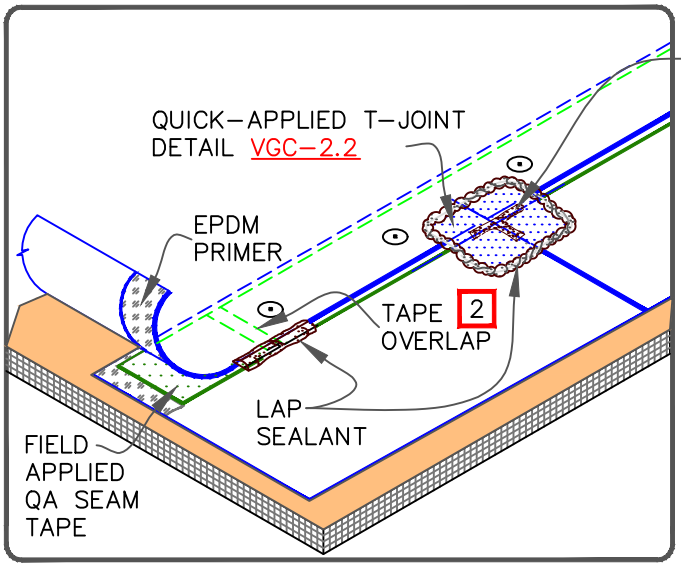

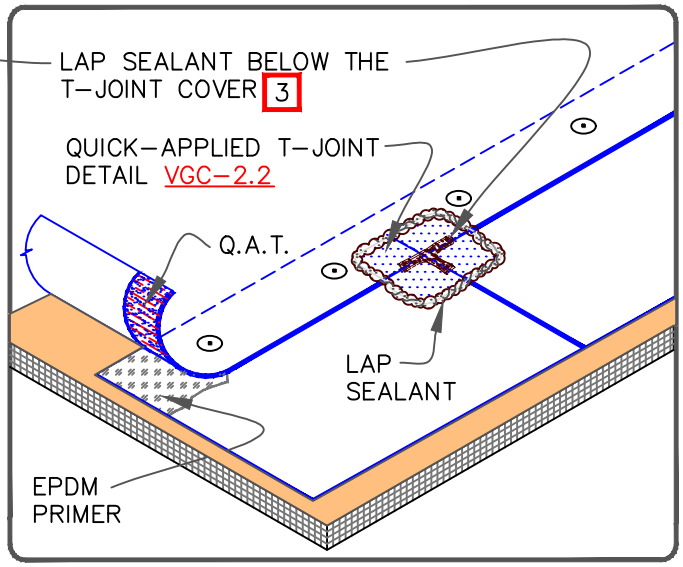

NOTES:

1. HPX FASTENERS AND POLYMER SEAM PLATES ARE REQUIRED OVER STEEL DECKS.
2. OVERLAP THE ENDS OF FIELD APPLIED QA SEAM TAPE A MINIMUM OF 1" (2.5cm). APPLY LAP SEALANT AT TAPE OVERLAPS 2" (5cm) IN EACH DIRECTION AS SHOWN.
3. APPLY LAP SEALANT ALONG THE LEADING EDGE OF THE MEMBRANE SPLICE UNDER THE 6" (15cm) T-JOINT COVER, COVERING THE EXPOSED SPLICE TAPE 1/2" (1.5cm) IN ALL DIRECTIONS FROM THE SPLICE INTERSECTION.
4. END LAPS SHALL BE SPLICED USING 3" (7.5cm) WIDE QA SEAM TAPE. REFER TO DETAIL VGMA-2.2.
5. LAP SEALANT IS REQUIRED ON CUT EDGES OF REINFORCED EPDM MEMBRANE.

MAXIMUM WARRANTY: 25 YEARS

VERSICO ROOFING SYSTEMS
© 2024 VERSICO

MECHANICALLY ATTACHED EPDM MEMBRANE SPLICE

→ EPDM MEMBRANE
→ APPROVED SUBSTRATE
0 → SEE NOTE(S)

VersiGard MECHANICALLY ATTACHED (EPDM)

VGMA-2.1

FIELD APPLIED QA SEAM TAPE

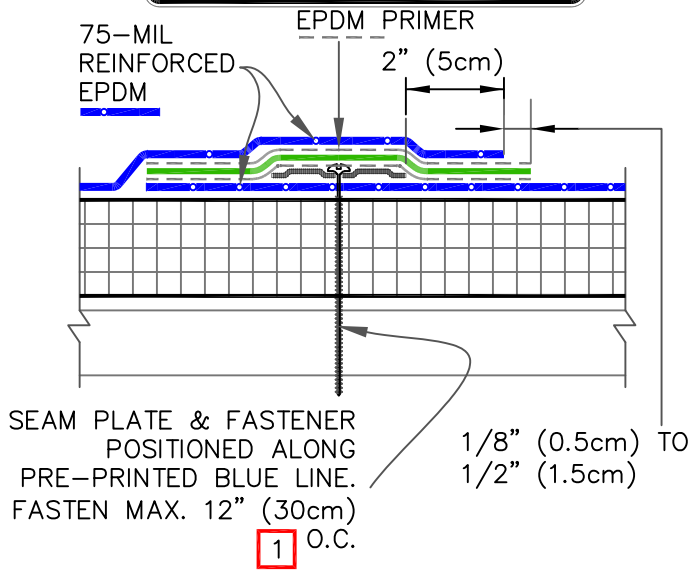

QUICK APPLIED SEAM TAPE

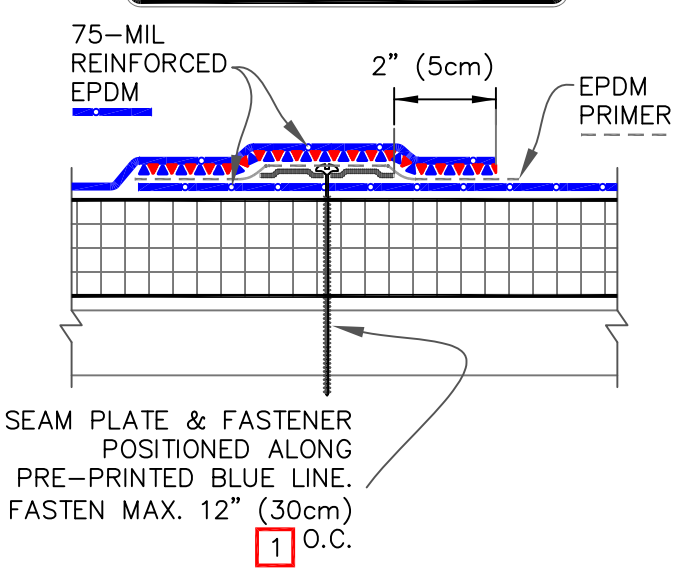

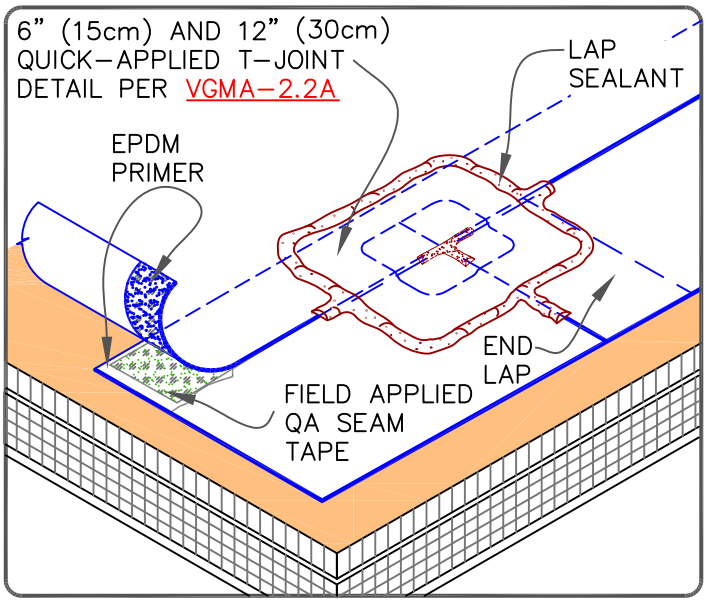

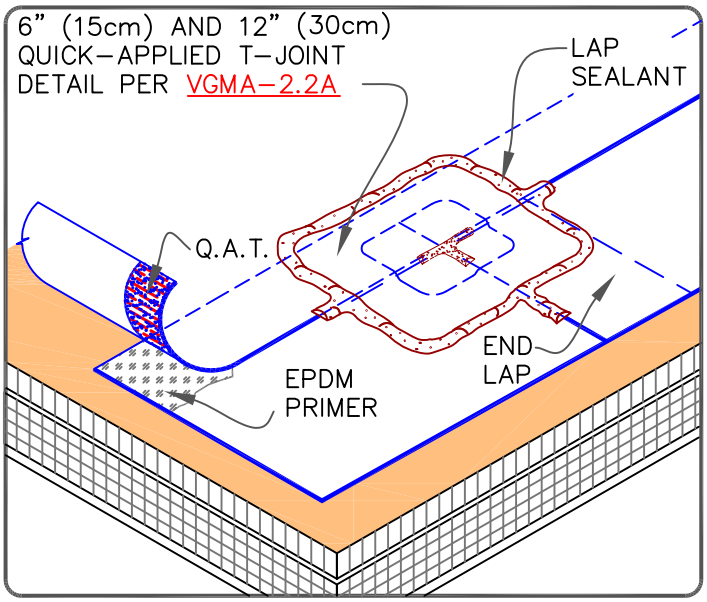

NOTES:

1. HPX FASTENERS AND POLYMER SEAM PLATES ARE REQUIRED OVER STEEL DECKS.
2. END LAPS SHALL BE SPLICED USING 6" (15cm) WIDE QA SEAM TAPE. REFER TO DETAIL VGC–2.1A.
3. OVERLAP THE ENDS OF FIELD APPLIED QA SEAM TAPE A MINIMUM OF 1" (2.5cm). APPLY LAP SEALANT AT TAPE OVERLAPS 2" (5cm) IN ALL DIRECTIONS.
4. LAP SEALANT IS REQUIRED ON CUT EDGES OF REINFORCED EPDM MEMBRANE.

MAXIMUM WARRANTY: 30 YEARS

VERSICO ROOFING SYSTEMS
© 2024 VERSICO

MECHANICALLY ATTACHED EPDM MEMBRANE SPLICE (30 YEAR WARRANTIES)

→ EPDM MEMBRANE
→ APPROVED SUBSTRATE
0 → SEE NOTE(S)

VersiGard MECHANICALLY ATTACHED (EPDM)

VGMA–2.1A

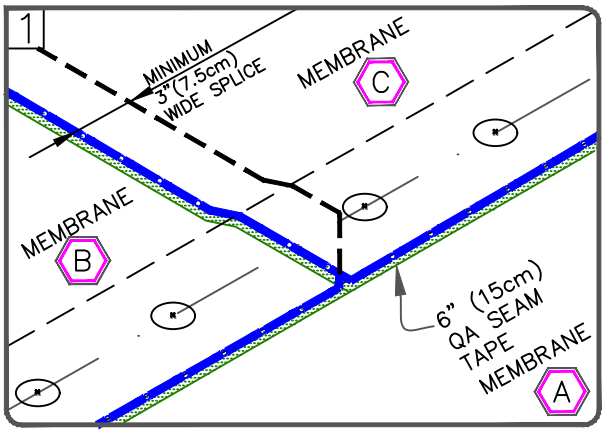

POSITION MEMBRANE TO ALLOW AN APPROXIMATE 7" (17.5cm) OVERLAP ALONG THE LENGTH OF THE MEMBRANE & 4" (10cm) AT END LAPS. THE PRE-MARKED LINE ON THE MEMBRANE EDGE CAN BE USED AS A GUIDE FOR TAPE PLACEMENT.

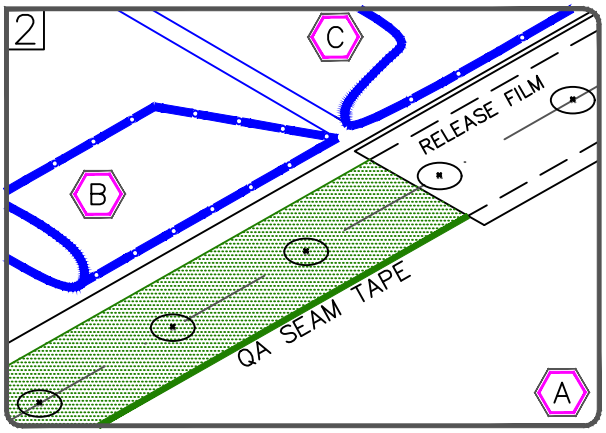

FOLD SHEETS BACK AS SHOWN. APPLY EPDM PRIMER TO THE SPLICE AREA ON BOTH SURFACES AND ALLOW TO FLASH-OFF. APPLY QA SEAM TAPE WITH RELEASE FILM ALIGNED WITH PRE-MARKED LINE.

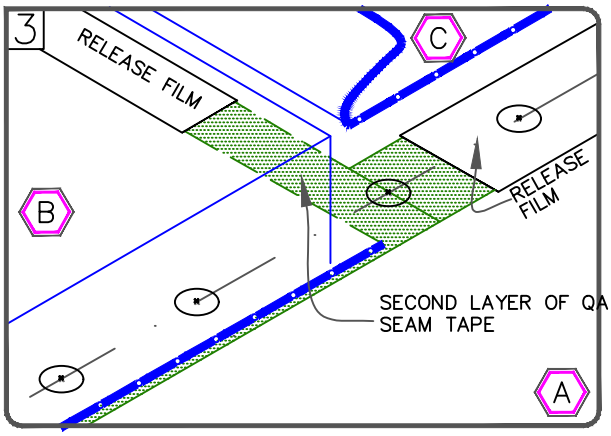

SPLICE SHEET B TO SHEET A AND APPLY SECOND PIECE OF QA SEAM TAPE BETWEEN SHEET B AND C. TRIM RELEASE FILM AS SHOWN.

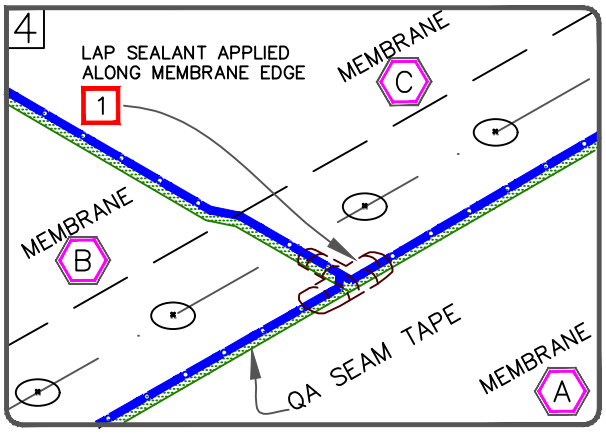

SPLICE SHEET C TO SHEET A AND B, PRESS TOP SHEET ONTO BOTTOM SHEET USING HAND PRESSURE TOWARDS THE OUTER EDGE OF THE SPLICE AND ROLL THE SPLICE AREA WITH A 2" (5cm) WIDE STEEL ROLLER.

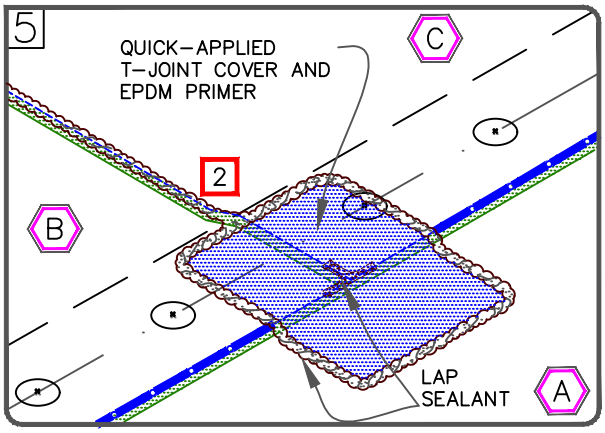

APPLY QUICK-APPLIED T-JOINT COVER OR 6" (15cm) WIDE SECTION OF QUICK-APPLIED UNCURED FLASHING CENTERED OVER THE INTERSECTING POINT OF THE LEADING EDGES OF THE FIELD SPLICE INTERSECTION AS SHOWN.

MAXIMUM WARRANTY: 25 YEARS

NOTES:

1. APPLY LAP SEALANT ALONG THE EDGE OF THE MEMBRANE SPLICE (BELOW THE 6" (15cm) T-JOINT COVER) COVERING THE EXPOSED SPLICE TAPE 1/2" (1.5cm) IN EACH DIRECTION FROM THE SPLICE INTERSECTION.

2. APPLY LAP SEALANT AT CUT EDGES OF REINFORCED MEMBRANE AND TAPE OVERLAPS. REFER TO DETAIL VGMA-2.1

VERSICO ROOFING SYSTEMS

© 2024 VERSICO

MECHANICALLY ATTACHED EPDM MEMBRANE SPLICE INTERSECTION

→ EPDM MEMBRANE
→ APPROVED SUBSTRATE
0 → SEE NOTE(S)

VersiGard MECHANICALLY ATTACHED (EPDM)

VGMA-2.2

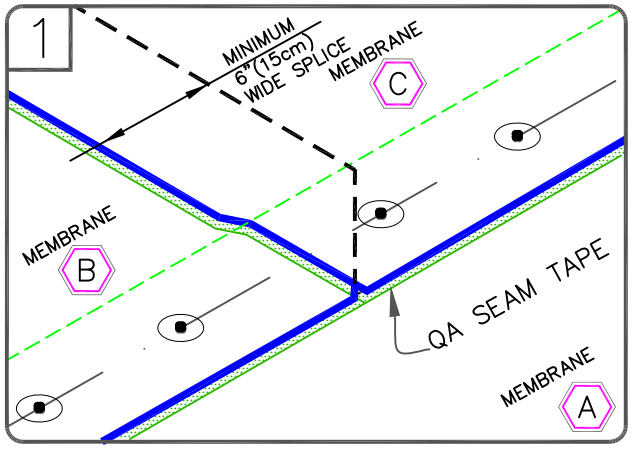

POSITION MEMBRANE TO ALLOW AN APPROXIMATE 7" (17.5cm) OVERLAP. THE PRE-MARKED LINE ON THE MEMBRANE EDGE CAN BE USED AS A GUIDE FOR TAPE PLACEMENT.

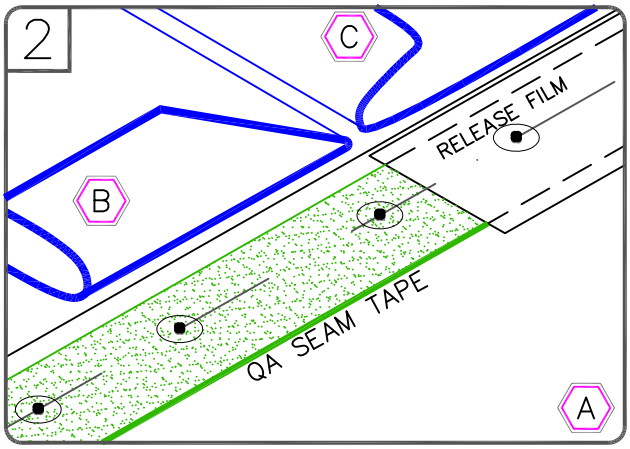

FOLD SHEETS BACK AS SHOWN. APPLY EPDM PRIMER TO THE SPLICE AREA ON BOTH SURFACES AND ALLOW TO FLASH-OFF. APPLY QA SEAM TAPE WITH RELEASE FILM ALIGNED WITH PRE-MARKED LINE.

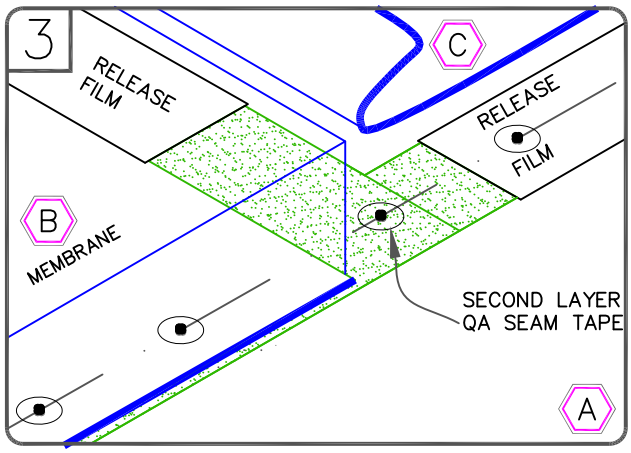

SPLICE SHEET B TO SHEET A AND APPLY SECOND PIECE OF QA SEAM TAPE BETWEEN SHEET B AND C. TRIM RELEASE FILM AS SHOWN.

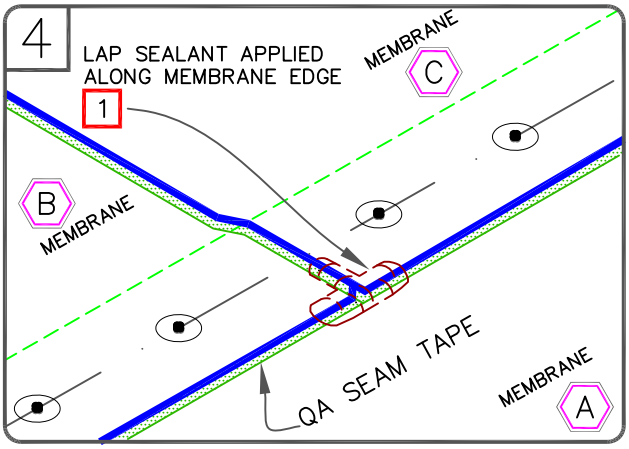

SPLICE SHEET C TO SHEET A AND B, PRESS TOP SHEET ONTO BOTTOM SHEET USING HAND PRESSURE TOWARDS THE OUTER EDGE OF THE SPLICE AND ROLL THE SPLICE AREA WITH A 2" (5cm) WIDE STEEL ROLLER.

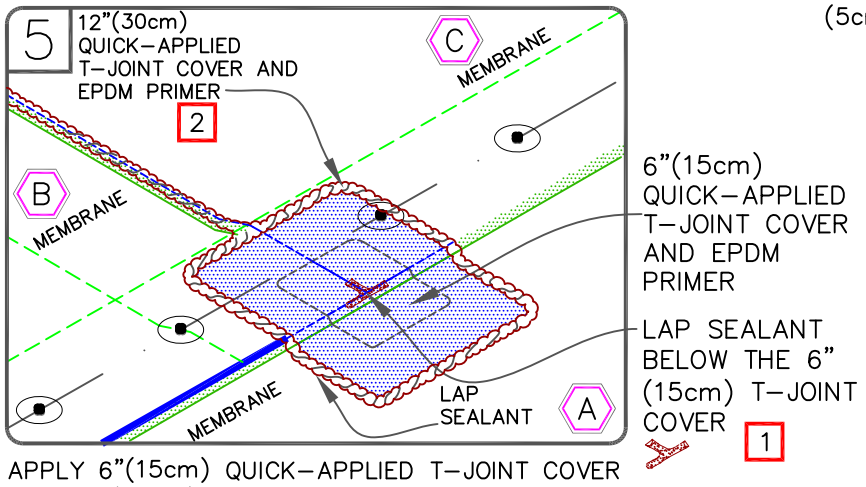

APPLY 6"(15cm) QUICK-APPLIED T-JOINT COVER AND 12"(30cm) QUICK-APPLIED T-JOINT COVER OR QUICK-APPLIED UNCURED CENTERED OVER THE INTERSECTING POINT OF THE LEADING EDGES OF THE FIELD SPLICE INTERSECTION AS SHOWN.

MAXIMUM WARRANTY: 30 YEARS

NOTES:

1. APPLY LAP SEALANT ALONG THE EDGES OF THE MEMBRANE SPLICE COVERING THE EXPOSED SPLICE TAPE 1/2" (1.5cm) IN EACH DIRECTION FROM THE SPLICE INTERSECTION.
2. APPLY LAP SEALANT AT CUT EDGES OF REINFORCED MEMBRANE AND TAPE OVER LAPS.

VERSICO ROOFING SYSTEMS

© 2024 VERSICO

MECHANICALLY ATTACHED EPDM MEMBRANE SPLICE INTERSECTION (30 YEAR WARRANTIES)

→ EPDM MEMBRANE
→ APPROVED SUBSTRATE
0 → SEE NOTE(S)

VersiGard MECHANICALLY ATTACHED (EPDM)

VGMA-2.2A

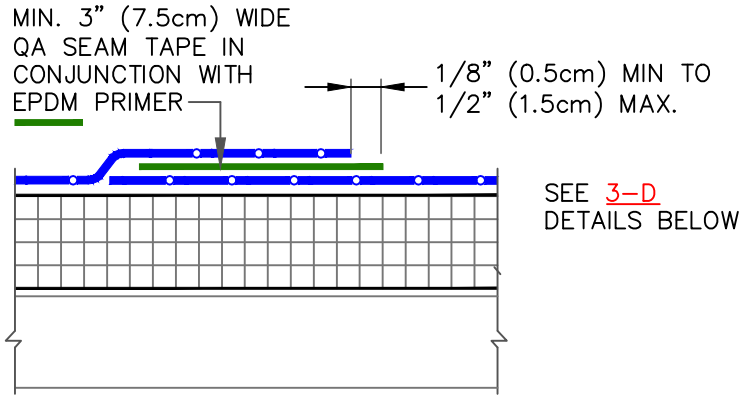

UP TO 20 YEAR WARRANTY

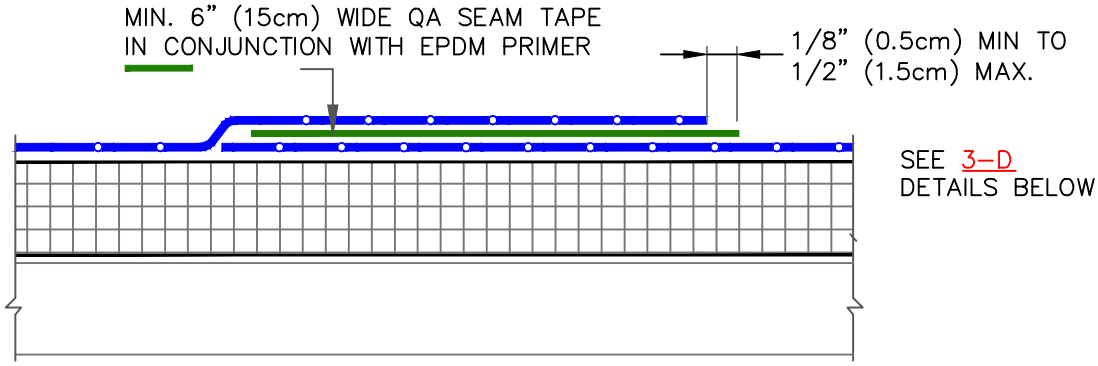

UP TO 30 YEAR WARRANTY

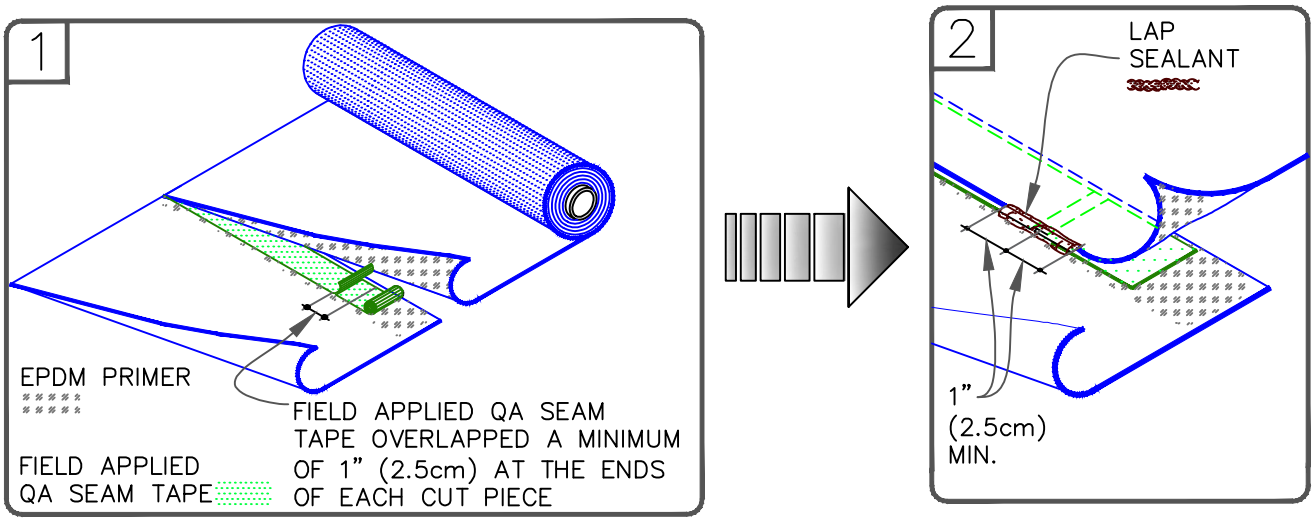

NOTES:

1. APPLY EPDM PRIMER TO THE MEMBRANE SURFACES PRIOR TO INSTALLING QUICK-APPLIED FLASHING.
2. LAP SEALANT IS REQUIRED ON CUT EDGES OF REINFORCED EPDM MEMBRANE.

MAXIMUM WARRANTY: 30 YEARS

VERSICO ROOFING SYSTEMS
© 2024 VERSICO

END LAP SPLICE

REINFORCED EPDM– UNLESS NOTED OTHERWISE
APPROVED SUBSTRATE
0 → SEE NOTE(S)

MECHANICALLY ATTACHED EPDM

VGMA–2.3

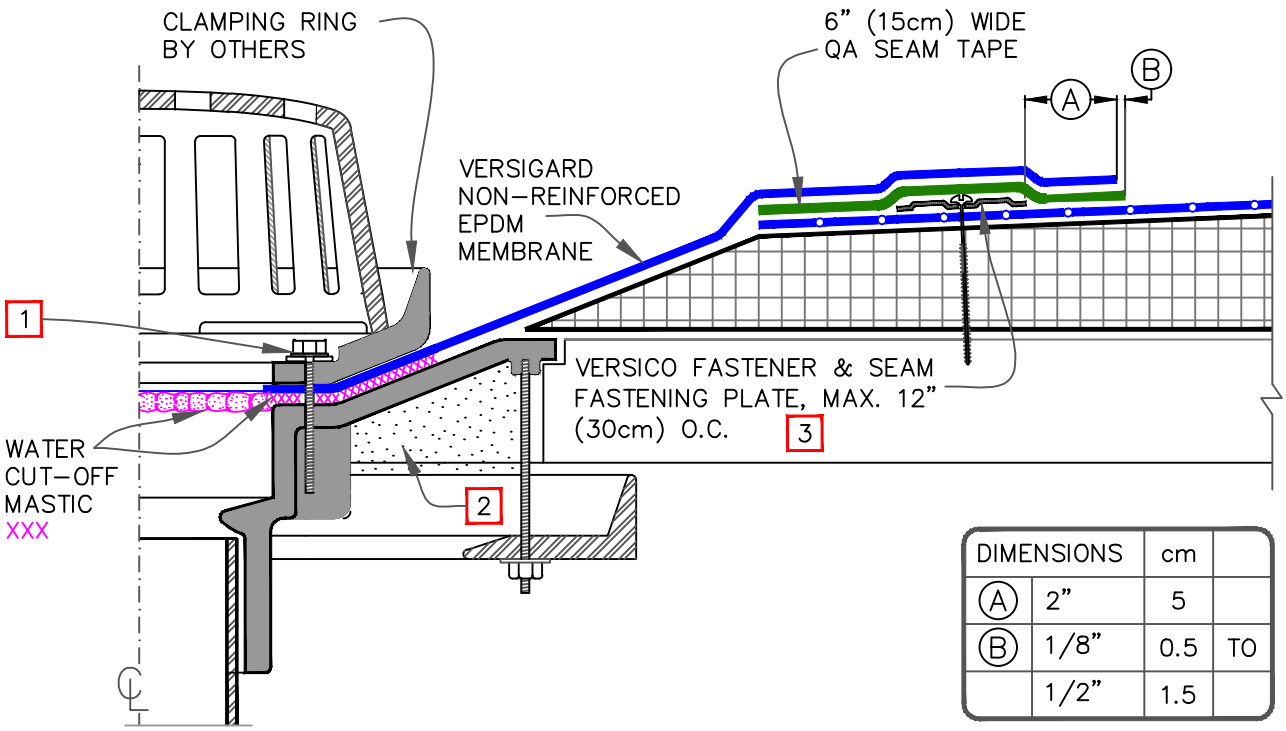

DIMENSIONS		cm	
A	2"	5	
B	1/8"	0.5	TO
	1/2"	1.5	

NOTES:

1. ALL BOLTS OR CLAMPS MUST BE IN PLACE TO PROVIDE CONSTANT COMPRESSION ON WATER CUT-OFF MASTIC.
2. REMOVE EXISTING LEAD, FLASHING MATERIAL & ENSURE THE DRAIN RING IS COMPLETELY CLEAN DOWN TO BARE METAL.
3. HPX FASTENERS AND POLYMER SEAM PLATES ARE REQUIRED OVER STEEL DECKS.
4. THE HOLE IN THE MEMBRANE SHALL EXCEED THE DIAMETER OF THE DRAIN PIPE, BUT SHALL BE NO LESS THAN 1/2" (1.5cm) FROM THE ATTACHMENT POINTS OF THE DRAIN CLAMPING RING.
5. ROOF DRAIN SIZE AND NUMBER OF DRAINS SHALL BE IN ACCORDANCE WITH THE LOCAL CODES.

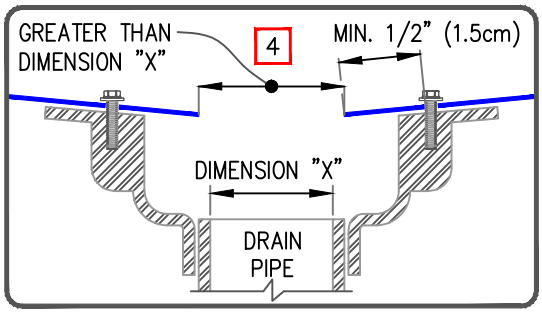

MAXIMUM WARRANTY: 30 YEARS

VERSICO ROOFING SYSTEMS
© 2024 VERSICO

ROOF DRAIN WITH SUMP

REINFORCED EPDM– UNLESS NOTED OTHERWISE
APPROVED SUBSTRATE
0 SEE NOTE(S)

MECHANICALLY ATTACHED EPDM

VGMA–6.0

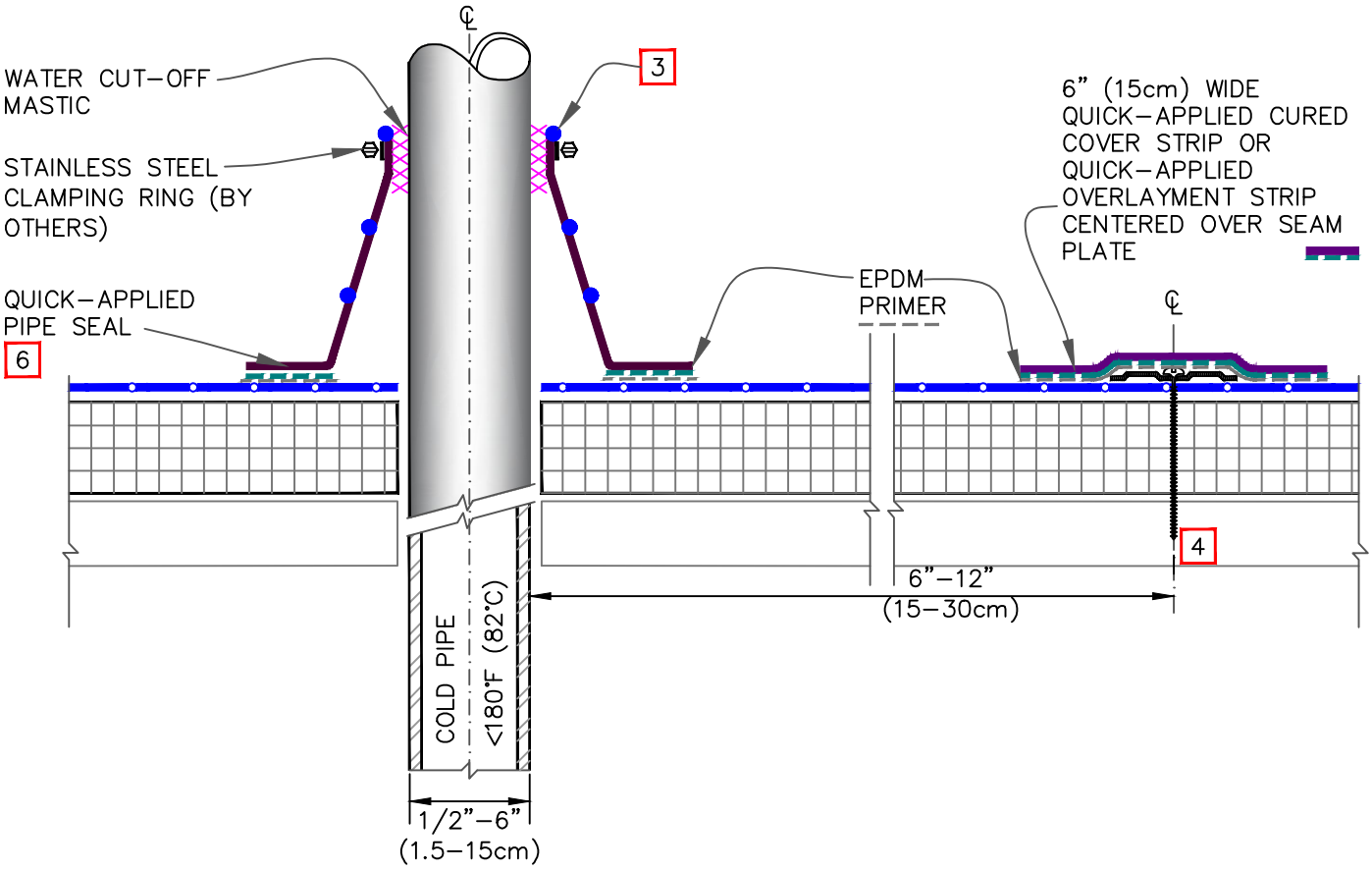

NOTES:

1. REMOVE ALL LEAD AND OTHER FLASHING BEFORE INSTALLING PIPE SEAL.
2. TEMPERATURE OF PIPE MUST NOT EXCEED 180°F (82°C).
3. PRE-MOLDED PIPE SEAL MUST HAVE RIB INTACT AT THE TOP EDGE REGARDLESS OF PIPE DIAMETER.
4. INSTALL A MINIMUM OF 4 SEAM PLATES FOR PIPES WITH A DIAMETER UP TO 6" (15cm). ADDITIONAL SEAM PLATES WILL BE REQUIRED FOR PIPES GREATER THAN 6" (15cm) IN DIAMETER AND SHALL BE SPACED 12" (30cm) ON CENTER MAXIMUM.
5. HPX FASTENERS AND POLYMER SEAM PLATES ARE REQUIRED OVER STEEL DECKS.
6. DECK FLANGES OF THE QUICK-APPLIED PIPE SEAL SHALL NOT BE OVERLAPPED, CUT OR APPLIED OVER ANY ANGLE CHANGE.

MAXIMUM WARRANTY: 20 YEARS

VERSICO ROOFING SYSTEMS
© 2024 VERSICO

QUICK-APPLIED PIPE SEAL

REINFORCED EPDM-UNLESS NOTED OTHERWISE
APPROVED SUBSTRATE
0 SEE NOTE(S)

MECHANICALLY ATTACHED EPDM

VGMA-8.1

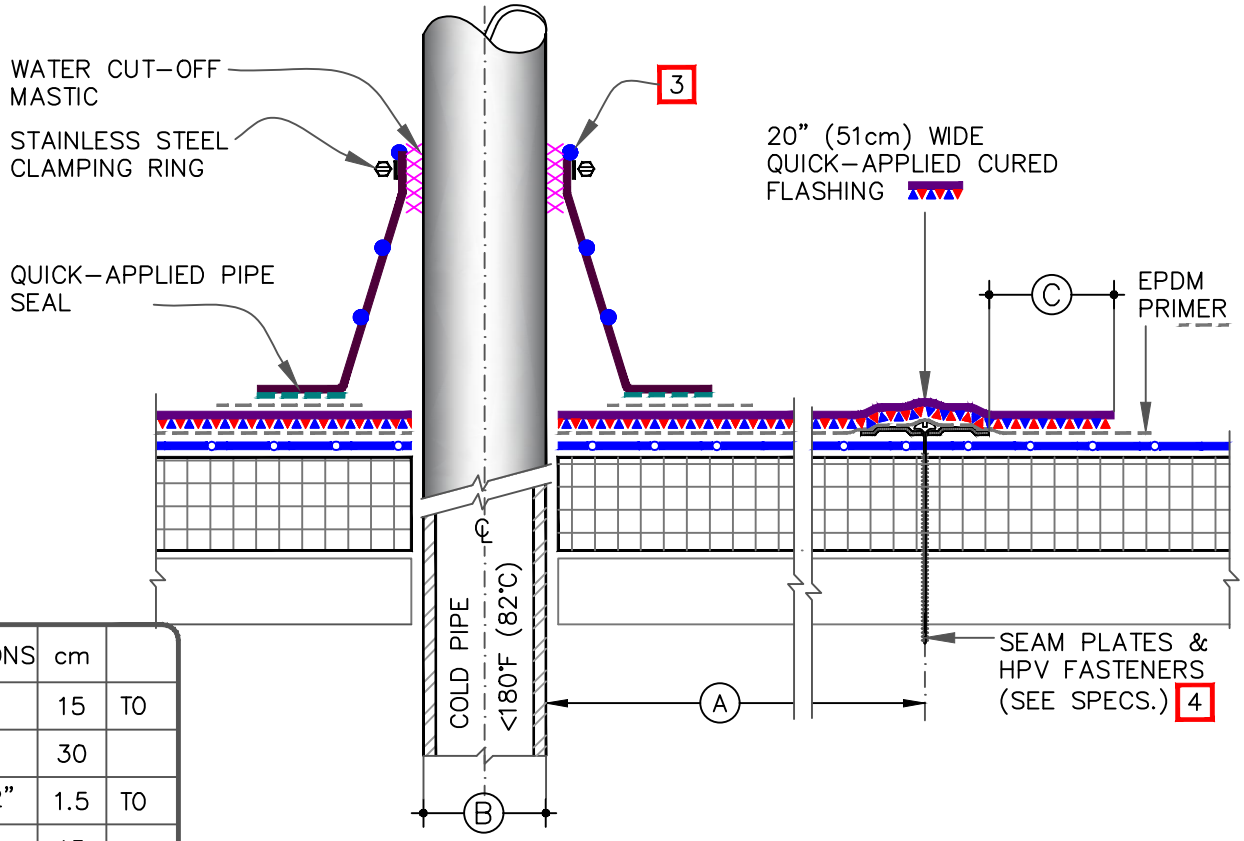

DIMENSIONS		cm	
A	6"	15	TO
	12"	30	
B	1/2"	1.5	TO
	6"	15	
C	2"	5	

NOTES:

1. REMOVE ALL LEAD AND OTHER FLASHING BEFORE INSTALLING PIPE SEAL.
2. TEMPERATURE OF PIPE MUST NOT EXCEED 180°F (82°C).
3. PRE-MOLDED PIPE SEAL MUST HAVE RIB INTACT AT THE TOP EDGE REGARDLESS OF PIPE DIAMETER.
4. INSTALL A MIN. OF 4 FASTENERS FOR PIPES WITH OUTSIDE DIAMETER <6" (15cm). SEE DETAIL VGMA-8.2 WITH OPTION FOR WIDER PIPES.
5. DECK FLANGES OF THE QUICK-APPLIED PIPE SEAL SHALL NOT BE OVERLAPPED, CUT OR APPLIED OVER ANY ANGLE CHANGE.

MAXIMUM WARRANTY: 30 YEARS

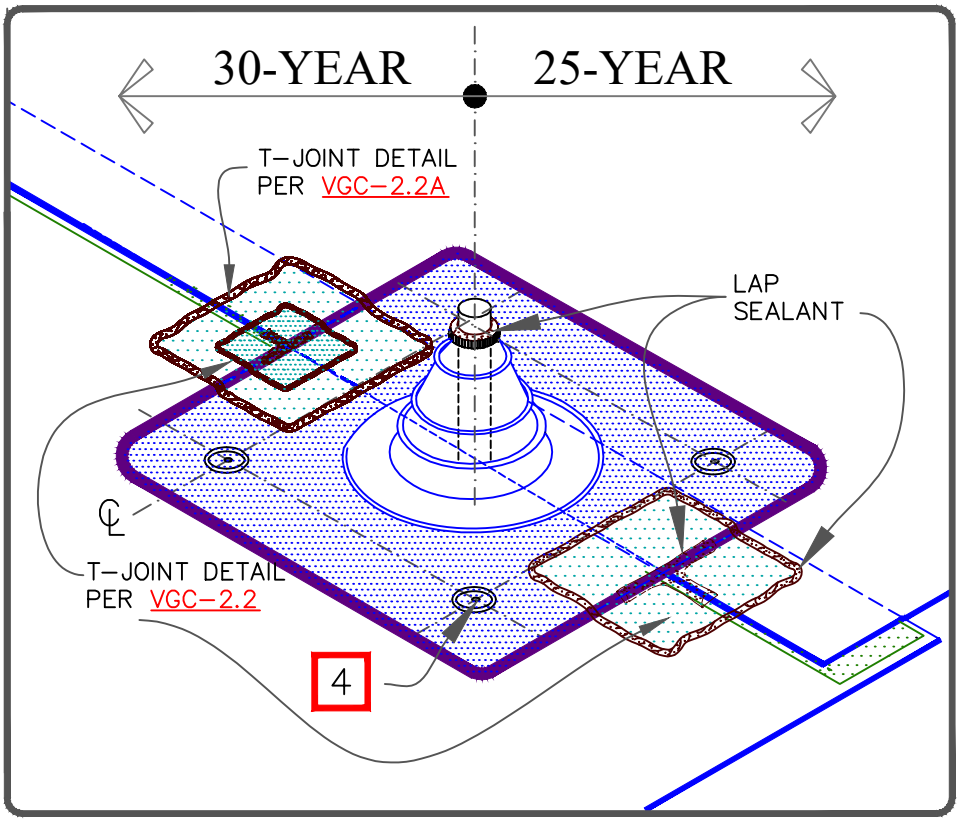

VERSICO ROOFING SYSTEMS
© 2024 VERSICO

QUICK-APPLIED PIPE SEAL WITH 20 INCH QUICK-APPLIED CURED FLASHING

→ EPDM MEMBRANE
→ APPROVED SUBSTRATE
0 → SEE NOTE(S)

VersiGard MECHANICALLY ATTACHED (EPDM)

VGMA-8.1A

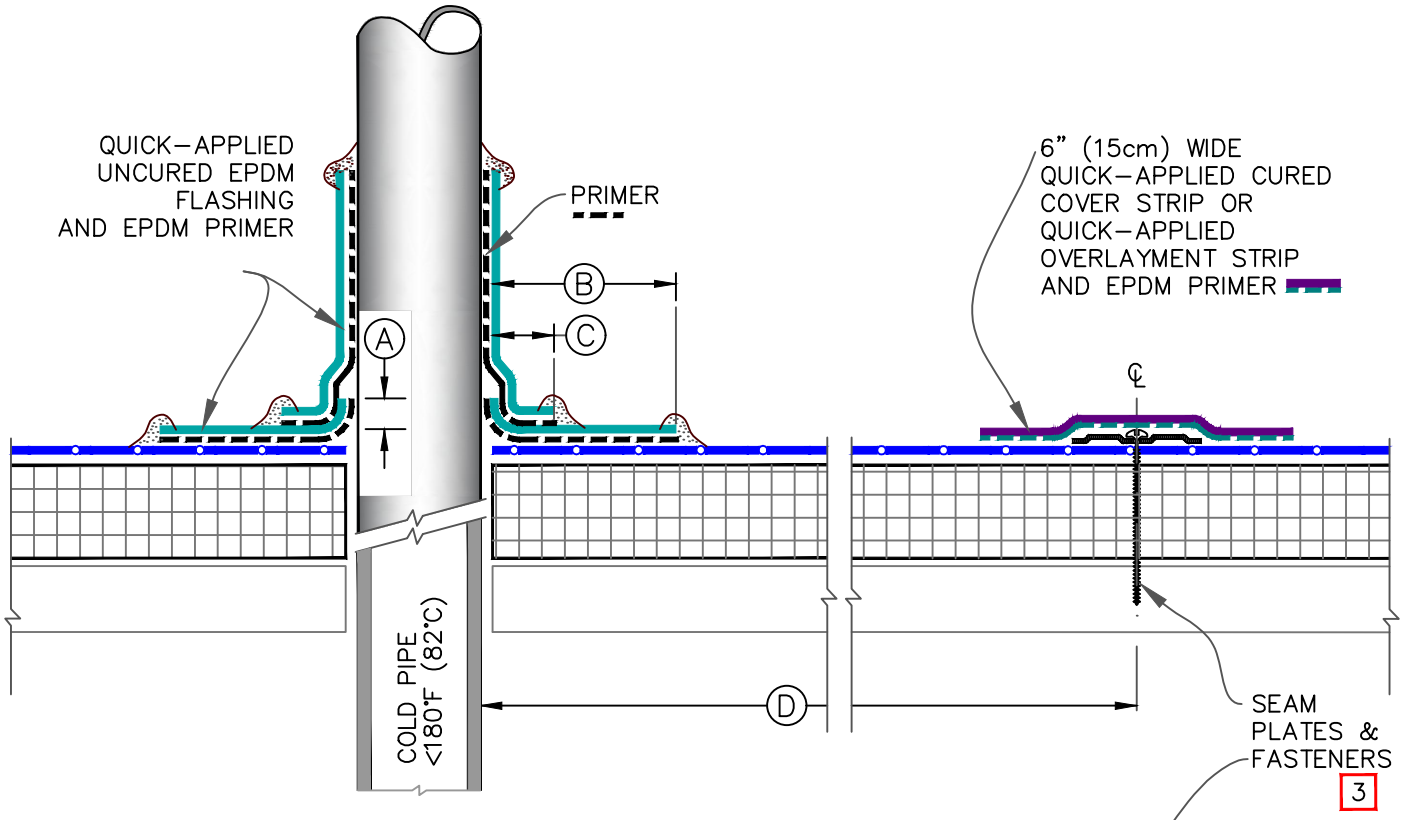

NOTES:

1. REMOVE ALL LEAD AND OTHER FLASHING BEFORE INSTALLING QUICK–APPLIED UNCURED EPDM FLASHING.
2. TEMPERATURE OF PIPE MUST NOT EXCEED 180°F (82°C).
3. HPX FASTENERS AND POLYMER SEAM PLATES ARE REQUIRED OVER STEEL DECKS.
4. FOR STRUCTURAL STEEL TUBING GREATER THAN 12" ACROSS USE VGC–5 DETAILS.

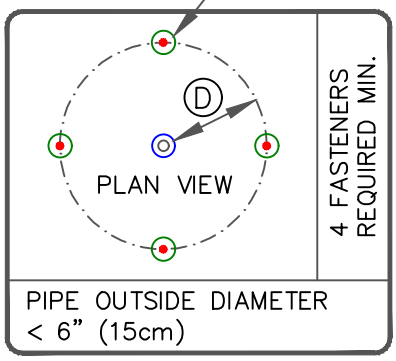

DIMENSIONS		cm	
A	1/2"	1.5	
B	3"	7.5	
C	1"	2.5	
D	6"	15	TO
	12"	30	
E	12"	30	MAX.

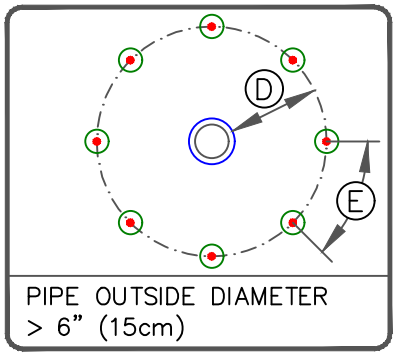

MAXIMUM WARRANTY: 20 YEARS

VERSICO ROOFING SYSTEMS
© 2024 VERSICO

FIELD FABRICATED PIPE WRAP

REINFORCED EPDM– UNLESS NOTED OTHERWISE
APPROVED SUBSTRATE
0 SEE NOTE(S)

MECHANICALLY ATTACHED EPDM

VGMA–8.2

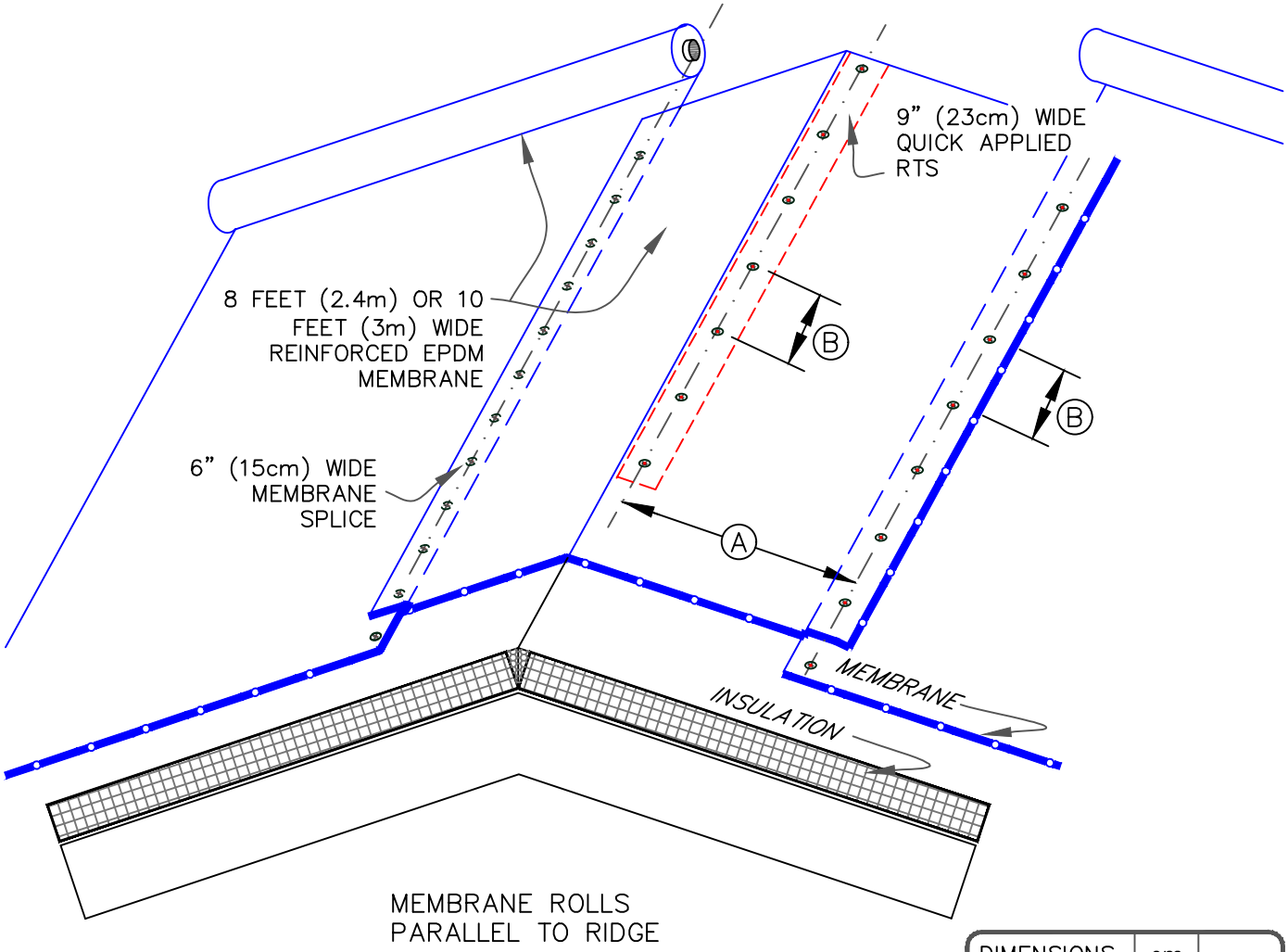

DIMENSIONS		cm	
A	3'–6"	110	MIN.
	4'–6"	140	MAX.
B	12"O.C.	30	MAX.

NOTES:

1. RIDGE MEMBRANE ATTACHMENT IS ONLY REQUIRED WHEN ROOF SLOPE EXCEEDS 3" TO THE HORIZONTAL FOOT (7.5cm/30cm).
2. REINFORCED EPDM MEMBRANE SHALL BE INSTALLED PARALLEL WITH RIDGE LINE (WITH MEMBRANE CENTERED OVER THE RIDGE LINE) AS SHOWN.
3. FOR PROPER MEMBRANE ATTACHMENT AND SPLICING, REFER TO APPLICABLE VGMA–2 DETAIL.
4. REFER TO VERSICO SPECIFICATIONS FOR REQUIRED NUMBER OF PERIMETER SHEETS, SHEET WIDTH AND MEMBRANE FASTENING DENSITY.
5. HPX FASTENERS AND POLYMER SEAM PLATES ARE REQUIRED OVER STEEL DECKS.
6. AS AN OPTION, 9" (23cm) WIDE QUICK APPLIED RTS MAY BE USED BENEATH EPDM FIELD SHEETS FOR PERIMETER SECUREMENT.

MAXIMUM WARRANTY: 30 YEARS

VERSICO ROOFING SYSTEMS
© 2024 VERSICO

RIDGE MEMBRANE ATTACHMENT

REINFORCED EPDM– UNLESS NOTED OTHERWISE
APPROVED SUBSTRATE
0 SEE NOTE(S)

MECHANICALLY ATTACHED EPDM

VGMA–22

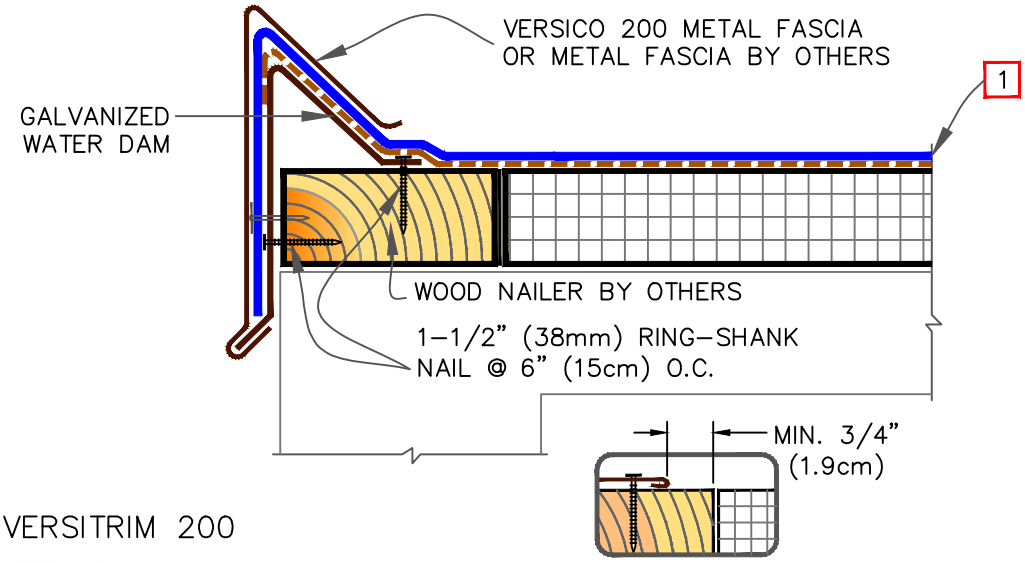

VERSITRIM 200

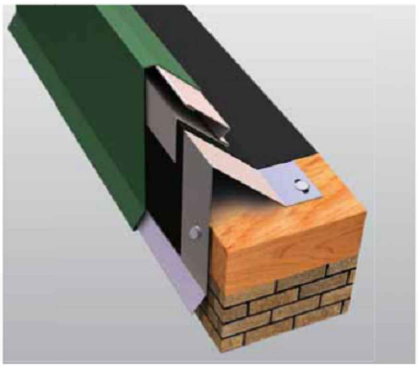

NOTE:

1. MAXIMUM MEMBRANE THICKNESS GOING OVER THE WATER DAM IS 60-MIL. FOR THICKER MEMBRANES, RUN FIELD SHEET UNDER THE WATER DAM AND STRIP-IN WITH MAXIMUM 60-MIL MEMBRANE.

2. USE VGMA-1A FOR MECHANICALLY FASTENED SYSTEMS AND VGB-1.1 FOR BALLASTED SYSTEMS.

AT CORNERS, 6" (15cm) WIDE QUICK APPLIED RTS MUST BE INSTALLED 12" (30cm) MAXIMUM FROM THE BASE OF THE WATER DAM AND EXTEND 36" (90cm) MINIMUM IN EACH DIRECTION.

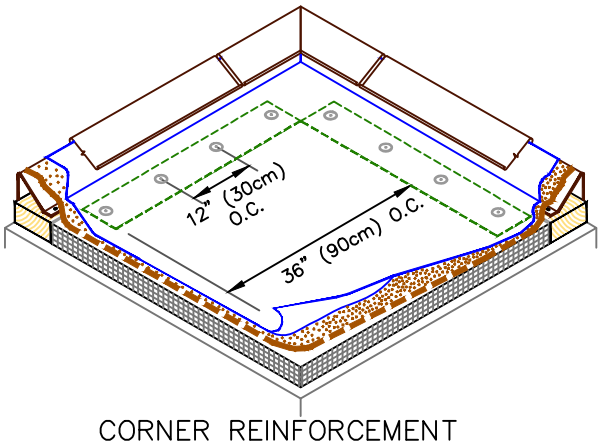

CORNER REINFORCEMENT

QUICK-APPLIED
T-JOINT COVER AND
EPDM PRIMER

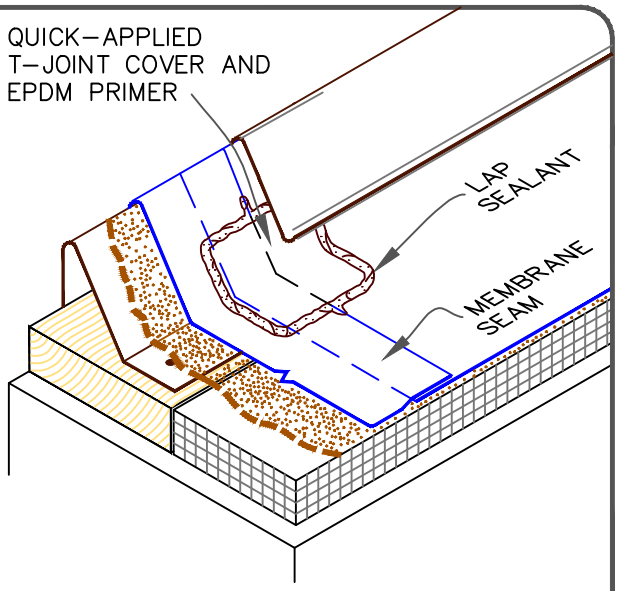

MEMBRANE SEAM AT EDGE

MAXIMUM WARRANTY: 20 YEARS

VERSICO ROOFING SYSTEMS
© 2024 VERSICO

VERSITRIM 200

EPDM MEMBRANE
APPROVED SUBSTRATE
0 SEE NOTE(S)

THERMOSET ROOFING SYSTEM

VGC-1.1

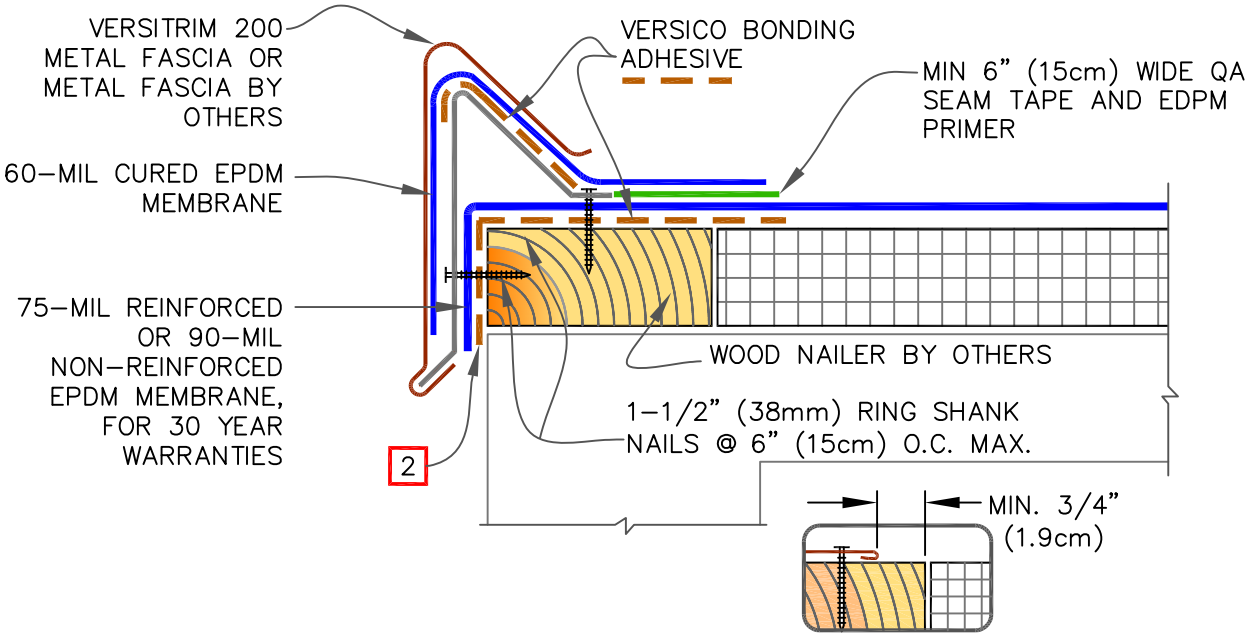

NOTES:

1. FIELD SPLICES AT THE ANGLE CHANGE SHALL BE OVERLAID WITH EPDM PRIMER AND TWO LAYERS OF QUICK-APPLIED UNCURED FLASHING. PER DETAIL VGC-2.3.

2. WHEN AND AIR/VAPOR BARRIER IS NOT SPECIFIED, THE ROOF MEMBRANE SHALL BE ADHERED OVER PERIMETER WOOD NAILER ALONG EDGES TO PREVENT AIR INFILTRATION ALONG EDGING, REGARDLESS OF ASSEMBLY TYPE (BALLASTED, ADHERED AND MECHANICALLY FASTENED).

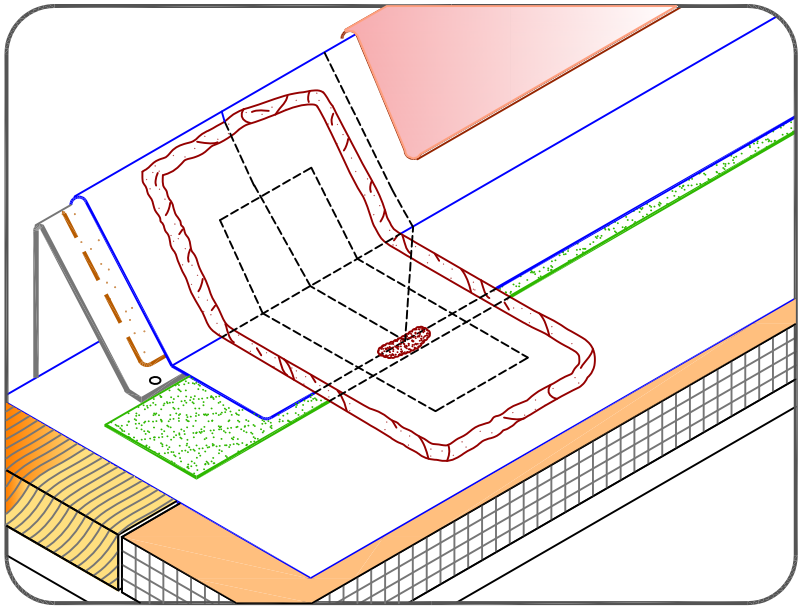

MAXIMUM WARRANTY: 30 YEARS

VERSICO ROOFING SYSTEMS

© 2024 VERSICO

VERSITRIM 200 (30 YEAR WARRANTIES)

→ EPDM MEMBRANE
→ APPROVED SUBSTRATE
0 → SEE NOTE(S)

VersiGard COMMON DETAILS (EPDM)

VGC-1.1A

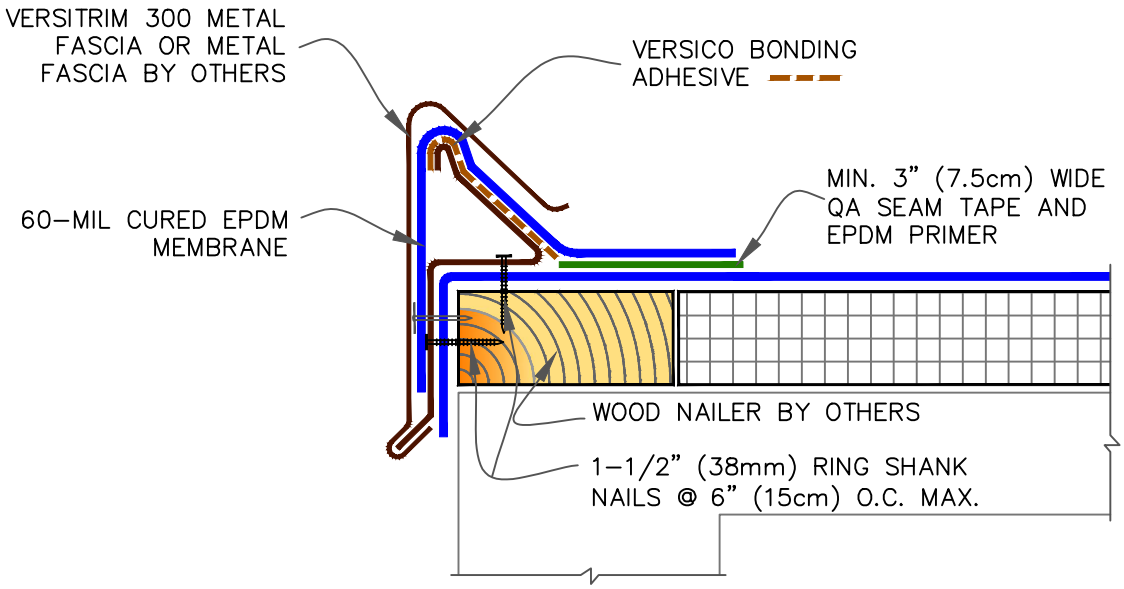

NOTE:

1. 6" (15cm) WIDE QUICK-APPLIED UNCURED EPDM FLASHING, IN CONJUNCTION WITH EPDM PRIMER, MUST BE CENTERED OVER FIELD SPLICES AT THE ANGLE CHANGE.

VERSITRIM 300

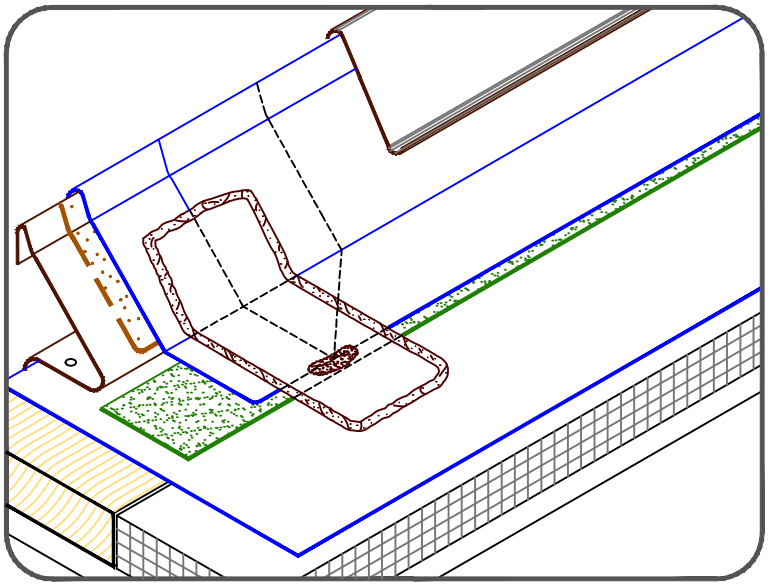

MAXIMUM WARRANTY: 20 YEARS

VERSICO ROOFING SYSTEMS
© 2024 VERSICO

VERSITRIM 300

→ EPDM MEMBRANE
→ APPROVED SUBSTRATE
0 → SEE NOTE(S)

THERMOSET ROOFING SYSTEM

VGC-1.2

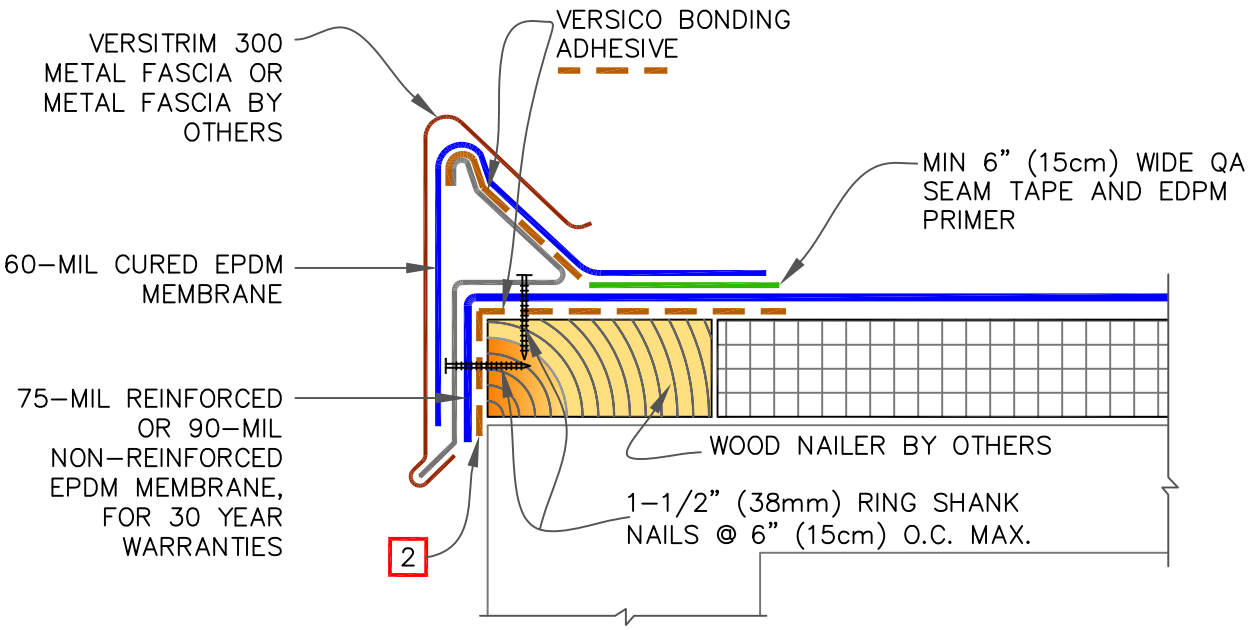

NOTES:

1. FIELD SPLICES AT THE ANGLE CHANGE SHALL BE OVERLAID WITH EPDM PRIMER AND 2 LAYERS OF QUICK-APPLIED UNCURED FLASHING PER DETAIL VGC-2.3.

2. WHEN AIR/VAPOR BARRIER IS NOT SPECIFIED, THE ROOF MEMBRANE SHALL BE ADHERED OVER PERIMETER WOOD NAILER ALONG EDGES TO PREVENT AIR INFILTRATION ALONG EDGING, REGARDLESS OF ASSEMBLY TYPE (BALLASTED, ADHERED AND MECHANICALLY FASTENED).

VERSITRIM 300

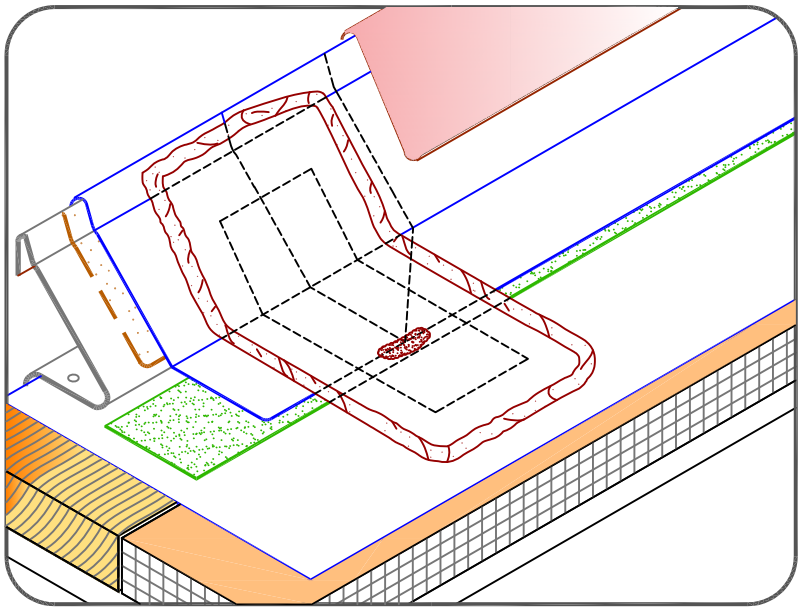

MAXIMUM WARRANTY: 30 YEARS

VERSICO ROOFING SYSTEMS
© 2024 VERSICO

VERSITRIM 300 (30 YEAR WARRANTIES)

→ EPDM MEMBRANE
→ APPROVED SUBSTRATE
0 → SEE NOTE(S)

VersiGard COMMON DETAILS (EPDM)

VGC-1.2A

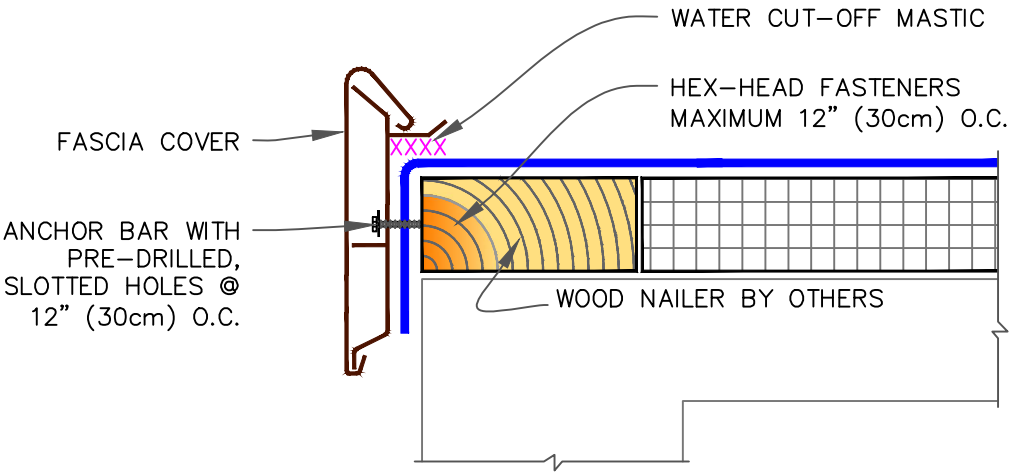

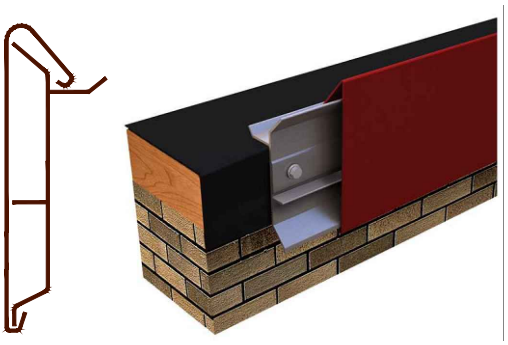

VERSITRIM 2000

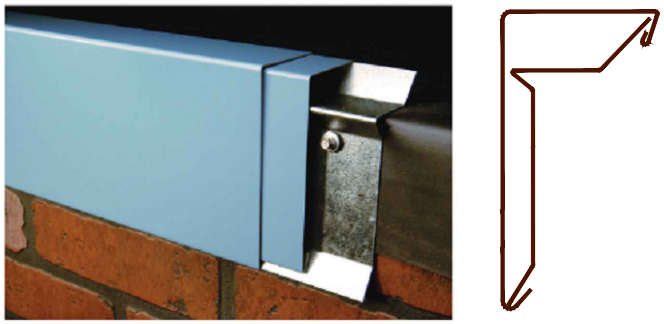

VERSITRIM 3000

NOTES:

1. IF INCIDENTAL/TEMPORARY PONDED WATER IS EXPECTED, THE VERSITRIM MUST BE ELEVATED AND SCUPPERS PROVIDED FOR DRAINAGE.

2. ENSURE ROOF SLOPES AWAY FROM VERSITRIM.

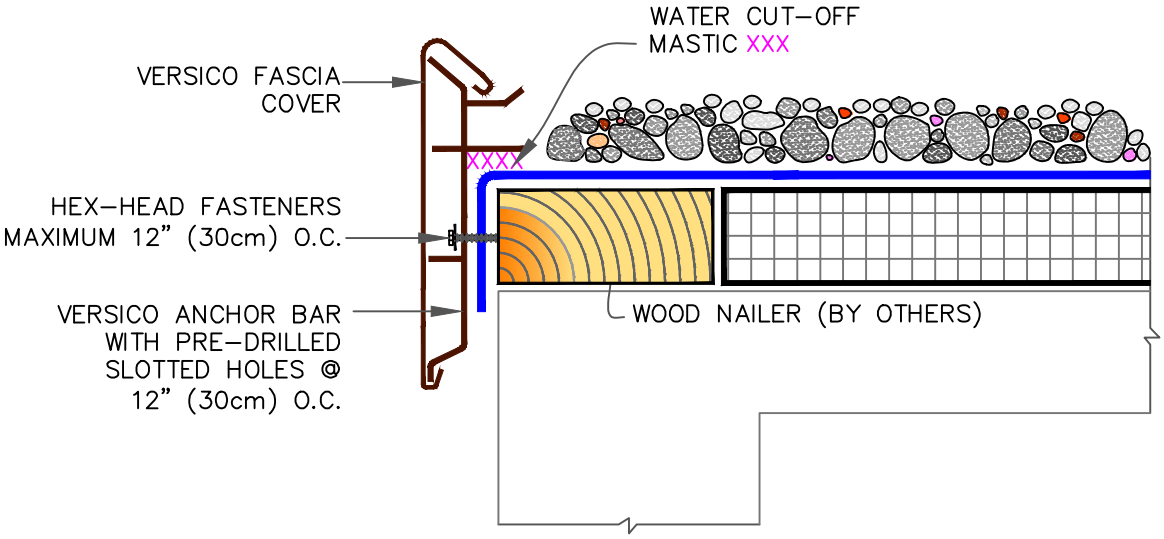

MAXIMUM WARRANTY: 30 YEARS

VERSICO ROOFING SYSTEMS
© 2024 VERSICO

VERSITIRM 2000 & 3000

→ EPDM MEMBRANE
→ APPROVED SUBSTRATE
0 → SEE NOTE(S)

THERMOSET ROOFING SYSTEM

VGC–1.3

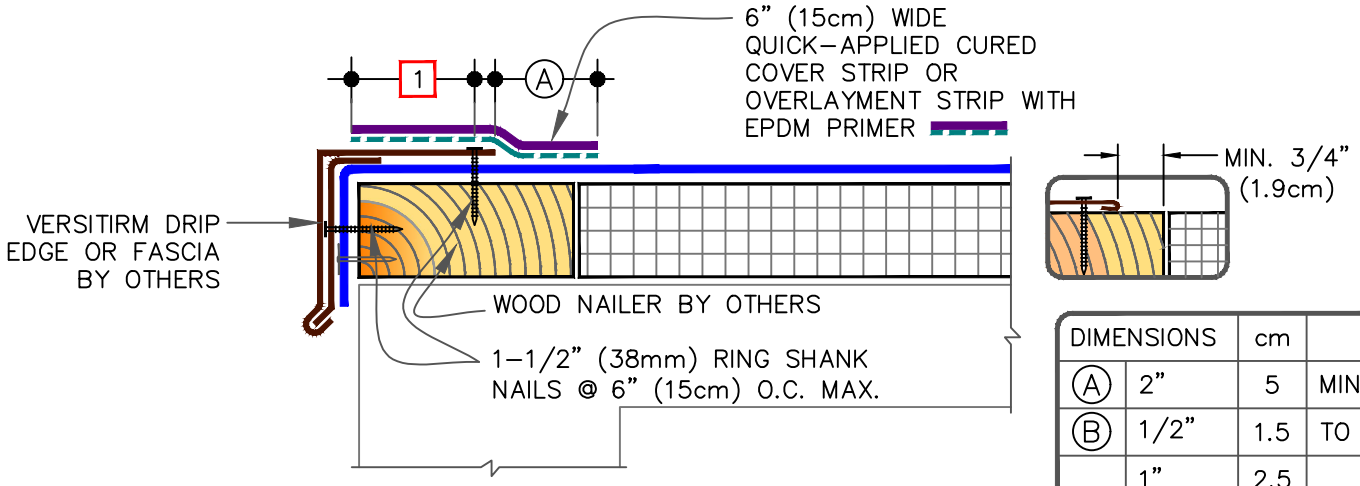

DIMENSIONS		cm	
A	2"	5	MIN.
B	1/2"	1.5	TO
	1"	2.5	

NOTES:

1. DECK FLANGE MUST BE TOTALLY COVERED WITH MINIMUM 2" (5cm) COVERAGE PAST NAIL HEADS. TO REMOVE FINISHING OILS, SCRUB METAL FLANGE WITH WEATHERED MEMBRANE CLEANER; ALLOW TO DRY PRIOR TO APPLYING PRIMER.
2. LAP SEALANT MUST BE APPLIED AT FLASHING OVERLAPS AND INTERSECTIONS WITH JOINTS IN METAL EDGING.
3. T-JOINT COVER NOT NEEDED WHEN USING QA OVERLAYMENT STRIP ON MEMBRANE LESS THAN 90-MIL.
4. WHEN USING 90-MIL MEMBRANE INSTALL A 12" (30cm) T-JOINT COVER OVER THE 6" (15cm) T-JOINT COVER PER VGC-2.2A
5. DETAIL NOT FOR USE WITH DESIGN "B" (BALLASTED STONE ASSEMBLY).

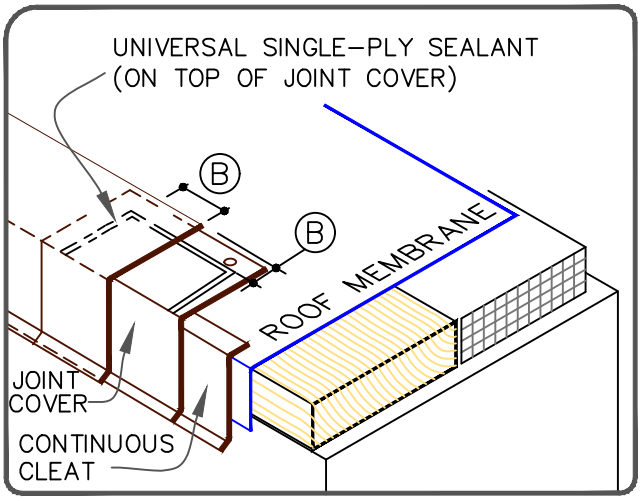

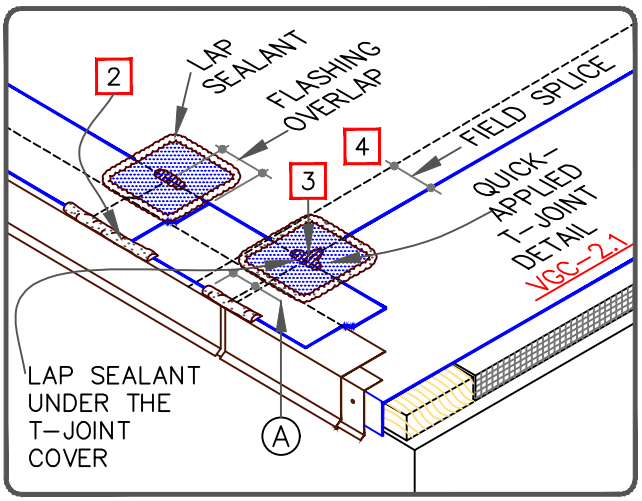

MAXIMUM WARRANTY: 20 YEARS

VERSICO ROOFING SYSTEMS
© 2024 VERSICO

VERSITRIM DRIP EDGE FASCIA

→ EPDM MEMBRANE
→ APPROVED SUBSTRATE
0 → SEE NOTE(S)

THERMOSET ROOFING SYSTEM

VGC-1.4

OPTION 1

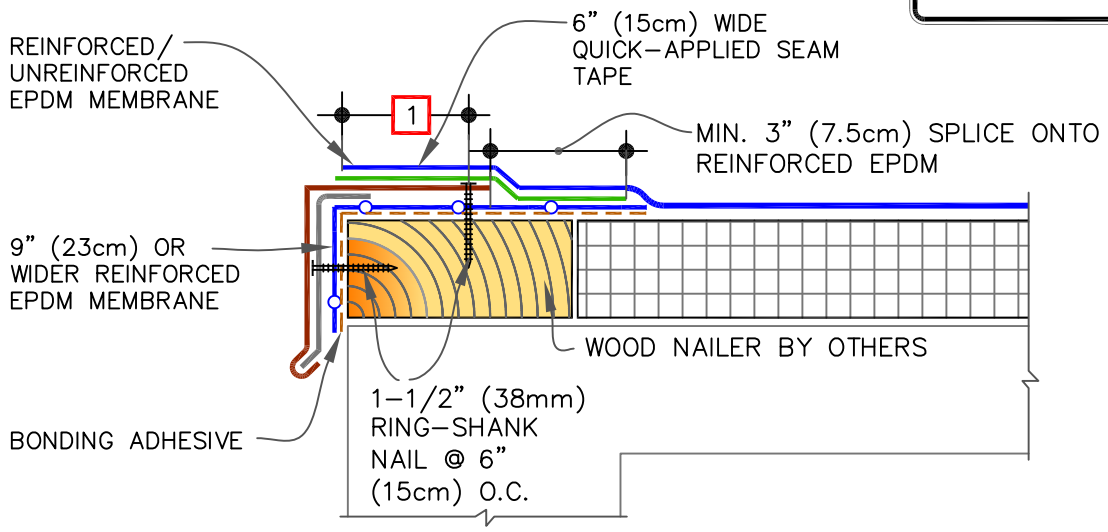

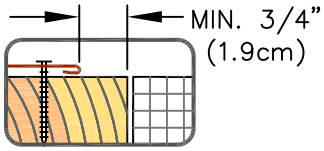

OPTION 2

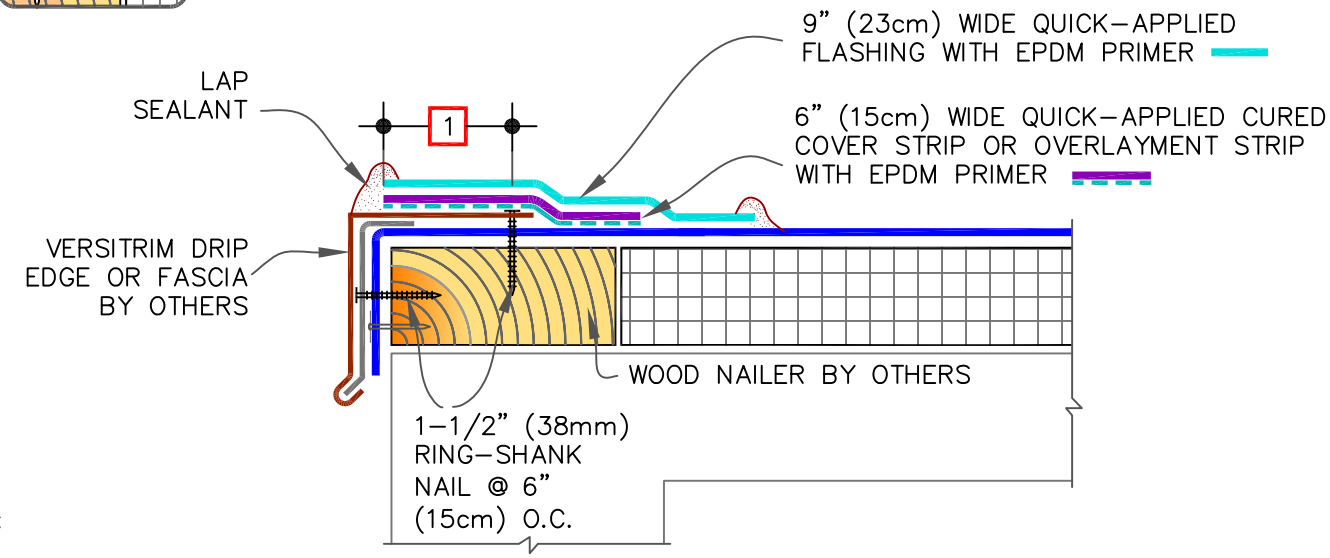

NOTES:

1. DECK FLANGE MUST BE TOTALLY COVERED WITH MINIMUM 2" (5cm) COVERAGE PAST NAIL HEADS. TO REMOVE FINISHING OILS, SCRUB METAL FLANGE WITH WEATHERED MEMBRANE CLEANER; ALLOW TO DRY PRIOR TO APPLYING PRIMER.

2. LAP SEALANT MUST BE APPLIED AT FLASHING OVERLAPS AND INTERSECTIONS WITH JOINTS IN METAL EDGING.

3. ALL SPLICE INTERSECTIONS MUST BE OVERLAID WITH QUICK-APPLIED T-JOINT COVERS AND SEALED WITH CONTINUOUS LAP SEALANT. PRIOR TO DOING SO, APPLY LAP SEALANT ALONG THE LEADING EDGE OF THE MEMBRANE SPLICES (UNDER THE 6"X 6" (15cm X 15cm) T-JOINT COVER) COVERING THE EXPOSED SPLICE TAPE 1/2" (1.5cm) IN ALL DIRECTIONS FROM THE SPLICE INTERSECTION.

4. DETAIL NOT FOR USE WITH DESIGN "B" (BALLASTED STONE ASSEMBLY).

MAXIMUM WARRANTY: 30 YEARS

VERSICO ROOFING SYSTEMS
© 2024 VERSICO

VERSITRIM DRIP EDGE FASCIA (30 YEAR WARRANTIES)

→ EPDM MEMBRANE
→ APPROVED SUBSTRATE
0 → SEE NOTE(S)

VersiGard COMMON DETAILS (EPDM)

VGC-1.4A

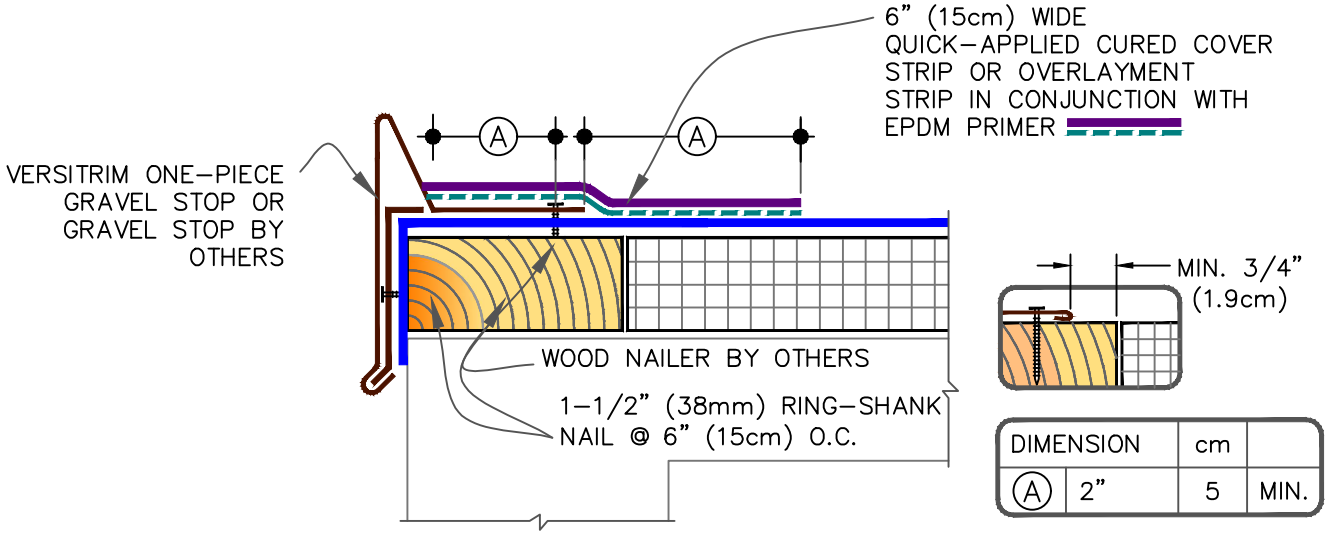

DIMENSION		cm	
A	2"	5	MIN.

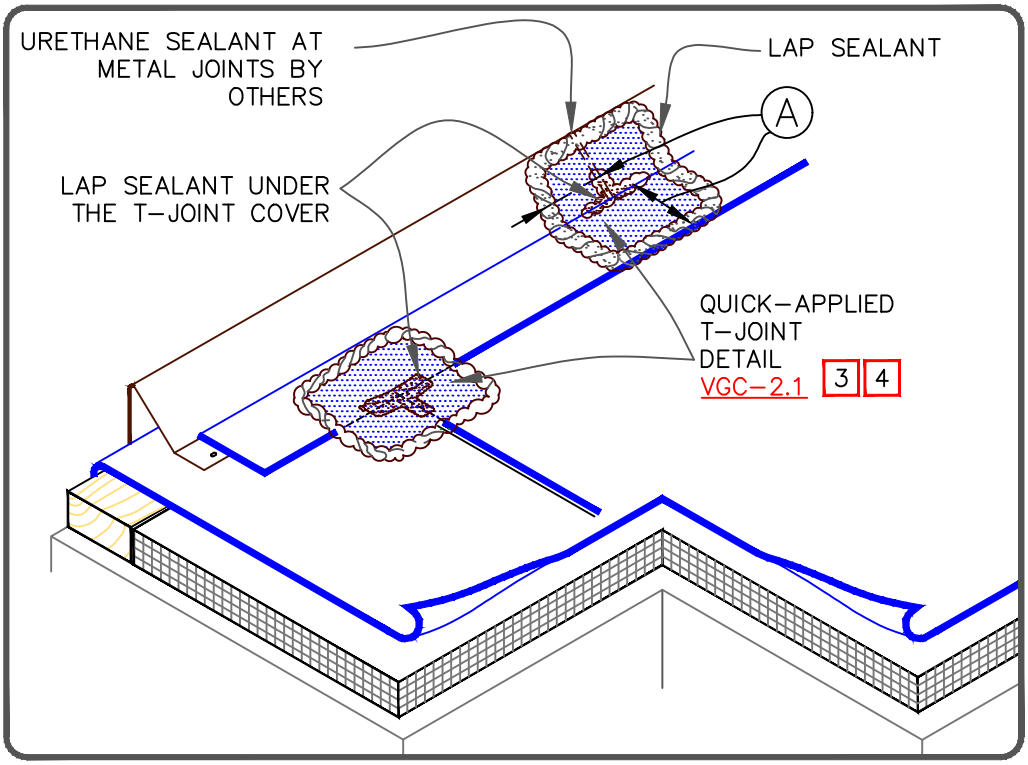

NOTES:

1. TO REMOVE FINISHING OILS, SCRUB METAL FLANGE WITH WEATHERED MEMBRANE CLEANER; ALLOW TO DRY PRIOR TO APPLYING PRIMER.
2. LAP SEALANT MUST BE APPLIED AT FLASHING OVERLAPS AND INTERSECTIONS WITH JOINTS IN METAL EDGING.
3. T-JOINT COVER AT SPLICE INTERSECTION NOT NEEDED WHEN USING PS OVERLAYMENT STRIP ON MEMBRANE LESS THAN 90-MIL.
4. WHEN USING 90-MIL MEMBRANE INSTALL A 12" (30cm) T-JOINT COVER OVER THE 6" (15cm) T-JOINT COVER PER VGC-2.2A

MAXIMUM WARRANTY: 20 YEARS

VERSICO ROOFING SYSTEMS
© 2024 VERSICO

VERSITRIM ONE-PIECE GRAVEL STOP

→ EPDM MEMBRANE
→ APPROVED SUBSTRATE
0 → SEE NOTE(S)

THERMOSET ROOFING SYSTEM

VGC-1.5

NON–BALLASTED SYSTEMS

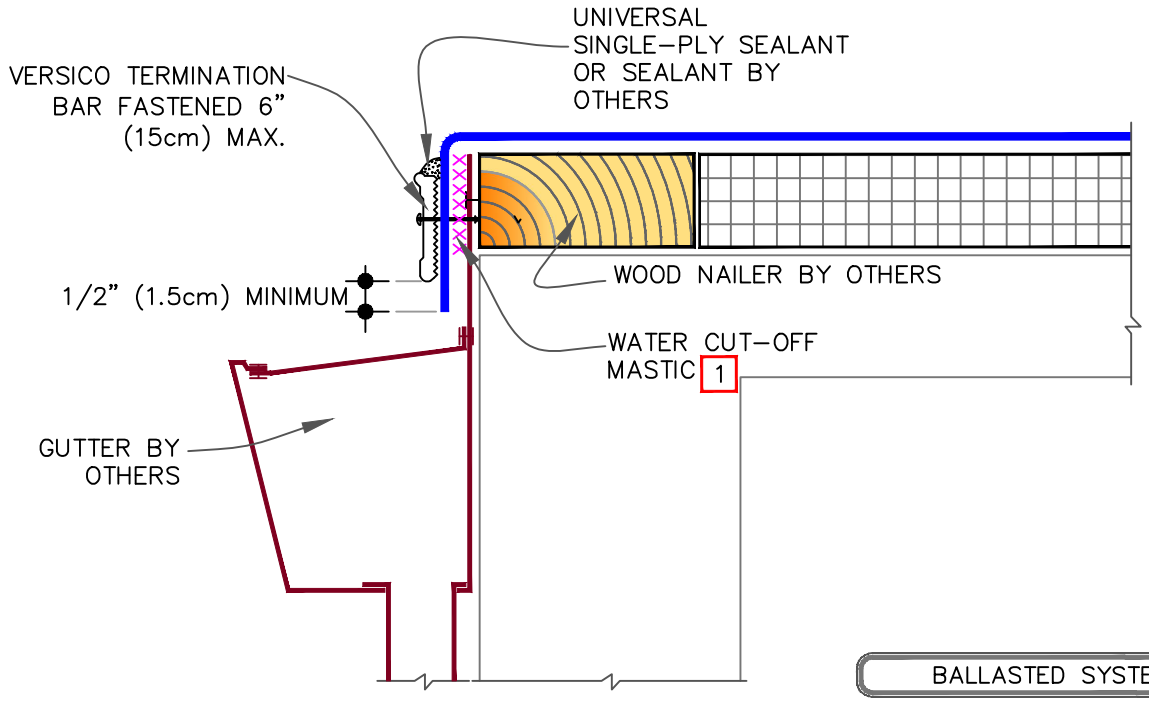

BALLASTED SYSTEMS

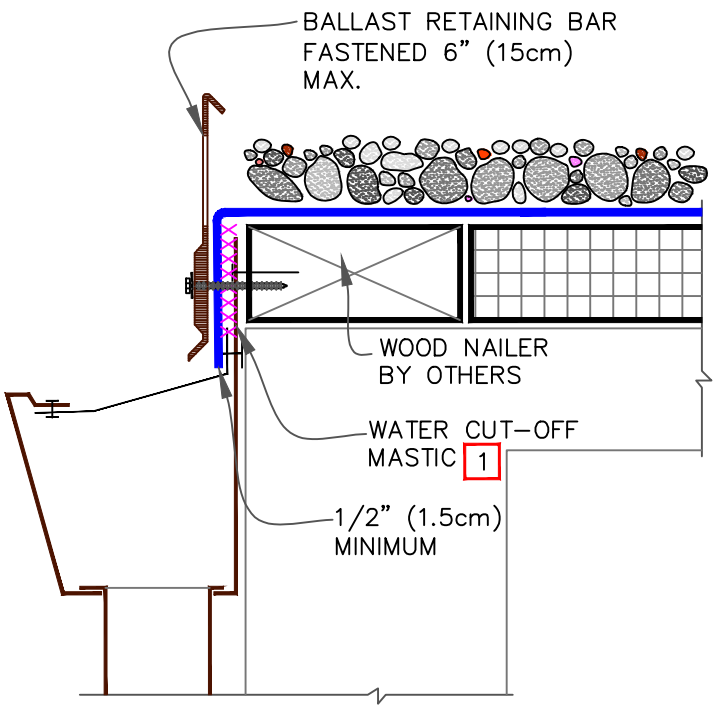

NOTES:

1. FASTENING OF METAL TERMINATION OR BALLAST RETAINING BAR MUST PROVIDE CONSTANT COMPRESSION ON WATER CUT–OFF MASTIC.
2. BALLAST RETAINING BAR MUST EXTEND ABOVE GRAVEL SURFACE SUFFICIENTLY TO RETAIN GRAVEL AND PREVENT GRAVEL MIGRATION.
3. SLOTS IN BALLAST RETAINING BAR MUST BE FLUSH OR SLIGHTLY BELOW MEMBRANE LEVEL.

MAXIMUM WARRANTY: 30 YEARS

VERSICO ROOFING SYSTEMS

© 2024 VERSICO

METAL BAR EDGE TERMINATION

→ EPDM MEMBRANE

→ APPROVED SUBSTRATE

0 → SEE NOTE(S)

THERMOSET ROOFING SYSTEM

VGC–1.6

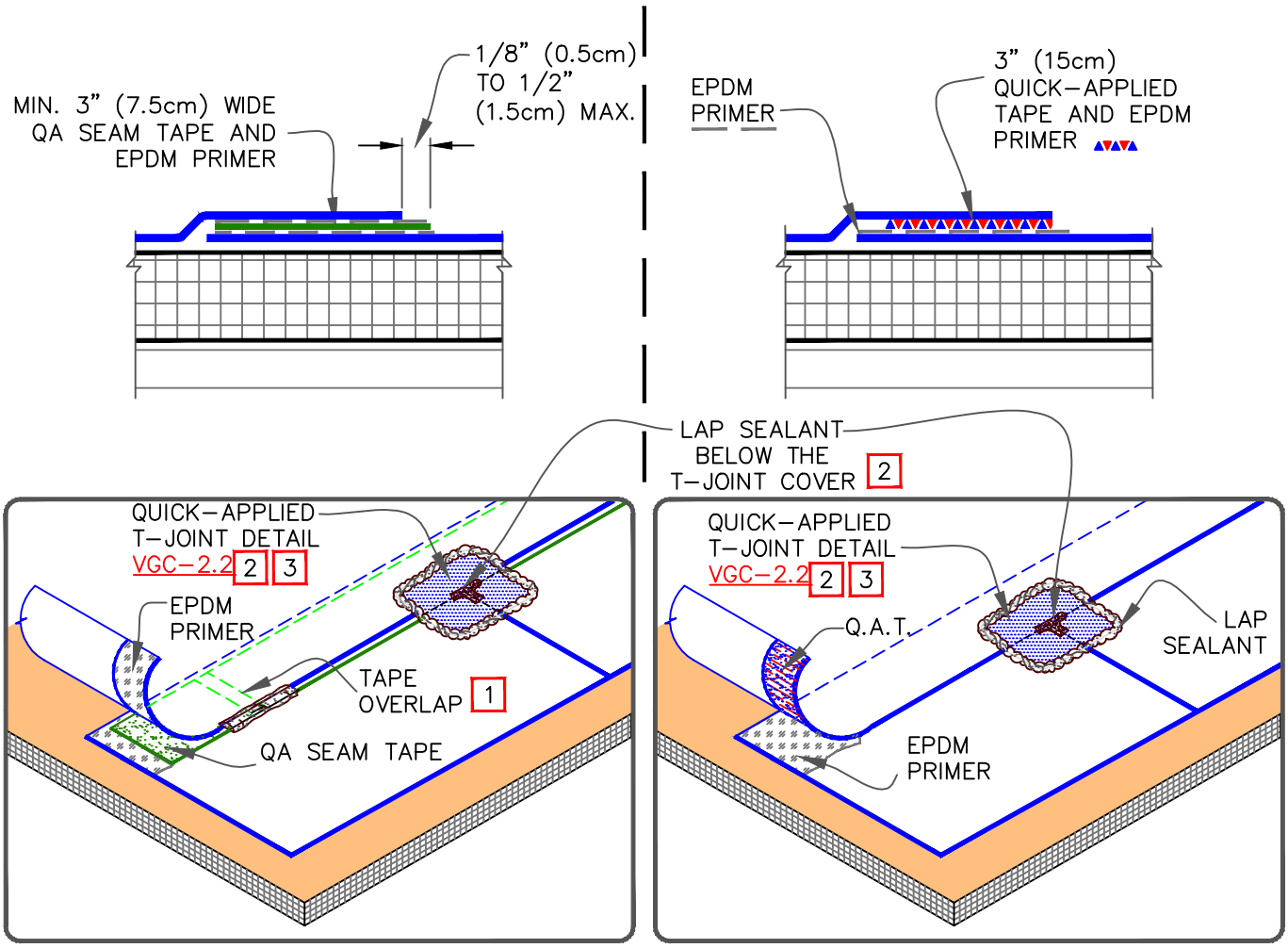

NOTES:

1. OVERLAP THE ENDS OF THE FIELD APPLIED QA SEAM TAPE A MINIMUM OF 1" (2.5cm). APPLY LAP SEALANT AT TAPE OVERLAPS 2" (5cm) IN EACH DIRECTION AS SHOWN.
2. APPLY LAP SEALANT ALONG THE EXPOSED EDGE OF THE MEMBRANE SPLICE COVERING THE EXPOSED SPLICE TAPE 1/2" (1.5cm) IN EACH DIRECTION FROM THE SPLICE INTERSECTION AND OVERLAY WITH A 6" (15cm) T-JOINT COVER.
3. WHEN USING 90-MIL MEMBRANE, INSTALL A 12" (30cm) T-JOINT COVER CENTERED OVER THE FIRST T-JOINT COVER PER DETAIL VGC-2.2A.
4. LAP SEALANT IS REQUIRED ON CUT EDGES OF REINFORCED EPDM MEMBRANE.
5. REFER TO DETAIL VGMA-2.1 FOR MECHANICALLY FASTENED SPLICES.

MAXIMUM WARRANTY: 20 YEARS

VERSICO ROOFING SYSTEMS

© 2024 VERSICO

EPDM MEMBRANE SPLICE

→ EPDM MEMBRANE
→ APPROVED SUBSTRATE
0 → SEE NOTE(S)

THERMOSET ROOFING SYSTEM

VGC-2.1

OPTION 1: NARROW SEAM WITH OVERLAYMENT

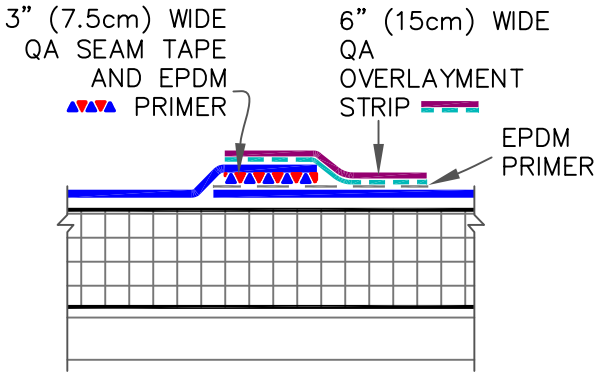

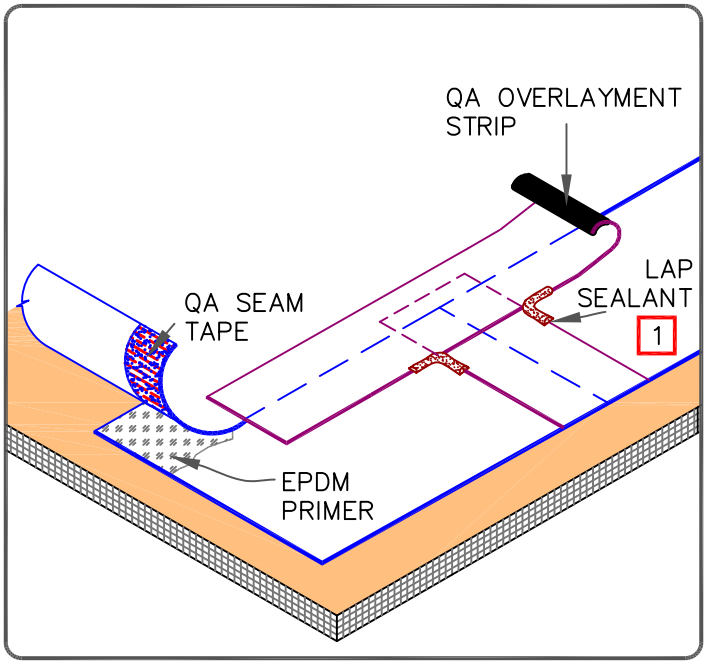

NOTES:

1. APPLY LAP SEALANT AT ALL INTERSECTIONS BETWEEN QUICK-APPLIED OVERLAYMENT STRIP.
2. REFER TO DETAIL VGMA-2.1A FOR MECHANICALLY-FASTENED SPLICES.

OPTION 2: WIDER SEAM

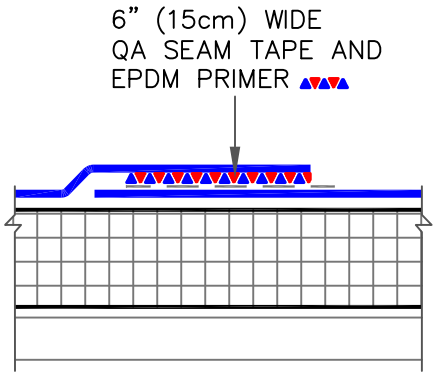

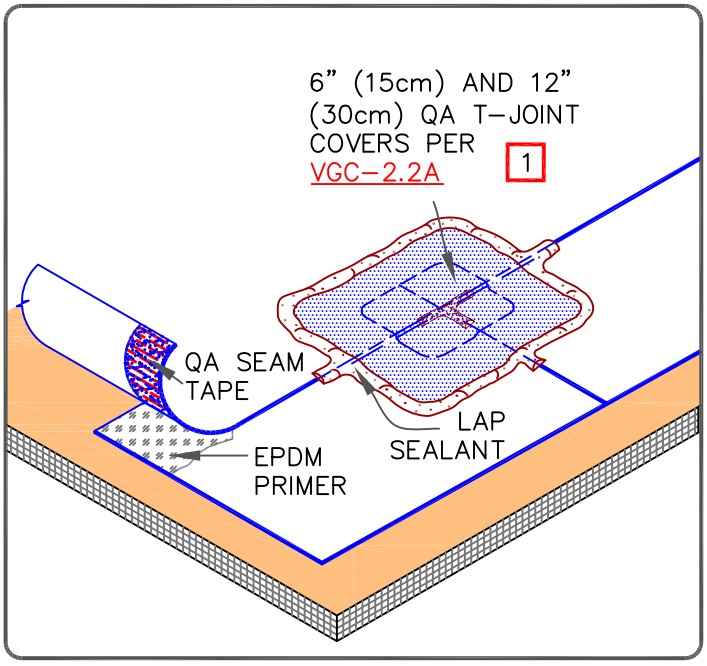

QA (QUICK-APPLIED)

NOTE:

1. APPLY LAP SEALANT ALONG THE EXPOSED EDGE OF THE MEMBRANE SPLICE COVERING THE EXPOSED SPLICE TAPE 1/2" (1.5cm) IN EACH DIRECTION FROM THE SPLICE INTERSECTION AND OVERLAY WITH A 6" (15cm) T-JOINT COVER. INSTALL A 12" (30cm) T-JOINT COVER CENTERED OVER THE FIRST T-JOINT COVER PER DETAIL VGC-2.2A.

MAXIMUM WARRANTY: 30 YEARS

VERSICO ROOFING SYSTEMS

© 2024 VERSICO

EPDM MEMBRANE SPLICE (30 YEAR WARRANTIES)

→ EPDM MEMBRANE
→ APPROVED SUBSTRATE
0 → SEE NOTE(S)

VersiGard COMMON DETAILS (EPDM)

VGC-2.1A

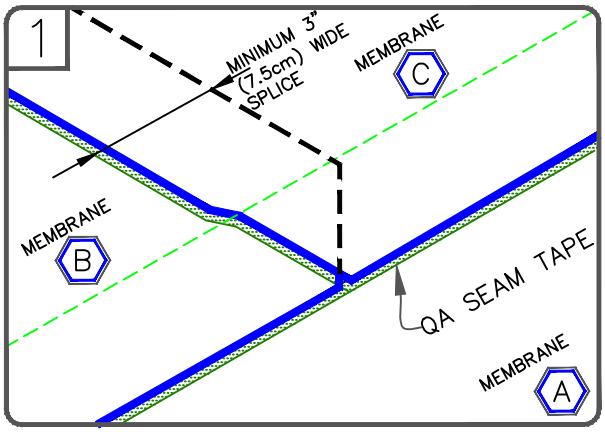

POSITION MEMBRANE TO ALLOW AN APPROXIMATE 4" (10cm) OVERLAP. MARK THE BOTTOM SHEET WITH AN INDELIBLE MARKER 1/2" (1.5cm) FROM THE EDGE OF THE TOP SHEET AS SHOWN. THE PRE-MARKED LINE ON THE MEMBRANE EDGE CAN ALSO BE USED AS A GUIDE.

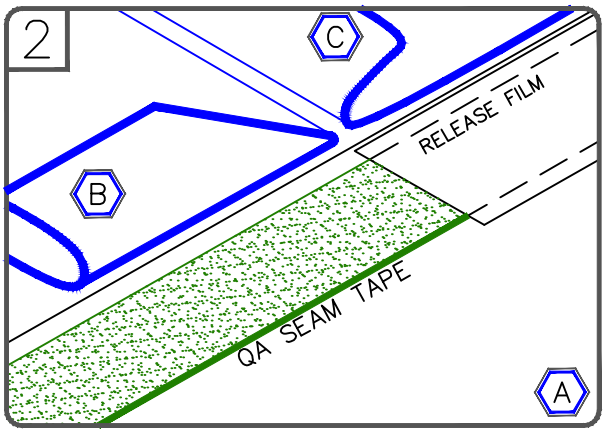

FOLD SHEETS BACK AS SHOWN. APPLY EPDM PRIMER TO THE SPLICE AREA ON BOTH SURFACES AND ALLOW TO FLASH-OFF. APPLY QA SEAM TAPE WITH RELEASE FILM ALIGNED WITH MARKED LINE.

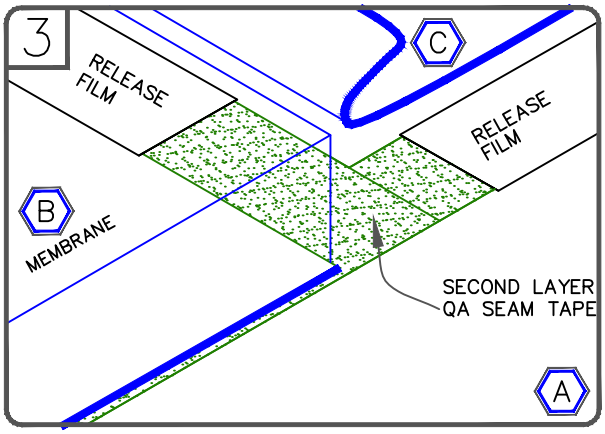

SPLICE SHEET B TO SHEET A AND APPLY SECOND PIECE OF QA SEAM TAPE BETWEEN SHEET B AND C. TRIM RELEASE FILM AS SHOWN.

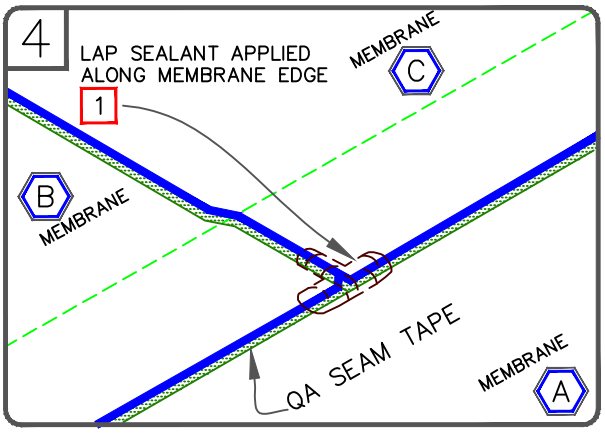

SPLICE SHEET C TO SHEET A AND B, PRESS TOP SHEET ONTO BOTTOM SHEET USING HAND PRESSURE TOWARDS THE OUTER EDGE OF THE SPLICE AND ROLL THE SPLICE AREA WITH A 2" (5cm) WIDE STEEL ROLLER.

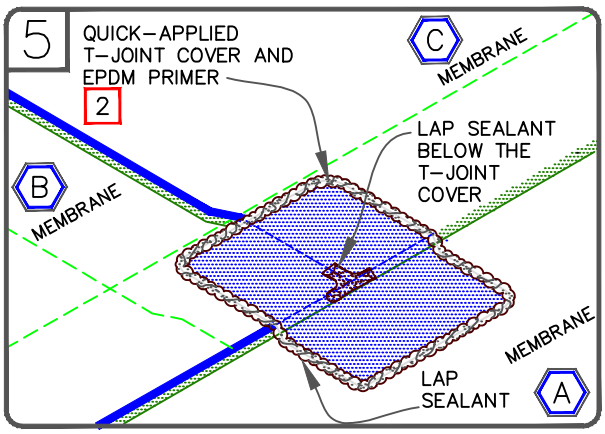

APPLY QUICK-APPLIED T-JOINT COVER OR 6" (15cm) WIDE SECTION OF QUICK-APPLIED UNCURED EPDM FLASHING CENTERED OVER THE INTERSECTING POINT OF THE LEADING EDGES OF THE FIELD SPLICE INTERSECTION AS SHOWN.

NOTES:

1. APPLY LAP SEALANT ALONG THE EDGE OF THE MEMBRANE SPLICE BELOW THE 6" (15cm) T-JOINT COVER, COVERING THE EXPOSED SPLICE TAPE 1/2" (1.5cm) IN EACH DIRECTION FROM THE SPLICE INTERSECTION.
2. APPLY LAP SEALANT AT CUT EDGES OF REINFORCED MEMBRANE AND TAPE OVERLAPS. REFER TO DETAIL VGC-2.1.
3. REFER TO DETAIL VGC-2.2A WHEN USING 90-MIL MEMBRANE.

MAXIMUM WARRANTY: 20 YEARS

VERSICO ROOFING SYSTEMS
© 2024 VERSICO

EPDM MEMBRANE SPLICE INTERSECTION

→ EPDM MEMBRANE
→ APPROVED SUBSTRATE
0 → SEE NOTE(S)

THERMOSET ROOFING SYSTEM

VGC-2.2

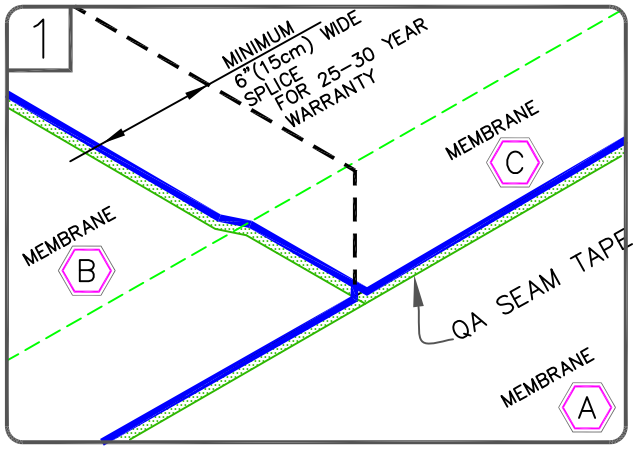

POSITION MEMBRANE TO ALLOW AN APPROXIMATE 7" (17.5cm) OVERLAP. MARK THE BOTTOM SHEET WITH AN INDELIBLE MARKER 1/2" (1.5cm) FROM THE EDGE OF THE TOP SHEET AS SHOWN. THE PRE-MARKED LINE ON THE MEMBRANE EDGE CAN ALSO BE USED AS A GUIDE.

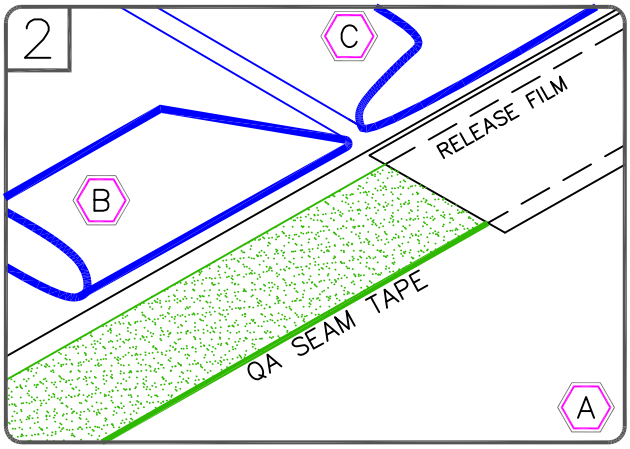

FOLD SHEETS BACK AS SHOWN. APPLY EPDM PRIMER TO THE SPLICE AREA ON BOTH SURFACES AND ALLOW TO FLASH-OFF. APPLY QA SEAM TAPE WITH RELEASE FILM ALIGNED WITH MARKED LINE.

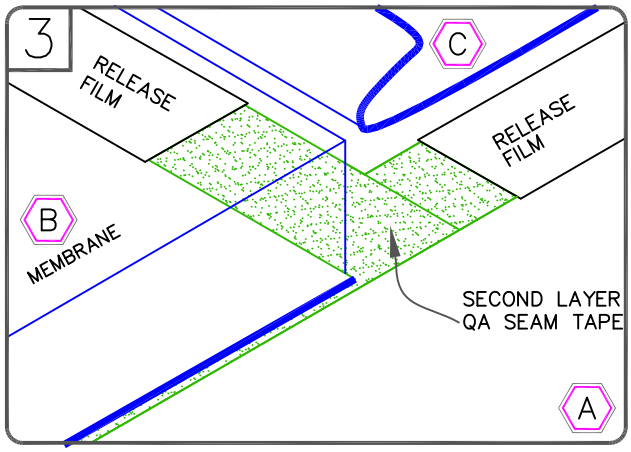

SPLICE SHEET B TO SHEET A AND APPLY SECOND PIECE OF QA SEAM TAPE BETWEEN SHEET B AND C. TRIM RELEASE FILM AS SHOWN.

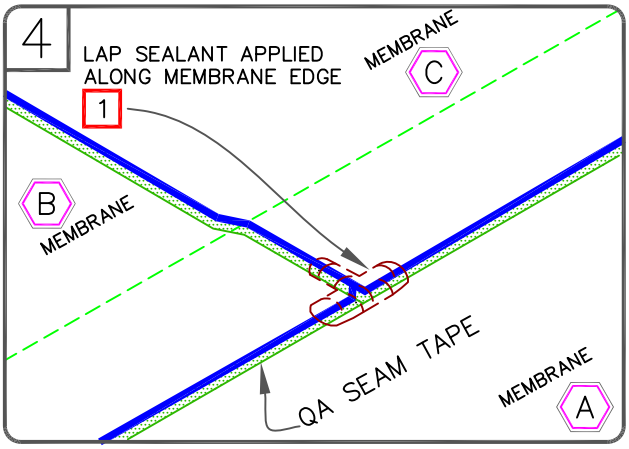

SPLICE SHEET C TO SHEET A AND B, PRESS TOP SHEET ONTO BOTTOM SHEET USING HAND PRESSURE TOWARDS THE OUTER EDGE OF THE SPLICE AND ROLL THE SPLICE AREA WITH A 2" (5cm) WIDE STEEL ROLLER.

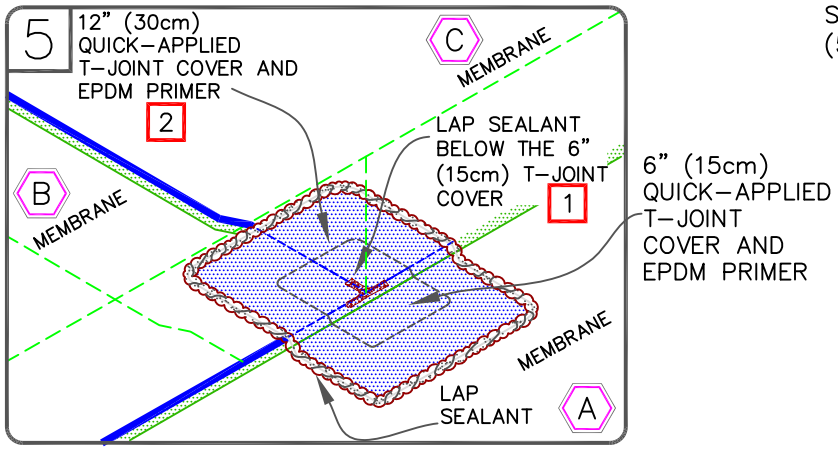

APPLY 6" (15cm) QUICK-APPLIED T-JOINT COVER AND 12" (30cm) QUICK-APPLIED T-JOINT COVER OR QUICK-APPLIED UNCURED CENTERED OVER THE INTERSECTING POINT OF THE LEADING EDGES OF THE FIELD SPLICE INTERSECTION AS SHOWN.

MAXIMUM WARRANTY: 30 YEARS

NOTES:

1. APPLY LAP SEALANT ALONG THE EDGES OF THE MEMBRANE SPLICE COVERING THE EXPOSED SPLICE TAPE 1/2" (15cm) IN EACH DIRECTION FROM THE SPLICE INTERSECTION.
2. APPLY LAP SEALANT AT CUT EDGES OF REINFORCED MEMBRANE AND TAPE OVER LAPS.

VERSICO ROOFING SYSTEMS

© 2024 VERSICO

EPDM MEMBRANE SPLICE INTERSECTION (30 YEAR WARRANTIES OR 90 MIL MEMBRANE)

→ EPDM MEMBRANE
→ APPROVED SUBSTRATE
0 → SEE NOTE(S)

VersiGard COMMON DETAILS (EPDM)

VGC-2.2A

CONTINUOUS WALL FLASHING

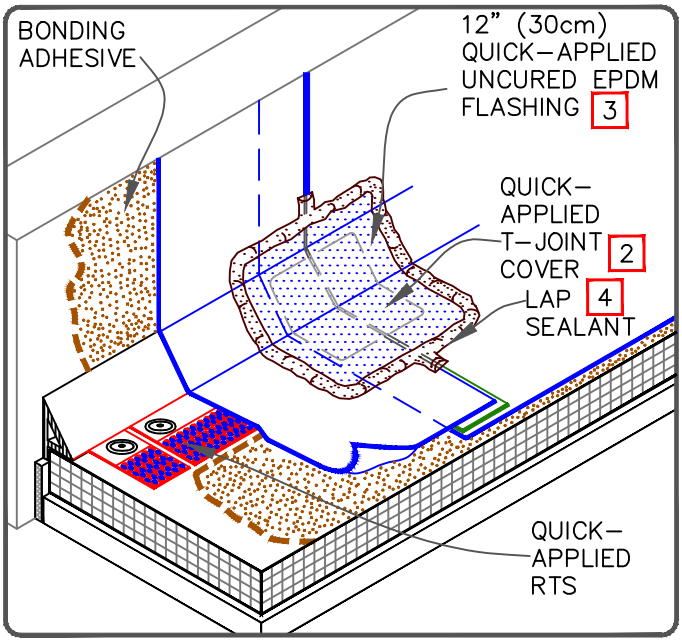

SEPARATE WALL FLASHING

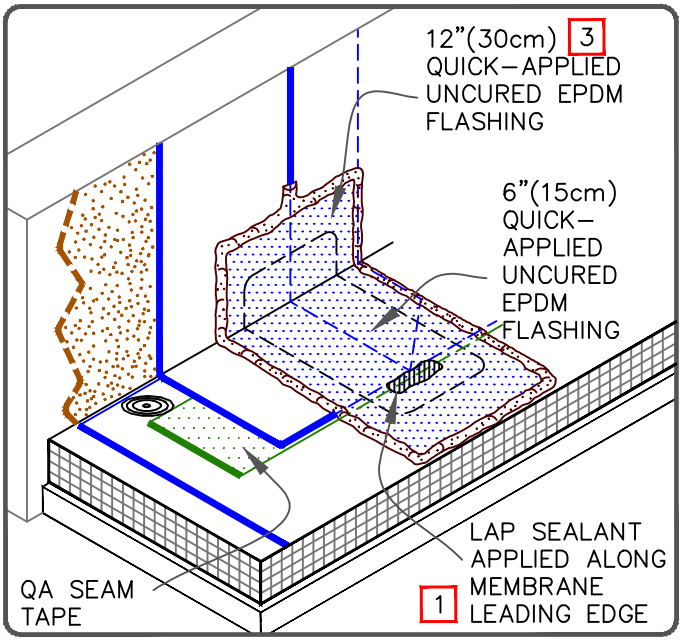

CONTINUOUS WALL FLASHING

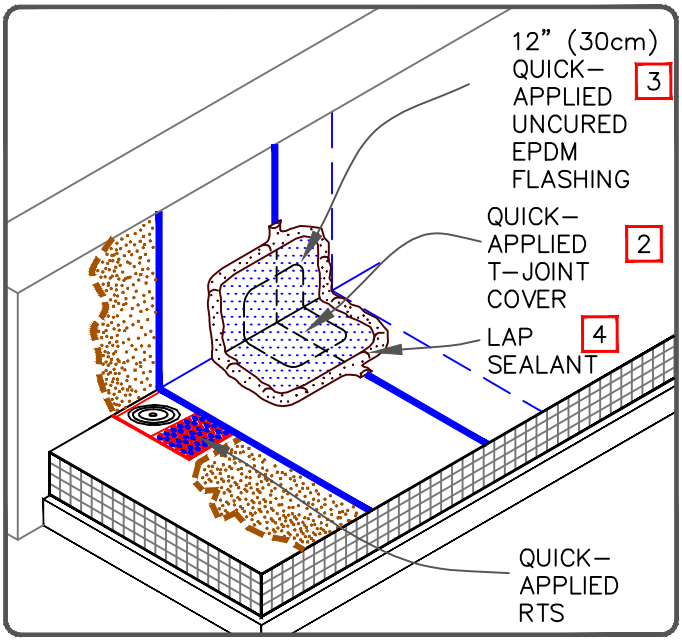

NOTES:

1. APPLY LAP SEALANT ALONG THE LEADING EDGE OF THE MEMBRANE SPLICE (UNDER THE QUICK–APPLIED UNCURED EPDM FLASHING) COVERING THE EXPOSED SPLICE TAPE APPROXIMATELY 1/2" (1.5cm) BEYOND THE SPLICE EDGE.

2. QUICK–APPLIED T–JOINT COVER OR 6" (15cm) WIDE QUICK–APPLIED FLASHING, IN CONJUNCTION WITH EPDM PRIMER, MUST BE CENTERED OVER FIELD SPLICES AT THE ANGLE CHANGE.

3. PROJECTS WITH 25 AND 30–YEAR WARRANTIES OR WHEN USING 90–MIL MEMBRANE REQUIRE FIELD SPLICES TO BE OVERLAID WITH TWO LAYERS OF QUICK–APPLIED UNCURED EPDM FLASHING. THE BOTTOM LAYER SHALL BE 6" (15cm) WIDE COVERED WITH A 12" (30cm) WIDE TOP LAYER. BOTH LAYERS SHALL BE CENTERED.

4. SEAL EXPOSED LAYER WITH LAP SEALANT.

MAXIMUM WARRANTY: 30 YEARS

VERSICO ROOFING SYSTEMS
© 2024 VERSICO

EPDM MEMBRANE SPLICES AT ANGLE CHANGE

→ EPDM MEMBRANE
→ APPROVED SUBSTRATE
0 → SEE NOTE(S)

THERMOSET ROOFING SYSTEM

VGC–2.3

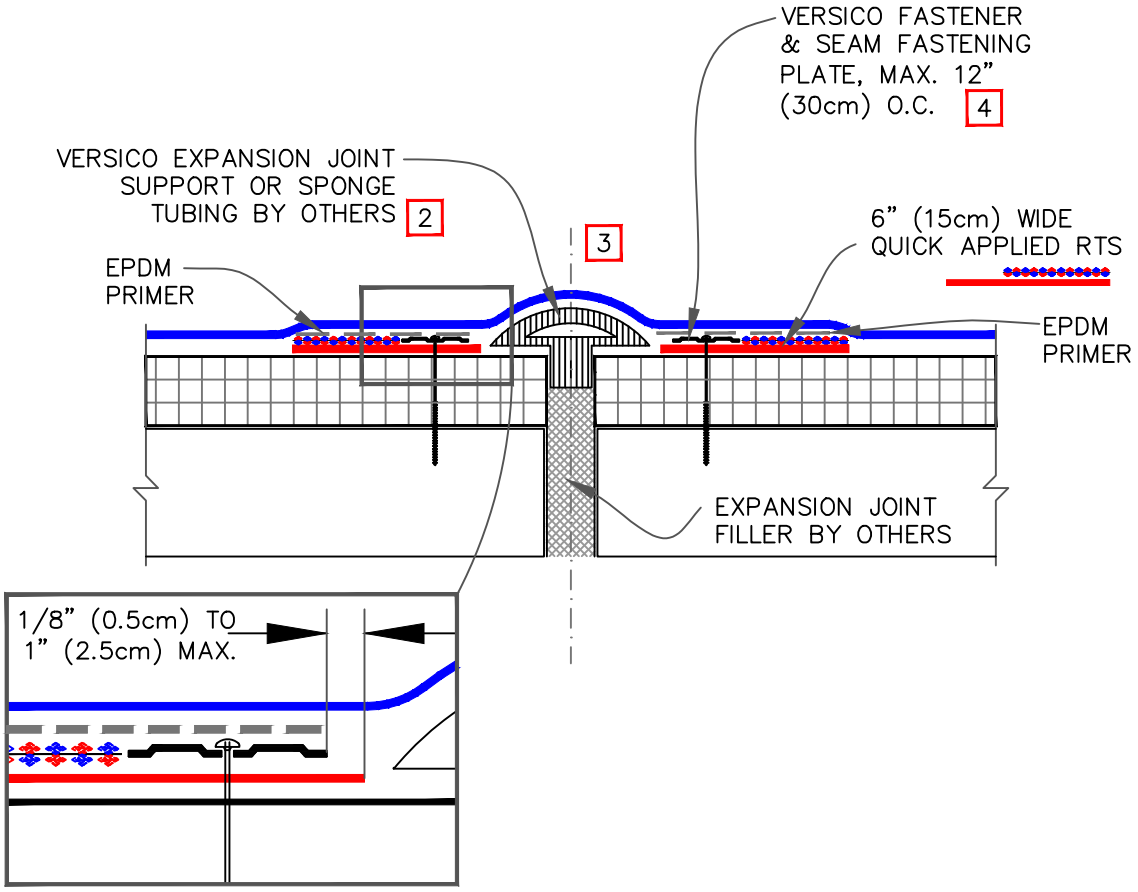

NOTES:

1. FOR EXPANSION JOINT INTERSECTIONS AND INTERSECTIONS BETWEEN EXPANSION JOINTS TO WALL OR EDGING, USE TWO LAYERS OF QUICK-APPLIED UNCURED EPDM FLASHING WITH SECOND LAYER 3" (7.5cm) LARGER THAN PREVIOUS LAYER IN ALL DIRECTIONS.

2. ROOF MEMBRANE SHALL BE LOOSE-LAID OVER THE EXPANSION JOINT SUPPORT OR SPONGE TUBING.

3. WIDTH OF JOINT SHALL BE A MINIMUM OF 3/4" (2cm) AND MAXIMUM 3" (7.5cm) WHEN USING VERSICO EXPANSION JOINTS.

4. HPX FASTENERS AND POLYMER SEAM PLATES ARE REQUIRED ON MECHANICALLY FASTENED SYSTEMS OVER STEEL DECKS.

MAXIMUM WARRANTY: 30 YEARS

VERSICO ROOFING SYSTEMS

© 2024 VERSICO

DECK-TO-DECK EXPANSION JOINT

→ EPDM MEMBRANE

→ APPROVED SUBSTRATE

0 → SEE NOTE(S)

THERMOSET ROOFING SYSTEM

VGC-3.1

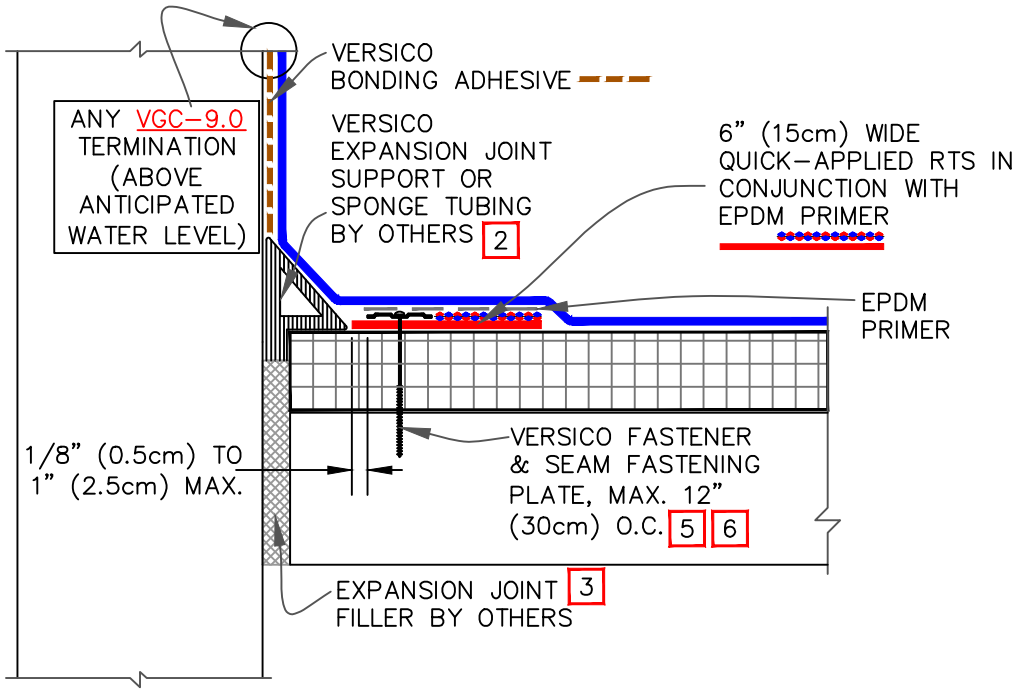

NOTES:

1. ALL OUTSIDE AND INSIDE CORNERS REQUIRE TWO COMPLETE CORNER APPLICATIONS OF QUICK–APPLIED UNCURED EPDM FLASHING AS PER DETAILS VGC–15.4A OR VGC–15.7A.
2. ROOF MEMBRANE SHALL BE LOOSE–LAID OVER THE EXPANSION JOINT SUPPORT OR SPONGE TUBING.
3. WIDTH OF JOINT SHALL BE A MINIMUM OF 3/4" (2cm) AND MAXIMUM 2" (5cm) WHEN VERSICO EXPANSION JOINT SUPPORT IS USED.
4. USE DETAIL VGC–2.3 FOR EPDM MEMBRANE SPLICES AT ANGLE CHANGES.
5. HPX FASTENERS AND POLYMER SEAM PLATES ARE REQUIRED ON MECHANICALLY FASTENED SYSTEMS OVER STEEL DECKS.
6. MAXIMUM 6" (15cm) FASTENER SPACING FOR WARRANTY WIND SPEEDS GREATER THAN 90 MPH OR WARRANTIES EXCEEDING 20 YEARS.

MAXIMUM WARRANTY: 30 YEARS

VERSICO ROOFING SYSTEMS
© 2024 VERSICO

DECK–TO–WALL
EXPANSION JOINT

→ EPDM MEMBRANE
→ APPROVED SUBSTRATE
0 → SEE NOTE(S)

THERMOSET
ROOFING SYSTEM

VGC–3.2

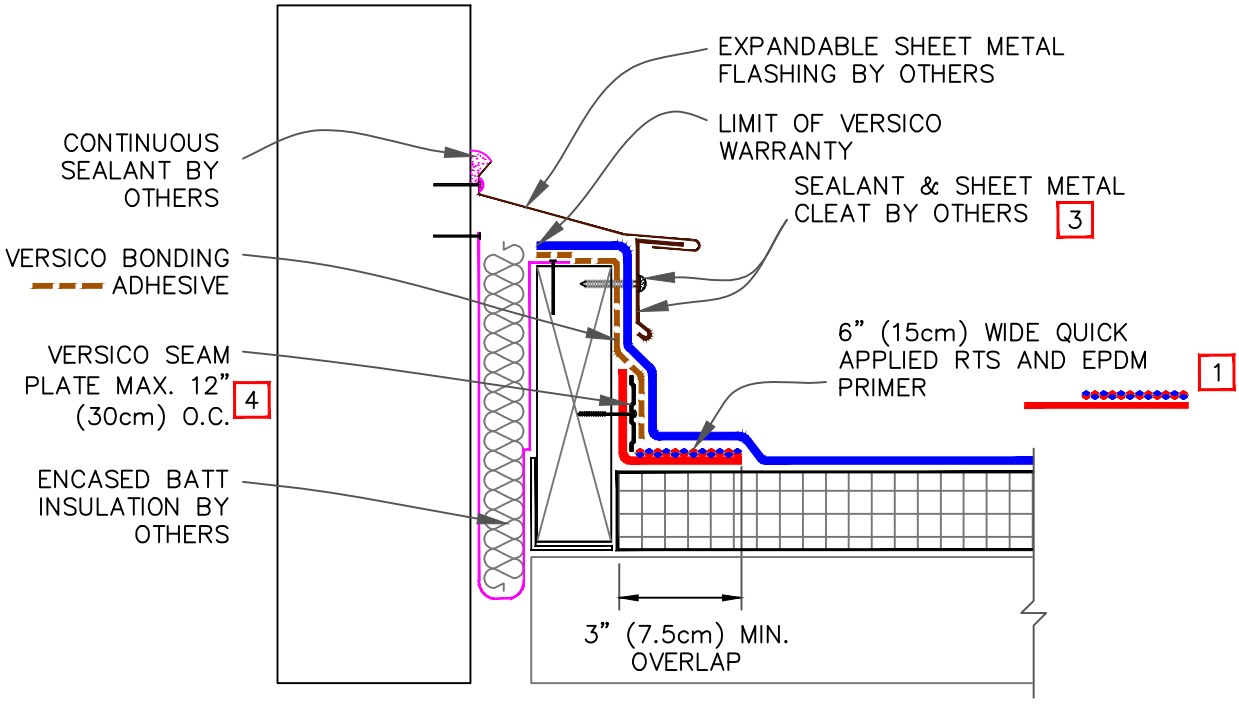

NOTES:

1. QUICK APPLIED RTS MAY BE INSTALLED INTO THE STRUCTURAL DECK. HPX FASTENERS AND POLYMER SEAM PLATES ARE REQUIRED ON MECHANICALLY–FASTENED ROOFING SYSTEMS OVER STEEL DECKS.
2. USE DETAIL VGC–2.3 FOR EPDM MEMBRANE SPLICES AT ANGLE CHANGES.
3. SEAL FASTENERS BY APPLYING WATER CUT–OFF MASTIC UNDER THE COUNTER–FLASHING, OR USING EPDM WASHERS, OR CAULKING THE FASTENERS HEAD.
4. ALL OUTSIDE AND INSIDE CORNERS REQUIRE TWO COMPLETE CORNER APPLICATIONS OF QUICK–APPLIED UNCURED EPDM FLASHING AS PER DETAILS VGC–15.4A OR VGC–15.7A.
5. MAXIMUM 6" (15cm) FASTENER SPACING FOR WARRANTY WIND SPEEDS GREATER THAN 90 MPH OR WARRANTIES EXCEEDING 20 YEARS.

MAXIMUM WARRANTY: 30 YEARS

VERSICO ROOFING SYSTEMS

© 2024 VERSICO

SHEAR/EXPANSION JOINT

→ EPDM MEMBRANE

→ APPROVED SUBSTRATE

0 → SEE NOTE(S)

THERMOSET ROOFING SYSTEM

VGC–3.3

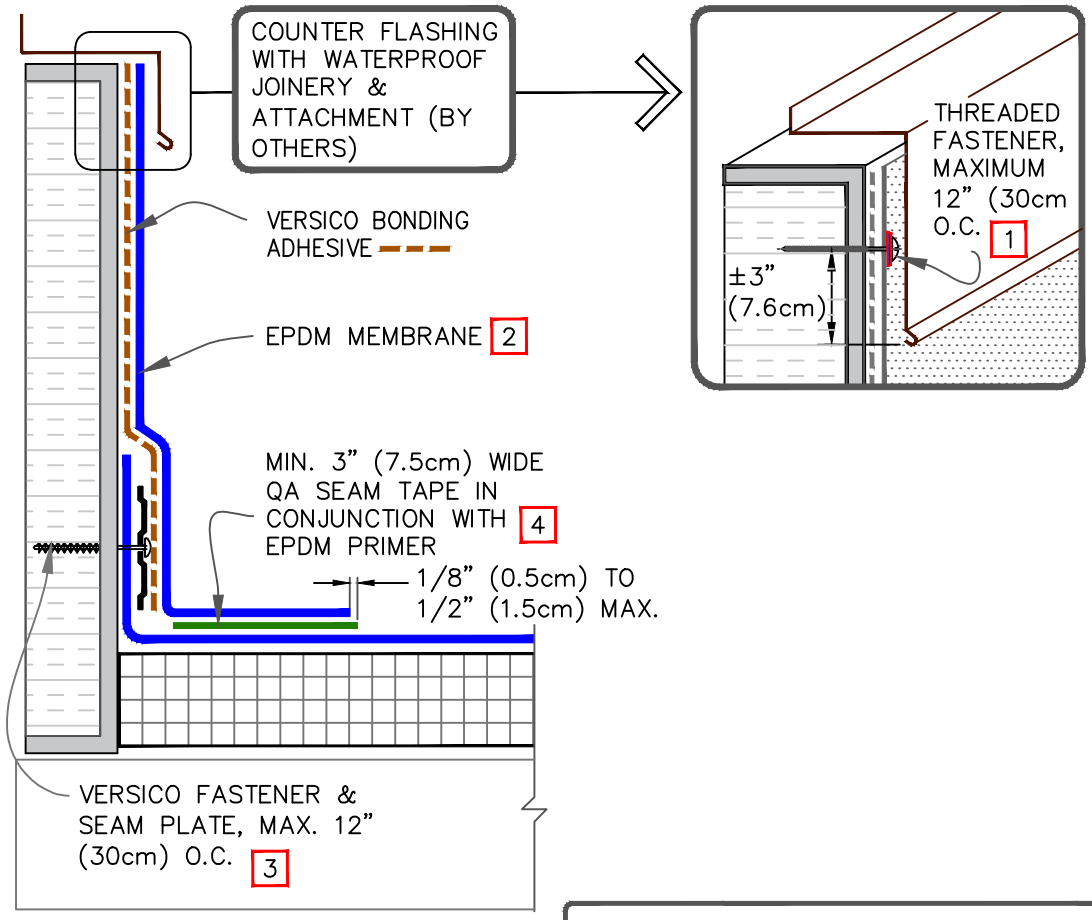

NOTES:

1. WHEN MECHANICAL FASTENERS ARE USED TO PENETRATE THE METAL COUNTER-FLASHING, USE EPDM WASHERS, APPLY WATER CUT-OFF MASTIC UNDER THE COUNTER-FLASHING OR CAULK THE FASTENER HEADS.

2. LAP SEALANT IS REQUIRED ON CUT-EDGES OF REINFORCED MEMBRANE.

3. SEAM PLATES AND FASTENERS MAY BE INSTALLED INTO THE STRUCTURAL DECK AND THEN HPX FASTENERS AND POLYMER SEAM PLATES ARE REQUIRED FOR MECHANICALLY-FASTENED ROOFING SYSTEMS OVER STEEL DECKS.

4. MEMBRANE SPLICES SHALL INCORPORATE 6" (15cm) WIDE QA SEAM TAPE FOR PROJECTS WITH 25 AND 30-YEAR WARRANTIES.

5. IF THE VERTICAL SPLICE ON THE CURB FLASHING IS NOT LOCATED AT THE CORNER, USE DETAIL VGC-2.3 FOR EPDM MEMBRANE SPLICES AT ANGLE CHANGES.

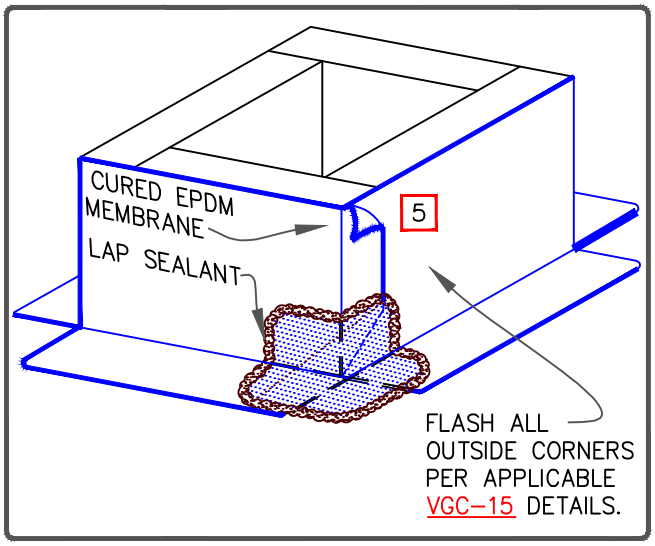

MAXIMUM WARRANTY: 30 YEARS

VERSICO ROOFING SYSTEMS
© 2024 VERSICO

CURB FLASHING – EPDM MEMBRANE

→ EPDM MEMBRANE
→ APPROVED SUBSTRATE
0 → SEE NOTE(S)

THERMOSET ROOFING SYSTEM

VGC-5.1

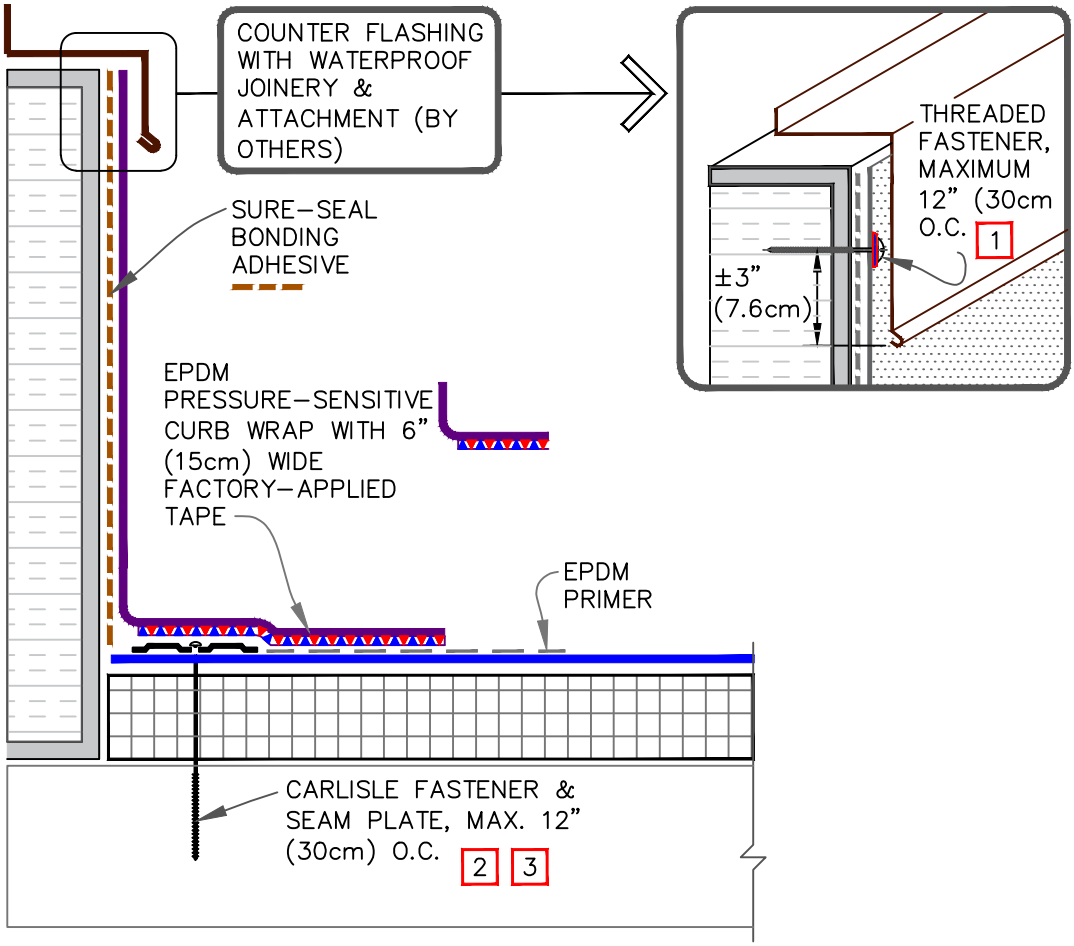

NOTES:

1. WHEN MECHANICAL FASTENERS ARE USED TO PENETRATE THE METAL COUNTER-FLASHING, USE EPDM WASHERS, APPLY WATER CUT-OFF MASTIC UNDER THE COUNTER-FLASHING OR CAULK THE FASTENER HEADS.
2. SEAM PLATES AND FASTENERS MAY BE INSTALLED INTO THE VERTICAL SUBSTRATE.
3. HPX FASTENERS AND POLYMER SEAM PLATES ARE REQUIRED FOR MECHANICALLY FASTENED SYSTEMS OVER STEEL DECKS.
4. IF THE VERTICAL SPLICE ON THE CURB FLASHING IS NOT LOCATED AT THE CORNER, USE DETAIL VGC-2.3 FOR EPDM MEMBRANE SPLICES AT ANGLE CHANGES.

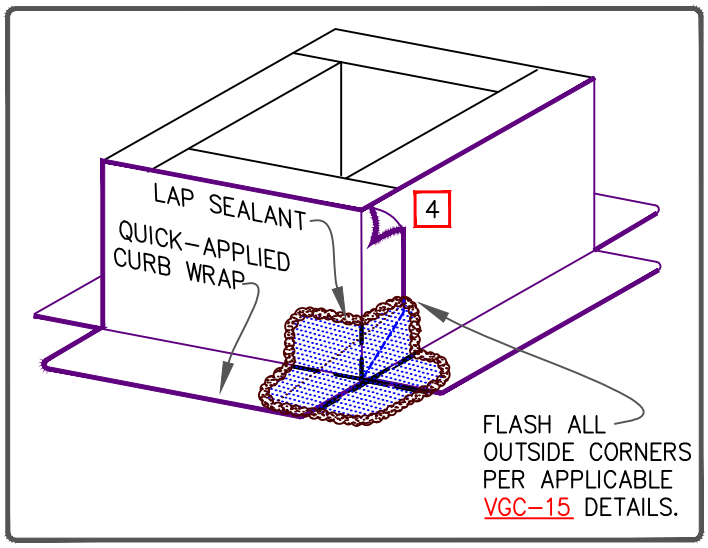

MAXIMUM WARRANTY: 30 YEARS

VERSICO ROOFING SYSTEMS
© 2024 VERSICO

CURB FLASHING – QUICK-APPLIED CURB WRAP WITH 6" TAPE

→ EPDM MEMBRANE
→ APPROVED SUBSTRATE
0 → SEE NOTE(S)

THERMOSET ROOFING SYSTEM

VGC-5.2

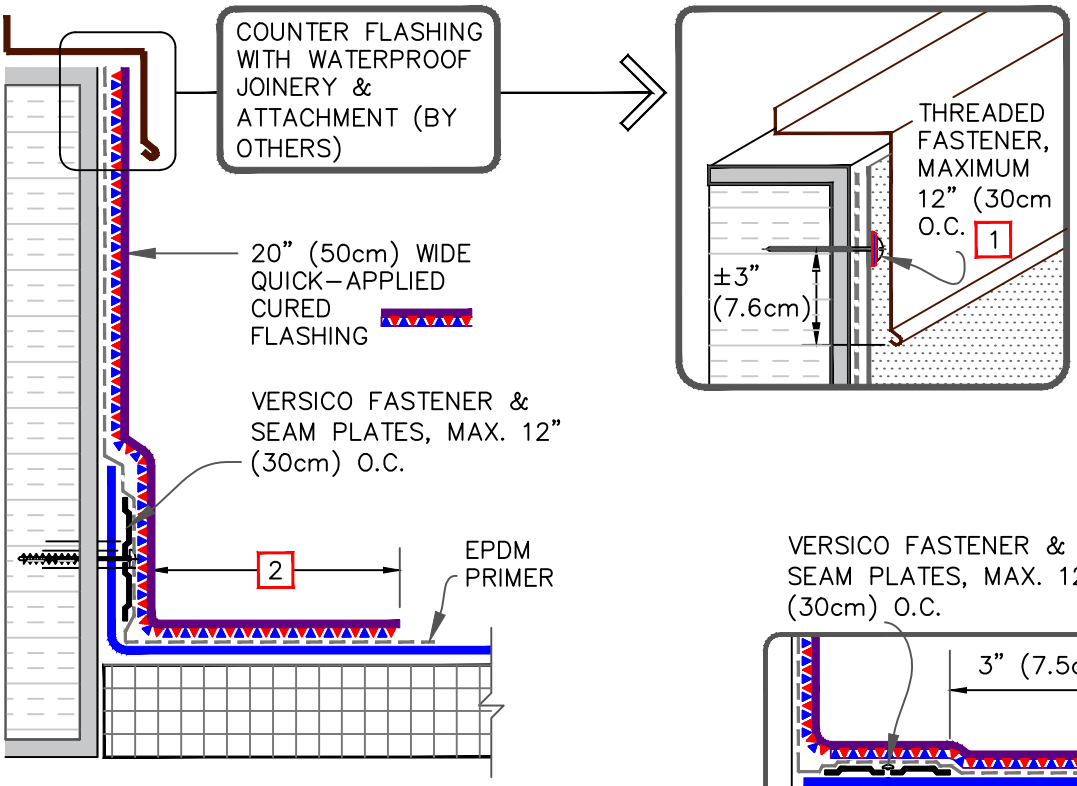

FASTENERS INTO CURB

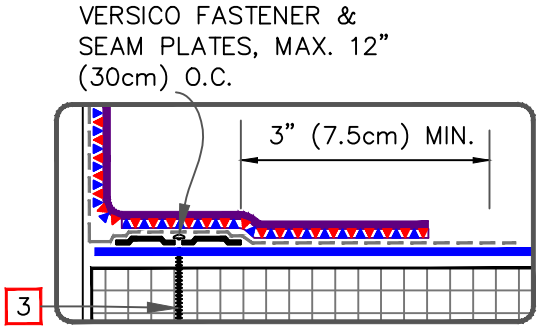

FASTENERS INTO DECK

NOTES:

1. WHEN MECHANICAL FASTENERS ARE USED TO PENETRATE THE METAL COUNTER-FLASHING, USE EPDM WASHERS, APPLY WATER CUT-OFF MASTIC UNDER THE COUNTER-FLASHING OR CAULK THE FASTENER HEADS.

2. 3" (7.5cm) FOR UP TO 20 YEARS AND 6" (15cm) FOR 25/30 YEARS.

3. HPX FASTENERS AND POLYMER SEAM PLATES ARE REQUIRED FOR MECHANICALLY-FASTENED ROOFING SYSTEMS OVER STEEL DECKS.

4. IF THE VERTICAL SPLICE ON THE CURB FLASHING IS NOT LOCATED AT THE CORNER, USE DETAIL VGC-2.3 FOR EPDM MEMBRANE SPLICES AT ANGLE CHANGES.

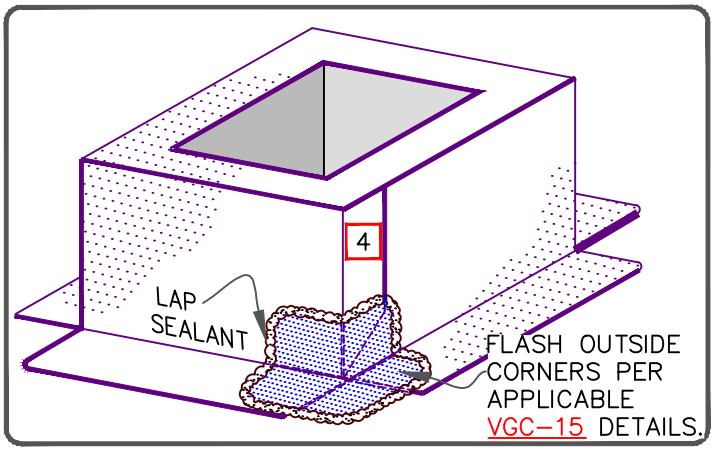

MAXIMUM WARRANTY: 30 YEARS

VERSICO ROOFING SYSTEMS
© 2024 VERSICO

CURB FLASHING – WITH 20" QUICK-APPLIED CURED FLASHING

→ EPDM MEMBRANE
→ APPROVED SUBSTRATE
0 → SEE NOTE(S)

THERMOSET ROOFING SYSTEM

VGC-5.3

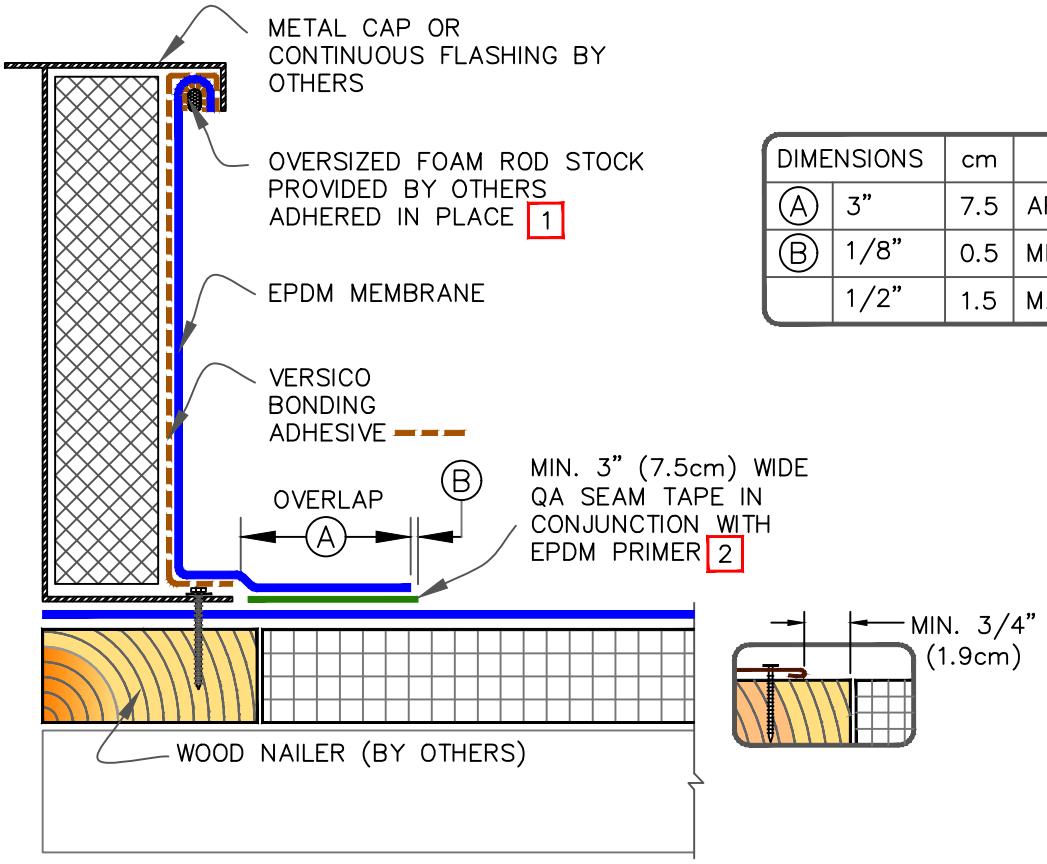

DIMENSIONS		cm	
A	3"	7.5	APPROX.
B	1/8"	0.5	MIN.
	1/2"	1.5	MAX.

NOTES:

1. LENGTH OF ROD STOCK IS LIMITED TO 4' (1.2m). USE INDIVIDUAL SECTIONS OF ROD STOCK FOR LONGER DIMENSIONS.
2. MEMBRANE SPLICES SHALL INCORPORATE 6" (15cm) WIDE QA SEAM TAPE FOR PROJECTS WITH 25 and 30-YEAR WARRANTIES.
3. WHEN METAL FLANGE IS ON TOP OF MEMBRANE USE DETAIL VGC-15.6 (20 YEAR) OR VGC-15.7A (25/30 YEAR) TO ACHIEVE SUFFICIENT COVERAGE AT THE CORNERS.
4. DETAIL IS NOT ACCEPTABLE FOR VIBRATING ROOF TOP UNITS.

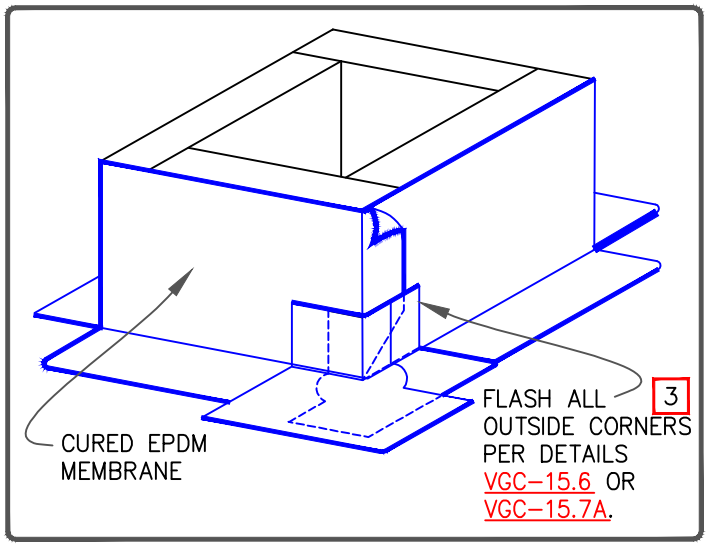

MAXIMUM WARRANTY: 30 YEARS

VERSICO ROOFING SYSTEMS
© 2024 VERSICO

SELF-FLASHING CURB

EPDM MEMBRANE
APPROVED SUBSTRATE
0 SEE NOTE(S)

THERMOSET ROOFING SYSTEM

VGC-5.4

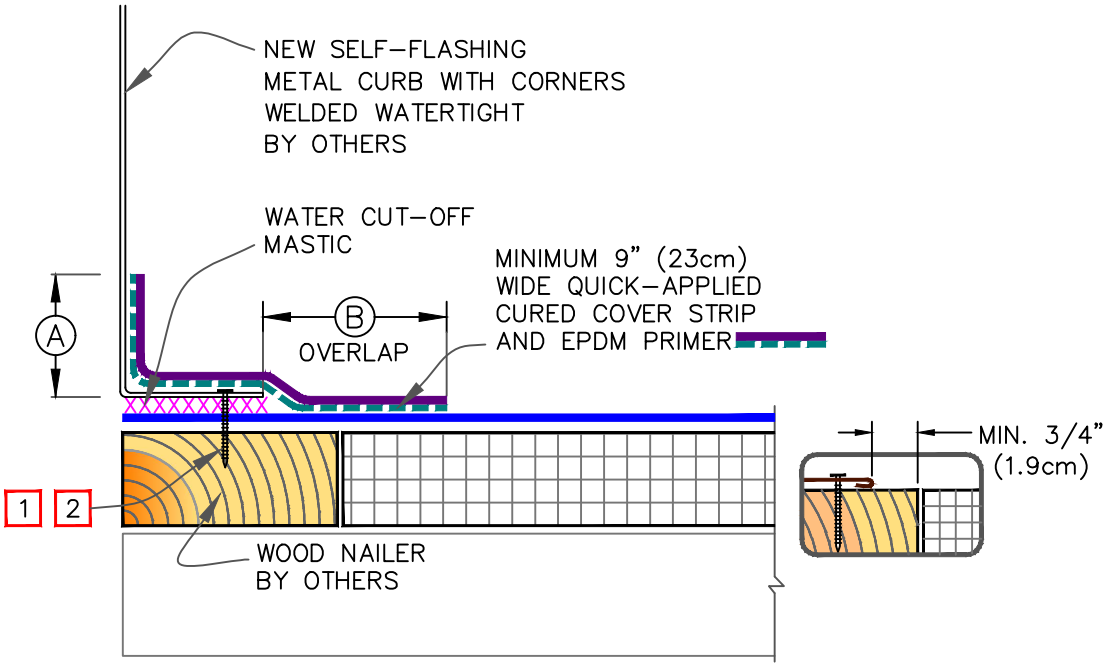

DIMENSIONS		cm	
A	2"	5	MIN.
B	3"	7.5	APPROX.

NOTES:

1. CONSULT THE RESPECTIVE MANUFACTURER OF THE SELF-FLASHING METAL CURB FOR PROPER SECUREMENT.
2. WATER CUT-OFF MASTIC MUST BE HELD UNDER CONSTANT COMPRESSION.
3. USE DETAIL VGC-15.6 TO ACHIEVE SUFFICIENT COVERAGE OF METAL FLANGE AT CORNERS.
4. IF THE VERTICAL SPLICE ON THE CURB FLASHING IS NOT LOCATED AT THE CORNER, USE DETAIL VGC-2.3 FOR EPDM MEMBRANE SPLICES AT ANGLE CHANGES.

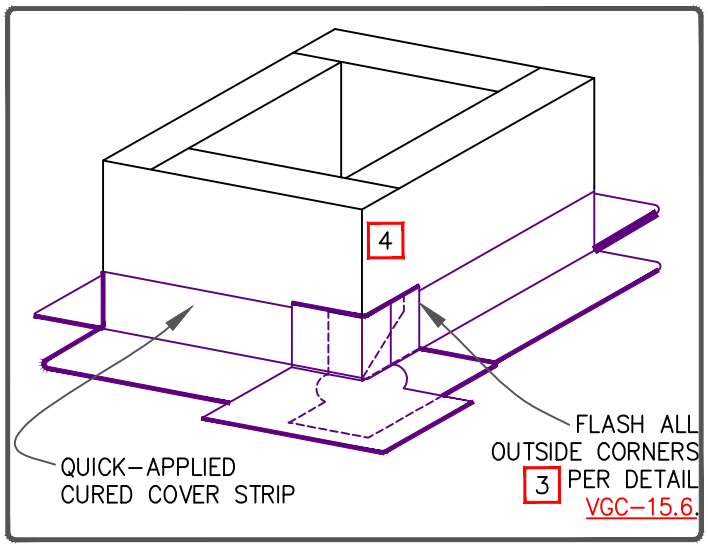

MAXIMUM WARRANTY: 20 YEARS

VERSICO ROOFING SYSTEMS
© 2024 VERSICO

SELF-FLASHING CURB, ROOF HATCH, OR SKYLIGHT

→ EPDM MEMBRANE
→ APPROVED SUBSTRATE
0 → SEE NOTE(S)

THERMOSET ROOFING SYSTEM

VGC-5.5

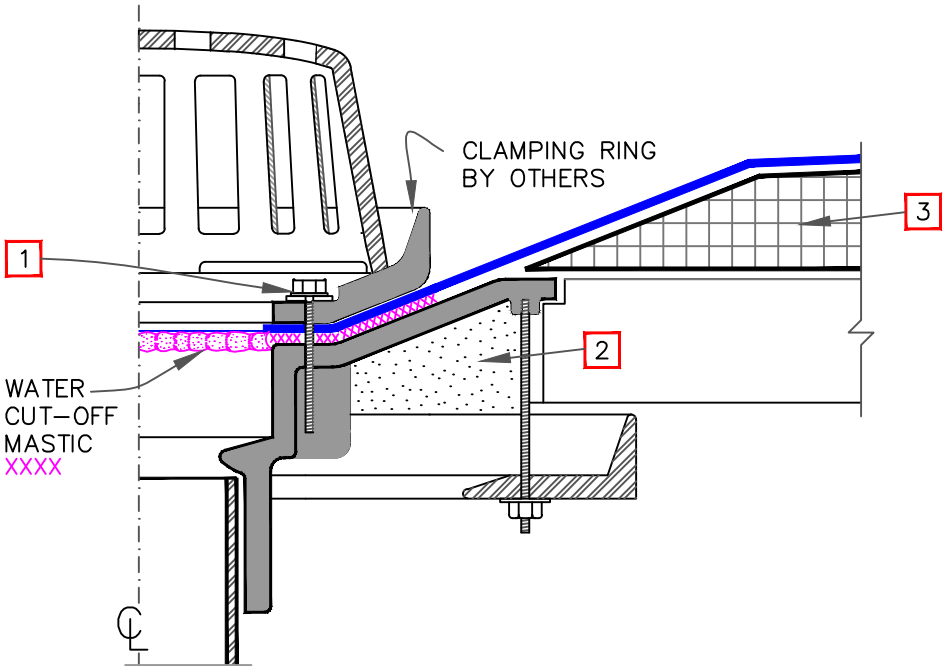

NOTES:

1. ALL BOLTS OR CLAMPS MUST BE IN PLACE TO PROVIDE CONSTANT COMPRESSION ON WATER CUT–OFF MASTIC.

2. REMOVE EXISTING LEAD, FLASHING MATERIAL & ENSURE THE DRAIN RING IS COMPLETELY CLEAN DOWN TO BARE METAL.

3. INSULATION TAPER SHALL NOT BE GREATER THAN 6" (15cm) IN 12" (30cm) HORIZONTAL. REINFORCED EPDM IS LIMITED TO A TAPER LESS THAN 3" (7.5CM) PER FOOT. IF GREATER USE DETAIL VGC–6.2.

4. THE HOLE IN THE MEMBRANE SHALL EXCEED THE DIAMETER OF THE DRAIN PIPE, BUT SHALL BE NO LESS THAN 1/2" (1.5cm) FROM THE ATTACHMENT POINTS OF THE DRAIN CLAMPING RING.

5. FIELD SPLICES MUST BE LOCATED AT LEAST 6" (15cm) OUTSIDE THE DRAIN SUMP.

6. ROOF DRAIN SIZE AND NUMBER OF DRAINS SHALL BE IN ACCORDANCE WITH THE LOCAL CODES.

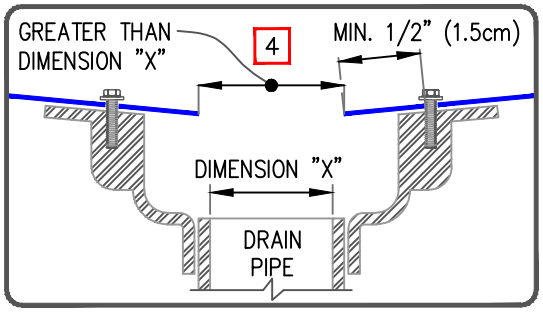

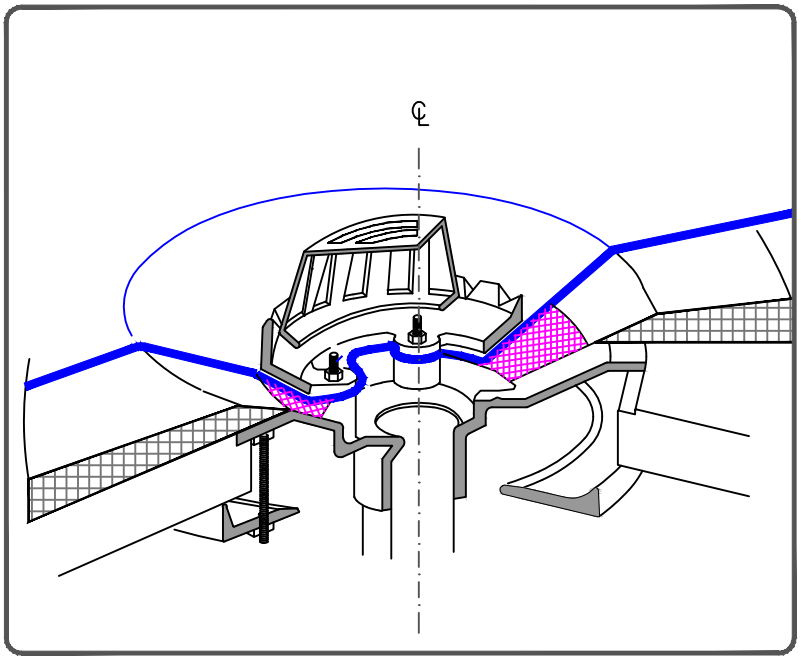

MAXIMUM WARRANTY: 30 YEARS

VERSICO ROOFING SYSTEMS
© 2024 VERSICO

ROOF DRAIN

→ EPDM MEMBRANE
→ APPROVED SUBSTRATE
0 → SEE NOTE(S)

THERMOSET ROOFING SYSTEM

VGC–6.1

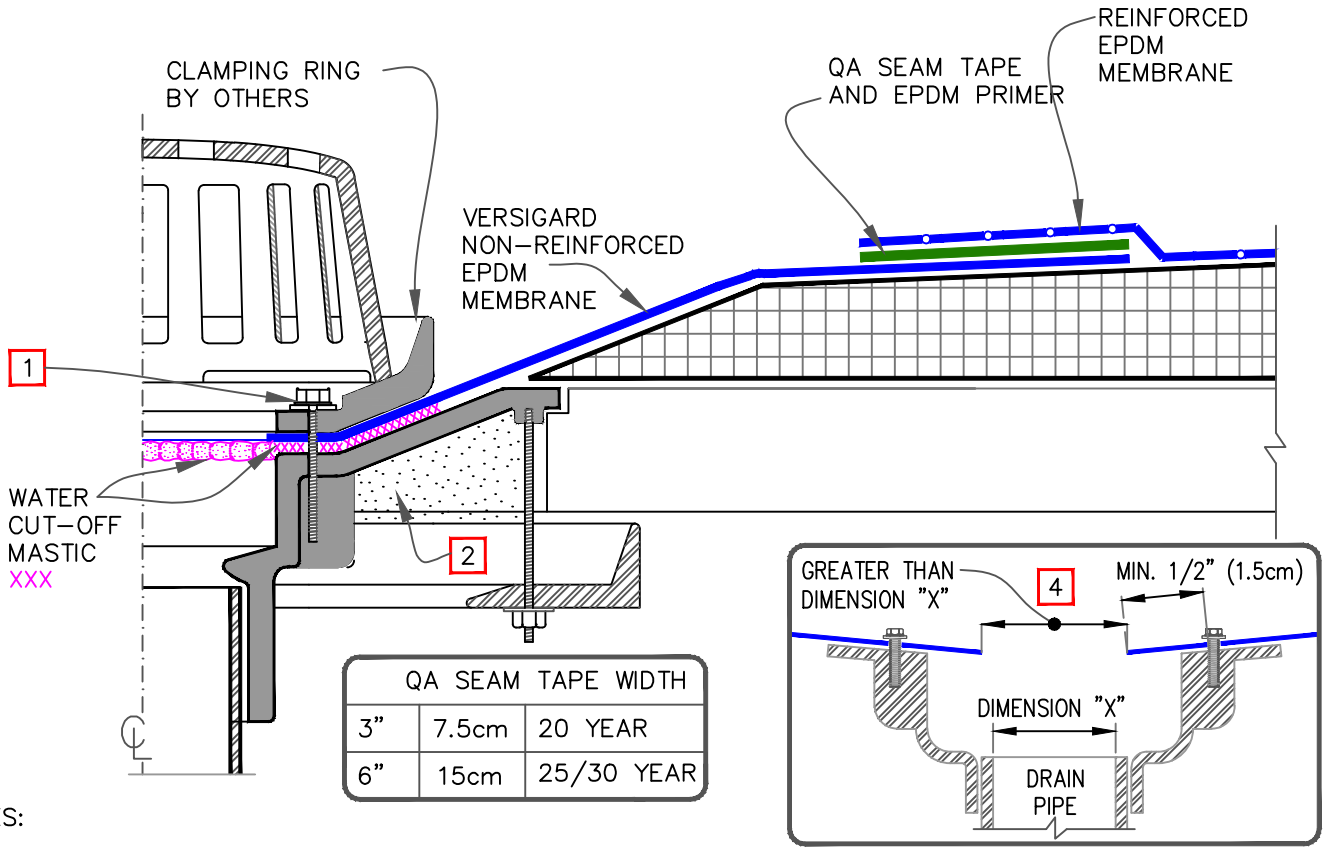

QA SEAM TAPE WIDTH		
3"	7.5cm	20 YEAR
6"	15cm	25/30 YEAR

NOTES:

1. ALL BOLTS OR CLAMPS MUST BE IN PLACE TO PROVIDE CONSTANT COMPRESSION ON WATER CUT-OFF MASTIC.
2. REMOVE EXISTING LEAD, FLASHING MATERIAL & ENSURE THE DRAIN RING IS COMPLETELY CLEAN DOWN TO BARE METAL.
3. USE DETAIL VGMA-6.0 FOR MECHANICALLY-FASTENED SYSTEMS.
4. THE HOLE IN THE MEMBRANE SHALL EXCEED THE DIAMETER OF THE DRAIN PIPE, BUT SHALL BE NO LESS THAN 1/2" (1.5cm) FROM THE ATTACHMENT POINTS OF THE DRAIN CLAMPING RING.
5. ROOF DRAIN SIZE AND NUMBER OF DRAINS SHALL BE IN ACCORDANCE WITH THE LOCAL CODES.
6. FIELD SPLICES MUST BE LOCATED AT LEAST 6" (15cm) OUTSIDE THE DRAIN SUMP.
7. VERSICO RECOMMENDS THE DRAIN TARGET SPLICE BE SHINGLED
   - 7.1. CUT A SQUARE HOLE IN THE FIELD SHEET TO BE AT LEAST 6" (15cm) OUTSIDE THE DRAIN SUMP
   - 7.2. APPLY PRIMER AND QA SEAM TAPE TO THE BOTTOM OF THE FIELD SHEET
   - 7.3. PRIME THE TARGET PIECE OF NR EPDM
   - 7.4. MATE THE TARGET TO THE TAPE
   - 7.5. APPLY BONDING ADHESIVE TO ADHERE FIELD AND TARGET MEMBRANE TO THE SUBSTRATE

MAXIMUM WARRANTY: 30 YEARS

VERSICO ROOFING SYSTEMS
© 2024 VERSICO

ROOF DRAIN – REINFORCED FIELD SHEET WITH SUMP EXCEEDING 3" PER FOOT

→ EPDM MEMBRANE
→ APPROVED SUBSTRATE
0 → SEE NOTE(S)

THERMOSET ROOFING SYSTEM

VGC-6.2

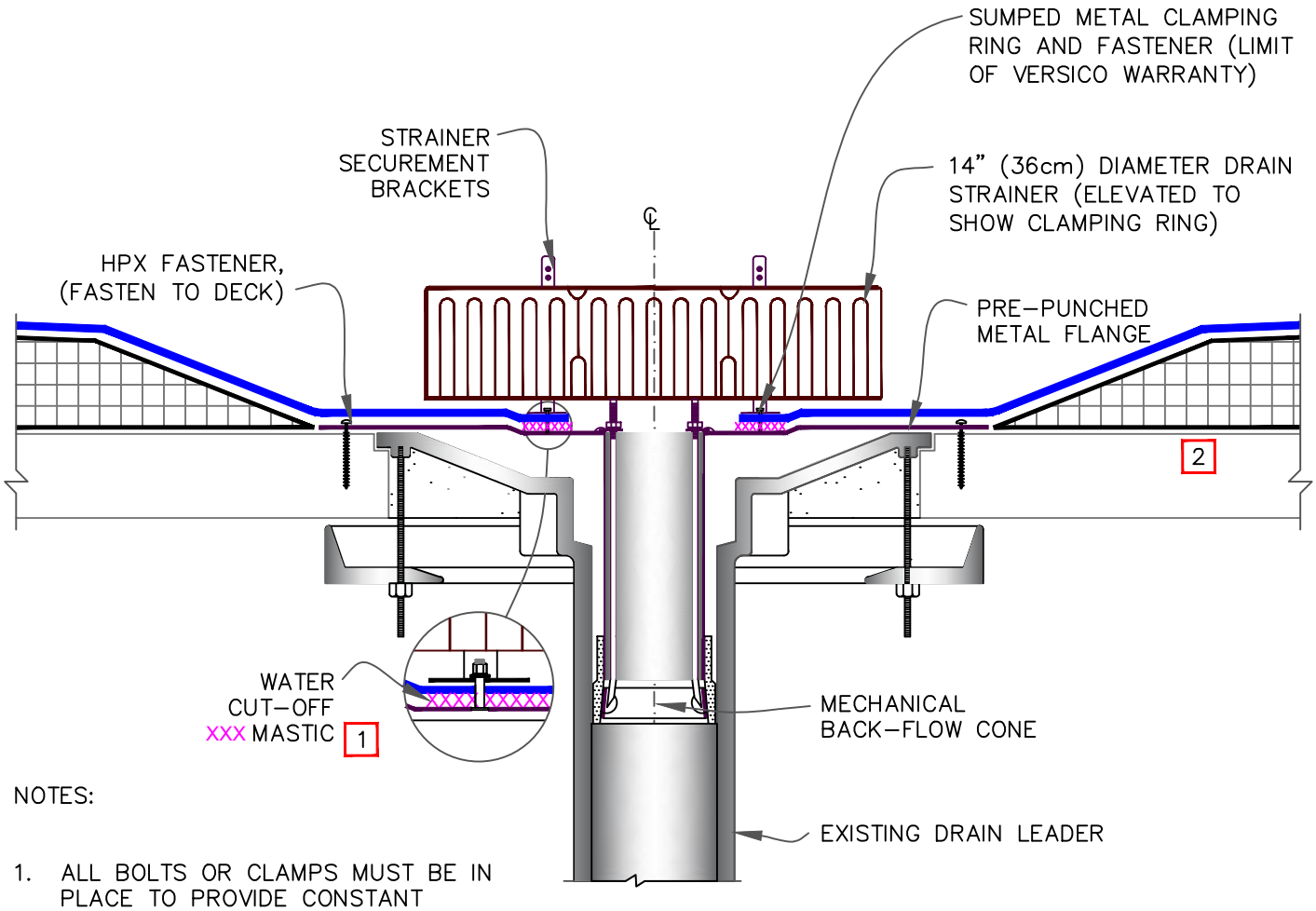

NOTES:

1. ALL BOLTS OR CLAMPS MUST BE IN PLACE TO PROVIDE CONSTANT COMPRESSION ON WATER CUT-OFF MASTIC.
2. INSULATION TAPER SHALL NOT BE GREATER THAN 6" (15cm) IN 12" (30cm) HORIZONTAL.
3. THE HOLE IN THE MEMBRANE SHALL <u>EXCEED</u> THE DIAMETER OF THE DRAIN PIPE, BUT SHALL BE NO LESS THAN 1/2" (1.5cm) FROM THE ATTACHMENT POINTS OF THE DRAIN CLAMPING RING.
4. FIELD SPLICES MUST BE LOCATED AT LEAST 6" (15cm) OUTSIDE THE DRAIN SUMP.
5. ROOF DRAIN SIZE AND NUMBER OF DRAINS SHALL BE IN ACCORDANCE WITH THE LOCAL CODES.

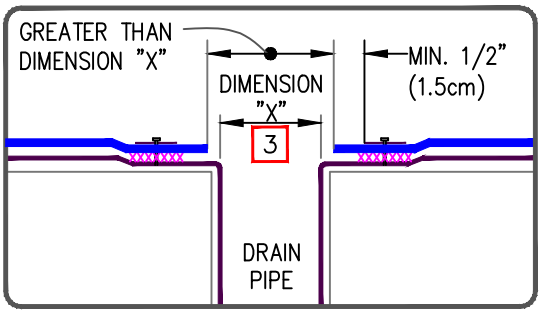

MAXIMUM WARRANTY: 30 YEARS

VERSICO ROOFING SYSTEMS
© 2024 VERSICO

VERSIGARD INSERT DRAIN

→ EPDM MEMBRANE
→ APPROVED SUBSTRATE
0 → SEE NOTE(S)

THERMOSET ROOFING SYSTEM

VGC-6.3

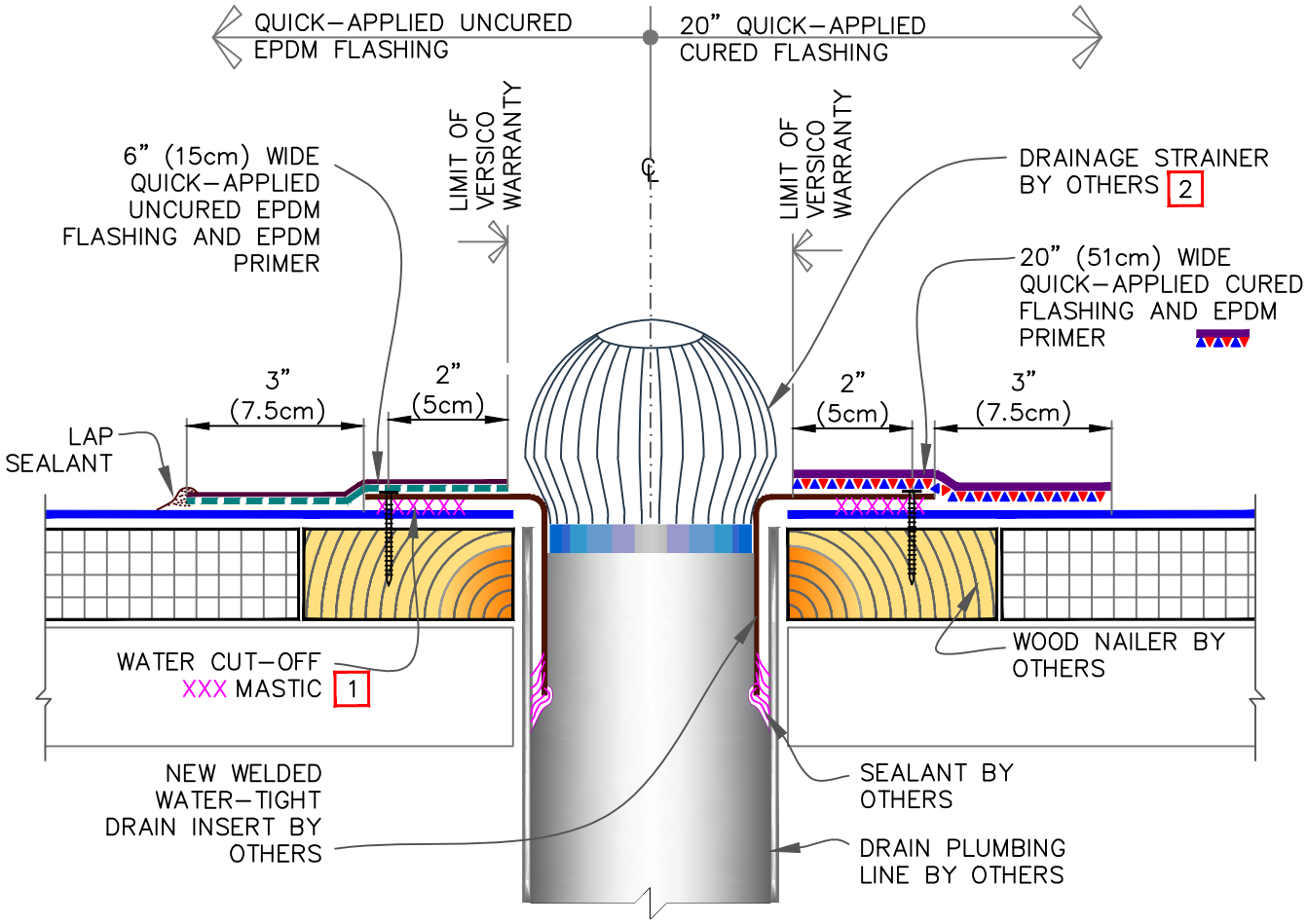

NOTES:

1. WATER CUT–OFF MASTIC MUST BE UNDER CONSTANT COMPRESSION.
2. CONSULT SPECIFIER OR APPLICABLE CODES FOR ADEQUATE DRAINAGE STRAINER TO AVOID PONDING WATER. DO NOT RESTRICT WATER FLOW.
3. FOR PROJECTS WITH 25 AND 30–YEAR WARRANTIES, THE DRAIN INSERT FLANGE MUST BE OVERLAID WITH TWO LAYERS OF QUICK–APPLIED FLASHING. THE BOTTOM LAYER SHALL BE 6" (15cm) WIDE QUICK–APPLIED UNCURED EPDM FLASHING OR QUICK–APPLIED CURED COVER STRIP COVERED WITH A 9" (23cm) WIDE TOP LAYER OF QUICK–APPLIED UNCURED EPDM FLASHING. SEAL TOP LAYER WITH CONTINUOUS LAP SEALANT.

MAXIMUM WARRANTY: 30 YEARS

VERSICO ROOFING SYSTEMS
© 2024 VERSICO

INSERT DRAIN THROUGH DECK

→ EPDM MEMBRANE
→ APPROVED SUBSTRATE
0 → SEE NOTE(S)

THERMOSET ROOFING SYSTEM

VGC–6.4

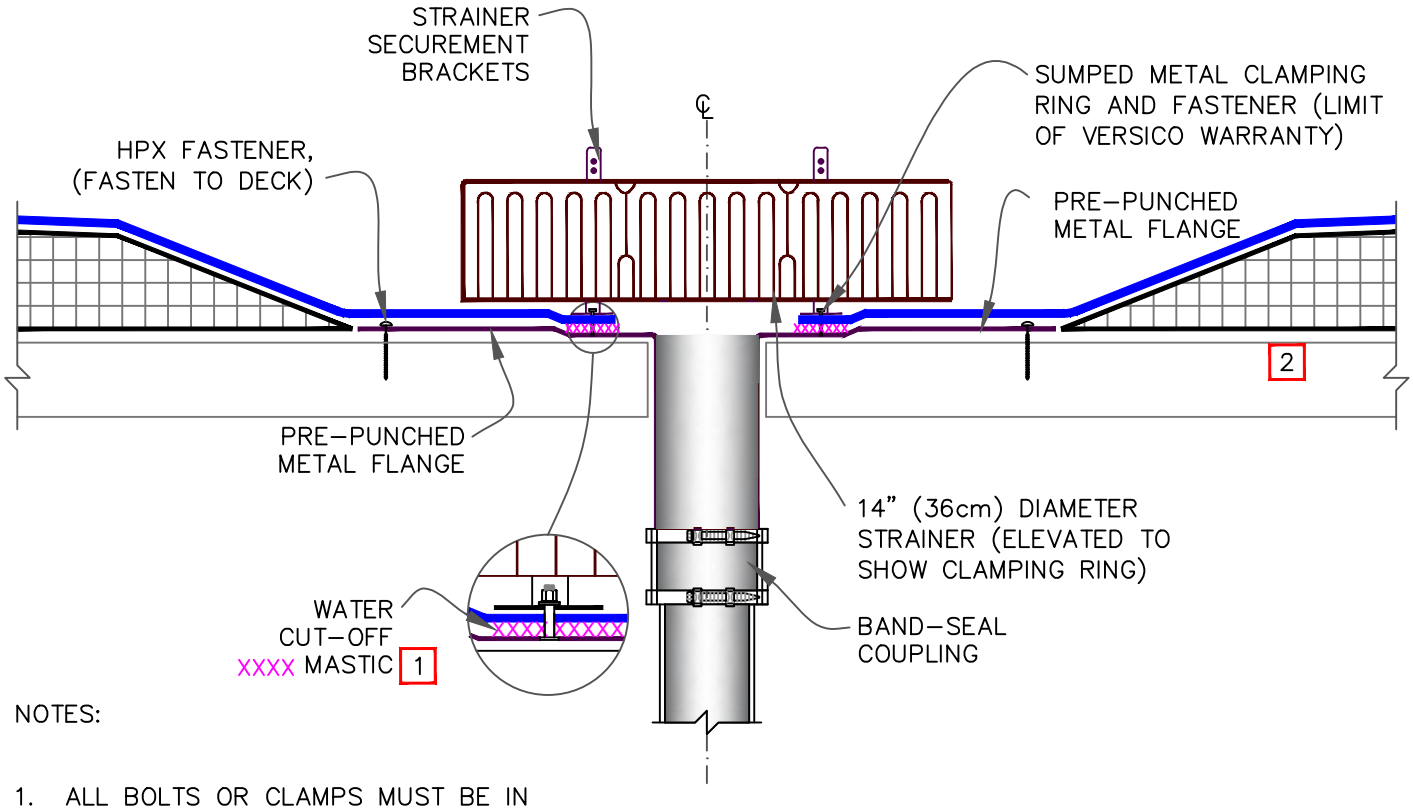

NOTES:

1. ALL BOLTS OR CLAMPS MUST BE IN PLACE TO PROVIDE CONSTANT COMPRESSION ON WATER CUT-OFF MASTIC.
2. INSULATION TAPER SHALL NOT BE GREATER THAN 6" (15cm) IN 12" (30cm) HORIZONTAL.
3. THE HOLE IN THE MEMBRANE SHALL EXCEED THE DIAMETER OF THE DRAIN PIPE, BUT SHALL BE NO LESS THAN 1/2" (1.5cm) FROM THE ATTACHMENT POINTS OF THE DRAIN CLAMPING RING.
4. FIELD SPLICES MUST BE LOCATED AT LEAST 6" (15cm) OUTSIDE THE DRAIN SUMP.
5. ROOF DRAIN SIZE AND NUMBER OF DRAINS SHALL BE IN ACCORDANCE WITH THE LOCAL CODES.

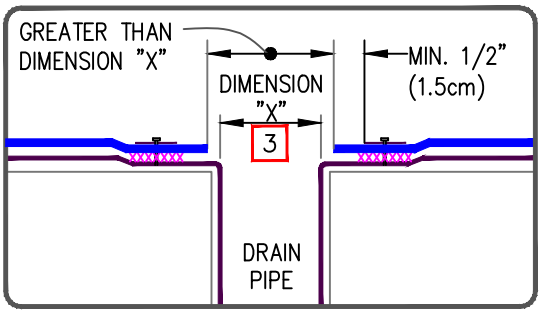

MAXIMUM WARRANTY: 30 YEARS

VERSICO ROOFING SYSTEMS
© 2024 VERSICO

VERSIGARD ADD-ON DRAIN

→ EPDM MEMBRANE
→ APPROVED SUBSTRATE
0 → SEE NOTE(S)

THERMOSET ROOFING SYSTEM
VGC-6.5

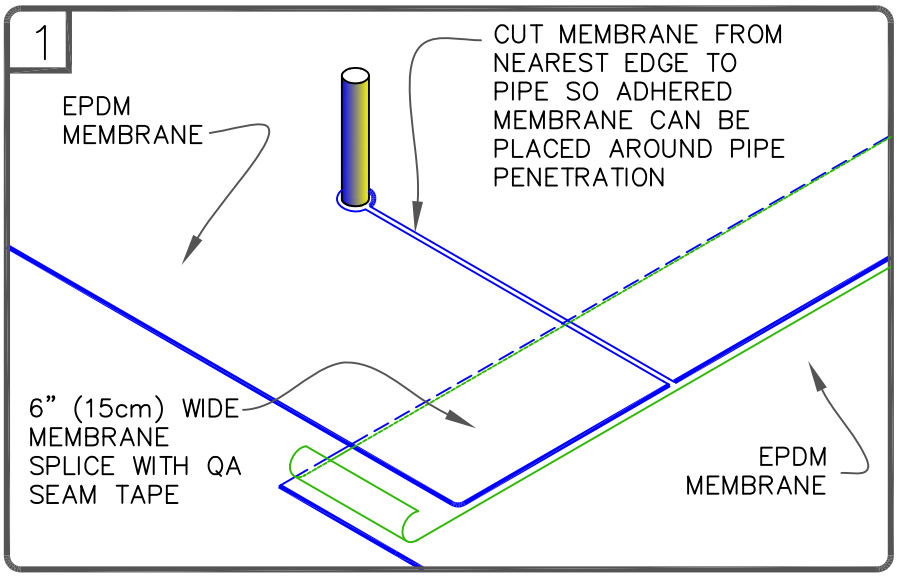

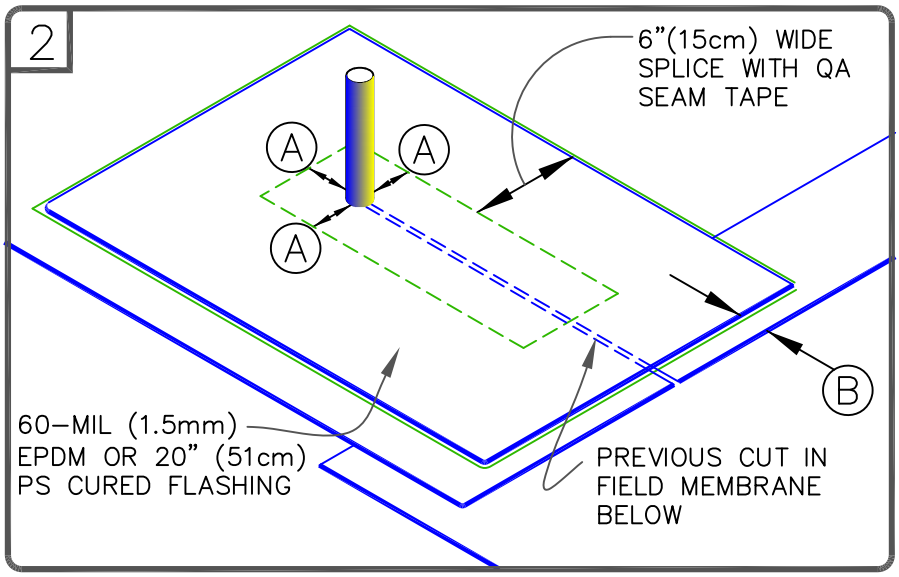

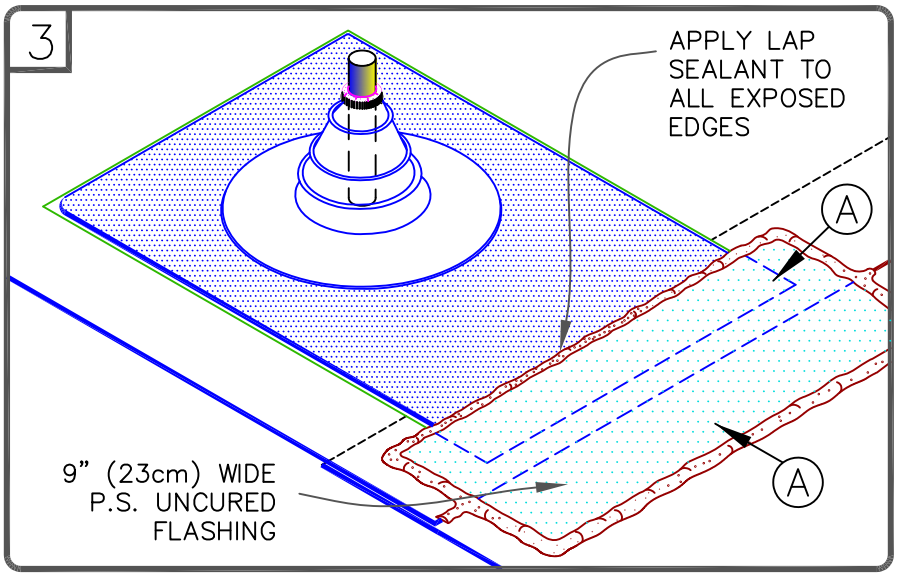

NOTES:

1. THIS DETAIL FOR USE WHEN A RELIEF CUT OR MEMBRANE SPLICE IS PRESENT AT THE PIPE SEAL. USE DETAIL VGC-8.1 WHEN NO CUT OR SPLICE IS PRESENT.
2. REMOVE ALL LEAD AND OTHER FLASHING BEFORE INSTALLING QUICK-APPLIED PIPE SEAL.
3. PIPE SEAL MUST HAVE INTACT RIB AT TOP EDGE, REGARDLESS OF PIPE DIAMETER.
4. DECK FLANGES OF THE MOLDED PIPE SEAL SHALL NOT BE OVERLAPPED, CUT OR APPLIED OVER ANY ANGLE CHANGE.
5. ON MECHANICALLY FASTENED ROOFING SYSTEMS REFER TO DETAIL VGMA-8.3.

DIMENSIONS		cm	
A	3"	7.5	MIN.
B	1"	2.5	MIN.

MAXIMUM WARRANTY: 30 YEARS

VERSICO ROOFING SYSTEMS
© 2024 VERSICO

QUICK-APPLIED PIPE SEAL WITH 90-MIL MEMBRANE OR 30 YEAR WARRANTIES

→ EPDM MEMBRANE
→ APPROVED SUBSTRATE
0 → SEE NOTE(S)

VersiGard COMMON DETAILS (EPDM)

VGC-8.1A

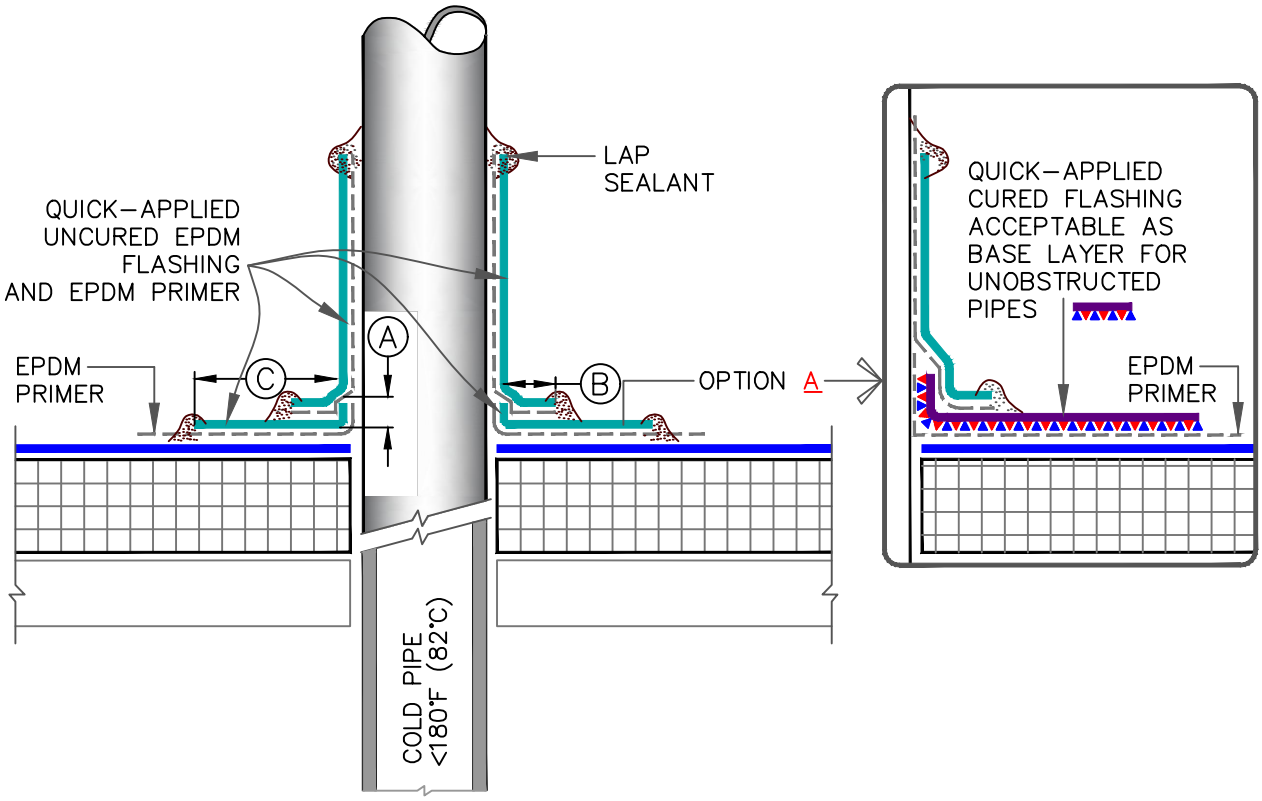

NOTES:

1. REMOVE ALL LEAD AND OTHER FLASHING BEFORE INSTALLING FIELD–FABRICATED FLASHING.
2. TEMPERATURE OF PIPE PENETRATION MUST NOT EXCEED 180°F (82°C).
3. ACCEPTABLE WITH SQUARE OR RECTANGULAR STRUCTURAL TUBING WITH ROUNDED CORNERS UP TO 12"(30cm). USE DETAIL VGC–5 IF GREATER THAN 12" (30cm).
4. IN COLDER TEMPERATURES, A HEAT GUN MUST BE USED WHEN FORMING QUICK–APPLIED UNCURED EPDM OR CURED FLASHING.
5. ON MECHANICALLY FASTENED ROOFING SYSTEMS. REFER TO DETAIL VGMA–8.2.
6. MEMBRANE SECUREMENT IS REQUIRED AROUND ALL ROUND PIPE PENETRATIONS GREATER THAN 18" (46cm) IN DIAMETER.

DIMENSIONS		cm	
A	1/2"	1.5	MIN.
B	1"	2.5	MIN.
C	3"	7.5	MIN.

MAXIMUM WARRANTY: 20 YEARS

VERSICO ROOFING SYSTEMS
© 2024 VERSICO

FIELD FABRICATED PIPE WRAP

→ EPDM MEMBRANE
→ APPROVED SUBSTRATE
0 → SEE NOTE(S)

THERMOSET ROOFING SYSTEM
VGC–8.2

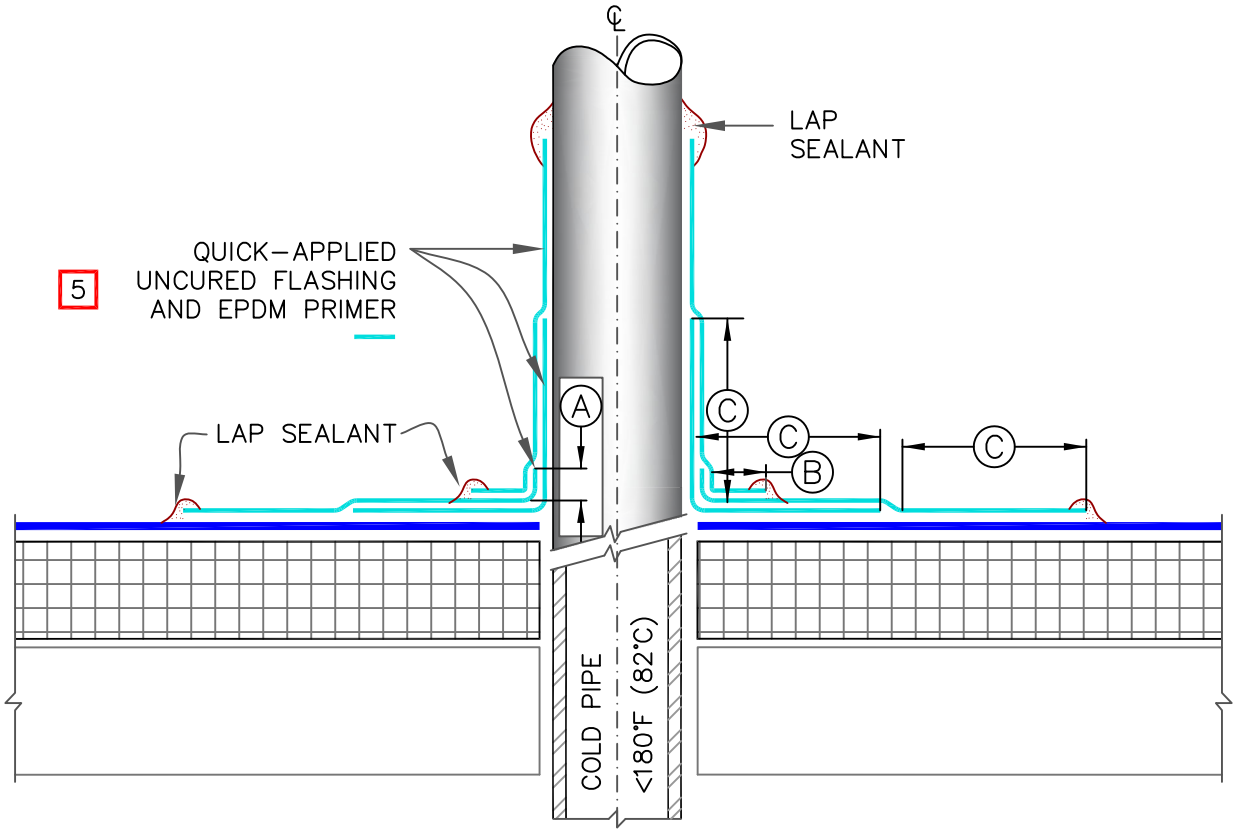

NOTES:

1. REMOVE ALL LEAD AND OTHER FLASHING BEFORE INSTALLING FIELD–FABRICATED FLASHING.
2. TEMPERATURE OF PIPE PENETRATION MUST NOT EXCEED 180°F (82°C).
3. PIPE FLASHING MAY BE USED WITH SQUARE OR RECTANGULAR STRUCTURAL TUBING WITH ROUNDED CORNERS.
4. FOR STRUCTURAL STEEL TUBING GREATER THAN 12" (30cm) ACROSS, USE DETAIL(S) VGC–5.
5. IN COLDER TEMPERATURES, A HEAT GUN MUST BE USED WHEN FORMING QUICK–APPLIED UNCURED EPDM FLASHING.
6. ON MECHANICALLY FASTENED ROOFING SYSTEMS, REFER TO DETAIL VGMA–8.2.
7. MEMBRANE SECUREMENT IS REQUIRED AROUND ALL ROUND PIPE PENETRATIONS GREATER THAN 18" (46cm) IN DIAMETER.

DIMENSIONS		cm	
A	1/2"	1.5	MIN.
B	1"	2.5	MIN.
C	3"	7.5	MIN.

MAXIMUM WARRANTY: 30 YEARS

VERSICO ROOFING SYSTEMS
© 2024 VERSICO

FIELD FABRICATED PIPE WRAP (30 YEAR WARRANTIES)

→ EPDM MEMBRANE
→ APPROVED SUBSTRATE
0 → SEE NOTE(S)

VersiGard COMMON DETAILS (EPDM)

VGC–8.2A

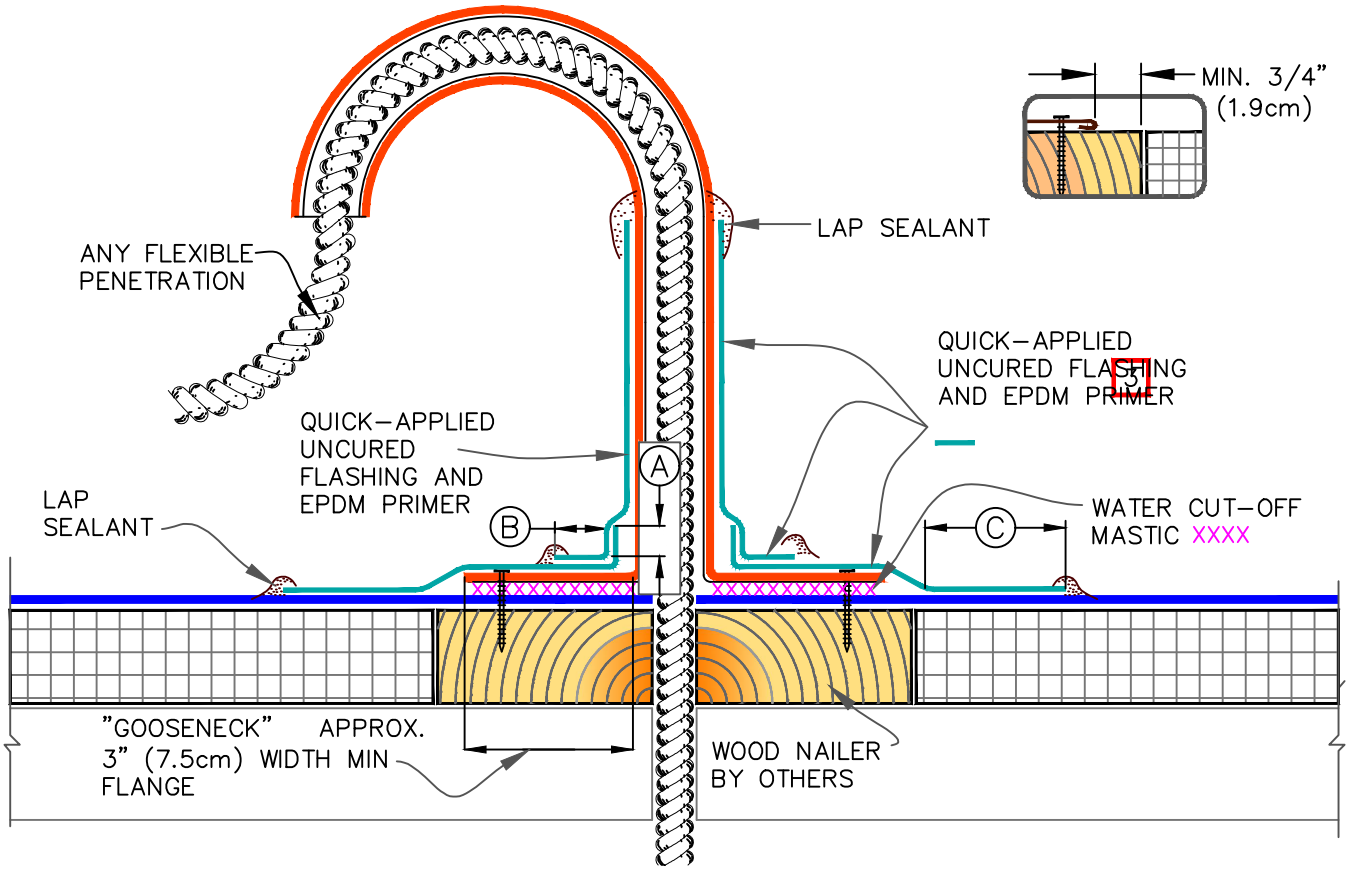

A UP TO 20-YEAR WARRANTY

NOTES:

1. REMOVE ALL LEAD AND OTHER FLASHING BEFORE INSTALLING FIELD–FABRICATED PIPE SEAL.
2. TEMPERATURE OF PENETRATION MUST NOT EXCEED 180°F (82°C).
3. IN COLDER TEMPERATURES, A HEAT GUN MUST BE USED WHEN FORMING QUICK–APPLIED UNCURED FLASHING.

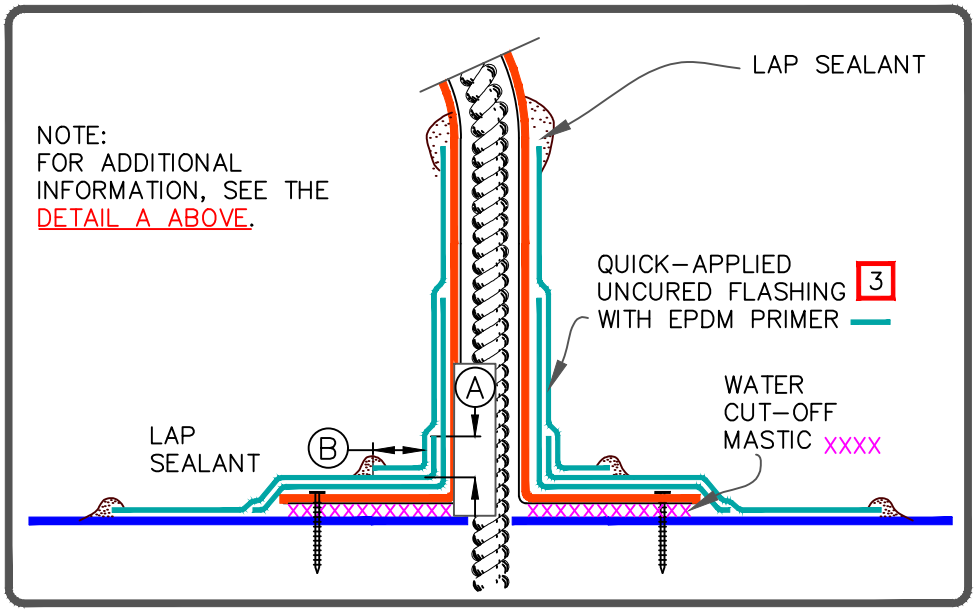

B UP TO 30-YEAR WARRANTY

DIMENSIONS		cm	
A	1/2"	1.5	MIN.
B	1"	2.5	MIN.
C	3"	7.5	MIN.

MAXIMUM WARRANTY: SEE EACH DETAIL

VERSICO ROOFING SYSTEMS
© 2024 VERSICO

FLEXIBLE PENETRATION

→ EPDM MEMBRANE
→ APPROVED SUBSTRATE
0 → SEE NOTE(S)

VersiGard COMMON DETAILS (EPDM)

VGC–8.3

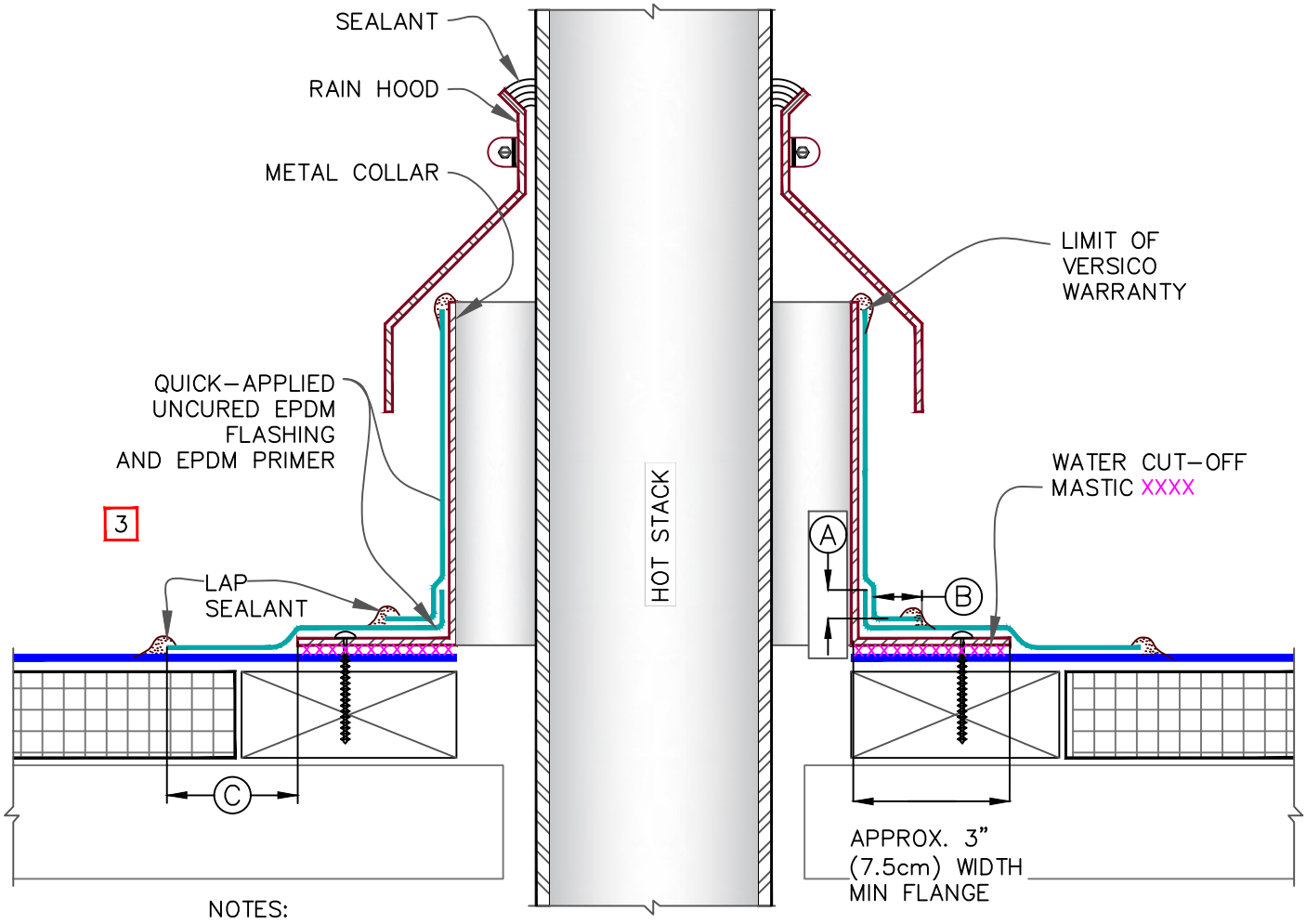

NOTES:

1. REMOVE ALL LEAD AND OTHER FLASHING BEFORE INSTALLING FIELD FABRICATED PIPE SEAL.
2. TEMPERATURE OF METAL COLLAR MUST NOT EXCEED 180°F (82°C).
3. IN COLDER TEMPERATURES, A HEAT GUN MUST BE USED WHEN FORMING QUICK–APPLIED UNCURED EPDM FLASHING.

DIMENSIONS		cm	
A	1/2"	1.5	MIN.
B	1"	2.5	MIN.
C	3"	7.5	MIN.

MAXIMUM WARRANTY: 20 YEARS

VERSICO ROOFING SYSTEMS
© 2024 VERSICO

FIELD FABRICATED HOT STACK

→ EPDM MEMBRANE
→ APPROVED SUBSTRATE
0 → SEE NOTE(S)

THERMOSET ROOFING SYSTEM

VGC–8.4

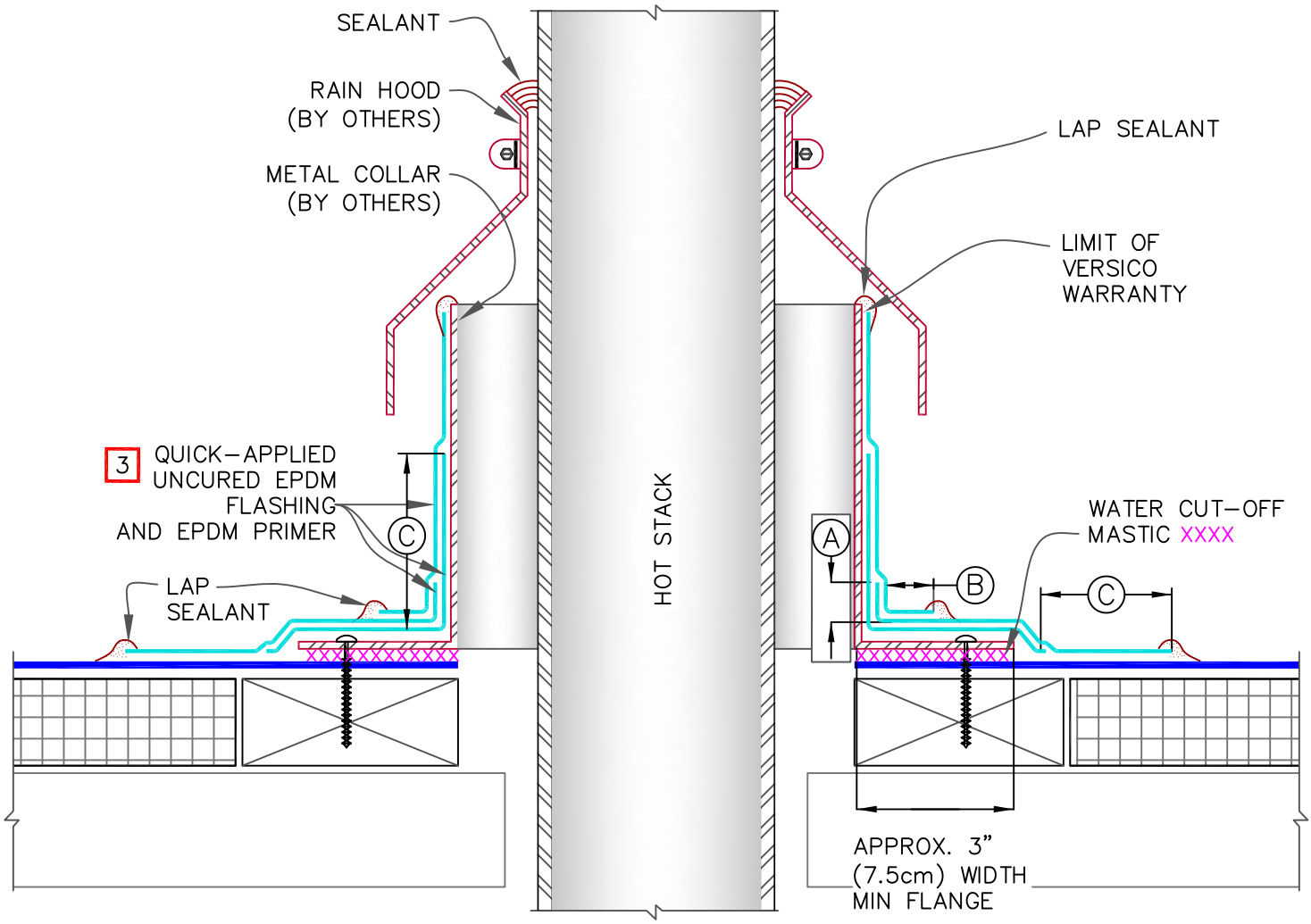

NOTES:

1. REMOVE ALL LEAD AND OTHER FLASHING BEFORE INSTALLING FIELD FABRICATED PIPE SEAL.
2. TEMPERATURE OF METAL COLLAR MUST NOT EXCEED 180°F (82°C).
3. IN COLDER TEMPERATURES, A HEAT GUN MUST BE USED WHEN FORMING QUICK–APPLIED UNCURED FLASHING.

DIMENSIONS		cm	
A	1/2"	1.5	MIN.
B	1"	2.5	MIN.
C	3"	7.5	MIN.

MAXIMUM WARRANTY: 30 YEARS

VERSICO ROOFING SYSTEMS
© 2024 VERSICO

FIELD FABRICATED HOT STACK (30 YEAR WARRANTIES)

→ EPDM MEMBRANE
→ APPROVED SUBSTRATE
0 → SEE NOTE(S)

VersiGard COMMON DETAILS (EPDM)

VGC–8.4A

9A MECHANICAL TERMINATION WITH COUNTER FLASHING

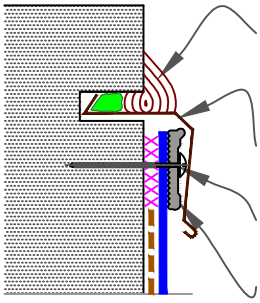

VERSICO UNIVERSAL SINGLE-PLY SEALANT OR SEALANT (BY OTHERS)

METAL COUNTER-FLASHING WITH LEAD WEDGES, AS REQUIRED (BY OTHERS).

THREADED FASTENERS OR VERSICO HP TERM BAR NAIL-IN

VERSICO TERMINATION BAR

WARRANTY UP TO 30 YEARS | **SEE INSET A**

9B MECHANICAL TERMINATION

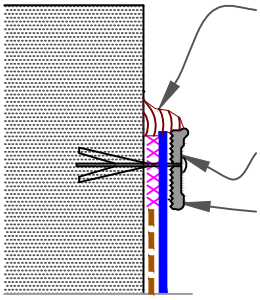

VERSICO UNIVERSAL SINGLE-PLY SEALANT OR SEALANT (BY OTHERS)

VERSICO HP TERM BAR NAIL-IN

VERSICO TERMINATION BAR

WARRANTY UP TO 20 YEARS | **SEE INSET A**

INSET A

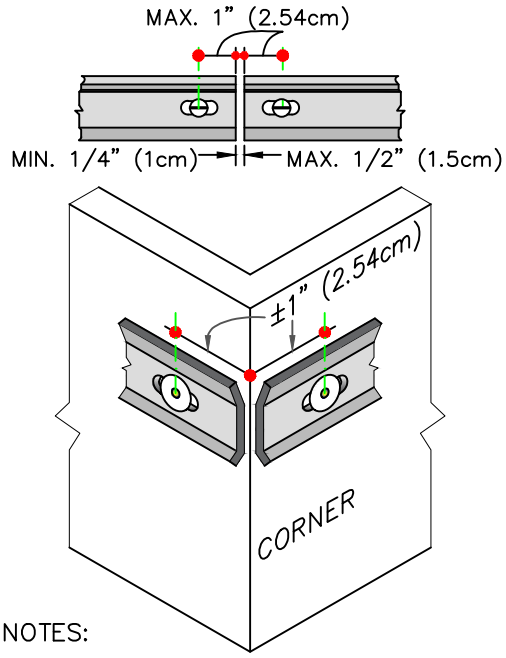

NOTES:

1. APPLY ON HARD SMOOTH SURFACE ONLY; NOT FOR USE ON EXPOSED WOOD.
2. DO NOT WRAP TERMINATION BAR AROUND CORNERS.
3. DETAIL 9D NEXT PAGE MUST BE USED AT VERTICAL JOINTS IN PANEL WALLS.

9C COUNTER FLASHING TERMINATION

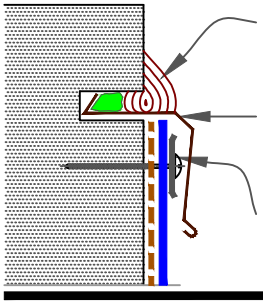

VERSICO UNIVERSAL SINGLE-PLY SEALANT OR SEALANT (BY OTHERS)

METAL COUNTER-FLASHING WITH LEAD WEDGES, AS REQUIRED (BY OTHERS).

FASTEN MEMBRANE @ 12" (30cm) O.C. MAX. USE GALVANIZED WASHERS, MIN. 1", (2.54cm) DIAMETER

NOTE:

1. WHEN MECHANICAL FASTENERS ARE USED TO PENETRATE THE METAL COUNTER-FLASHING, USE EPDM WASHERS, APPLY WATER CUT-OFF MASTIC UNDER THE COUNTER-FLASHING OR CAULK THE FASTENER HEADS.

WARRANTY UP TO 10 YEARS

APPLICABLE BONDING ADHESIVE

xxx WATER CUT-OFF MASTIC- MUST BE HELD UNDER CONSTANT COMPRESSION.

© 2024 VERSICO

MEMBRANE TERMINATIONS (PAGE 1 OF 3)
WARRANTY AS NOTED FOR EACH DETAIL

→ EPDM MEMBRANE
→ APPROVED SUBSTRATE
0 → SEE NOTE(S)

THERMOSET ROOFING SYSTEM
VGC-9.0A

9D	MECHANICAL TERMINATION AT VERTICAL JOINTS

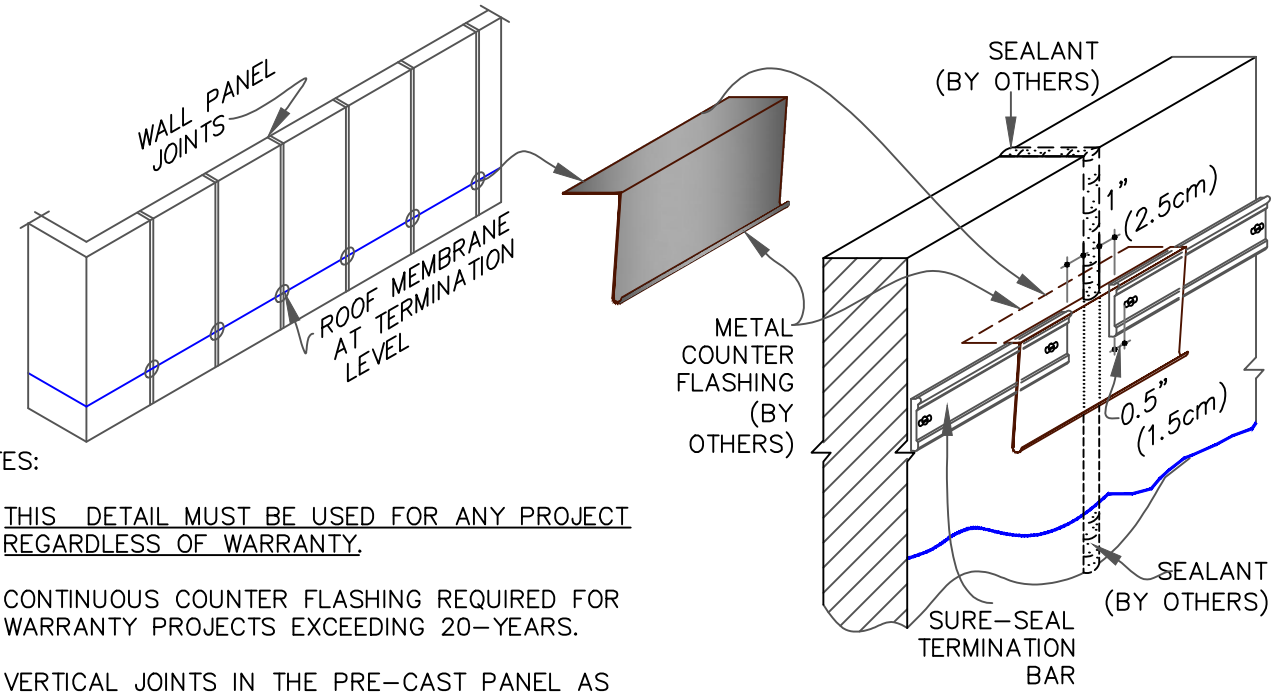

NOTES:

1. THIS DETAIL MUST BE USED FOR ANY PROJECT REGARDLESS OF WARRANTY.
2. CONTINUOUS COUNTER FLASHING REQUIRED FOR WARRANTY PROJECTS EXCEEDING 20-YEARS.
3. VERTICAL JOINTS IN THE PRE-CAST PANEL AS WELL AS ALL GAPS AT THE JUNCTION OF THE TILT-UP PANEL AND ROOF DECK MUST BE FULLY SEALED TO PREVENT AIR INFILTRATION.
4. APPLY ON HARD SMOOTH SURFACE ONLY.

9E	VERSITRIM 200 & 300 COPINGS

NOTES:

1. MEMBRANE MUST BE EXTENDED AT CORNERS TO PROVIDE COMPLETE COVERAGE OF THE TOP WALL SURFACE. SEE 3D DETAIL 9F ON PAGE 3 OF 3.
2. REFER TO VERSITRIM COPING INSTALLATION INSTRUCTION MANUAL FOR STEP-BY-STEP INSTRUCTION PROCEDURES AND WARRANTY.

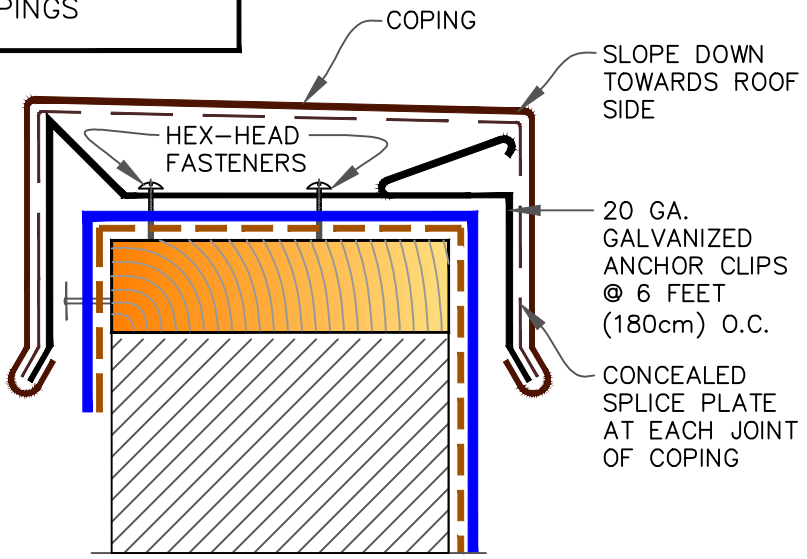

MAXIMUM WARRANTY: 30 YEARS

APPLICABLE BONDING ADHESIVE

9F	SHEET METAL COPING (BY OTHERS)

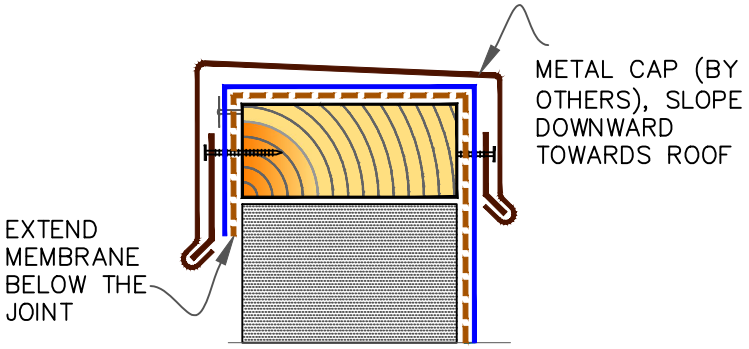

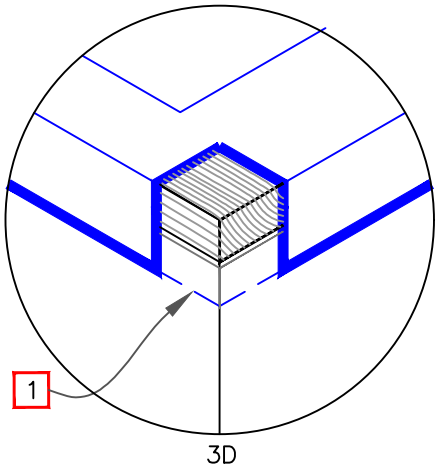

NOTES:

1. MEMBRANE MUST BE EXTENDED TO CORNERS TO PROVIDE COMPLETE COVERAGE OF THE TOP WALL SURFACE.
2. WARRANTY AS PROVIDED (BY OTHERS).

9G	MASONRY COPINGS (BY OTHERS)

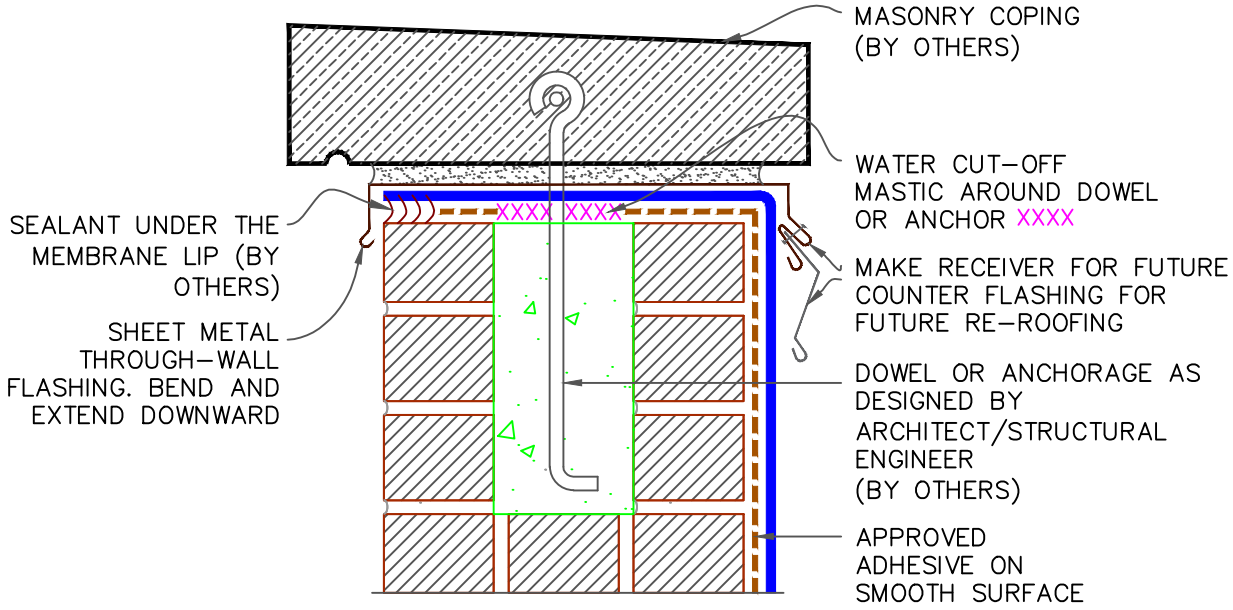

MAXIMUM WARRANTY: 30 YEARS

APPLICABLE BONDING ADHESIVE	XXX WATER CUT-OFF MASTIC- MUST BE HELD UNDER CONSTANT COMPRESSION.

VERSICO ROOFING SYSTEMS
© 2024 VERSICO

MEMBRANE TERMINATIONS (PAGE 3 OF 3)
MAXIMUM WARRANTY: 30 YEARS

→ EPDM MEMBRANE
→ APPROVED SUBSTRATE
0 → SEE NOTE(S)

THERMOSET ROOFING SYSTEM
VGC-9.0C

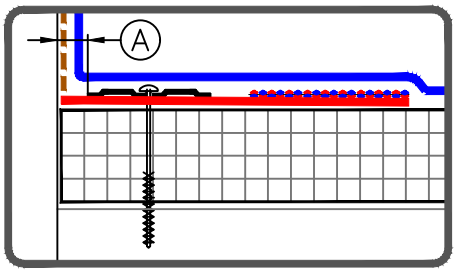

OPTIONAL: SEAM PLATE/FASTENER MAY BE INSTALLED INTO THE STRUCTURAL DECK UP TO 6" (15cm) FROM ANGLE CHANGE.

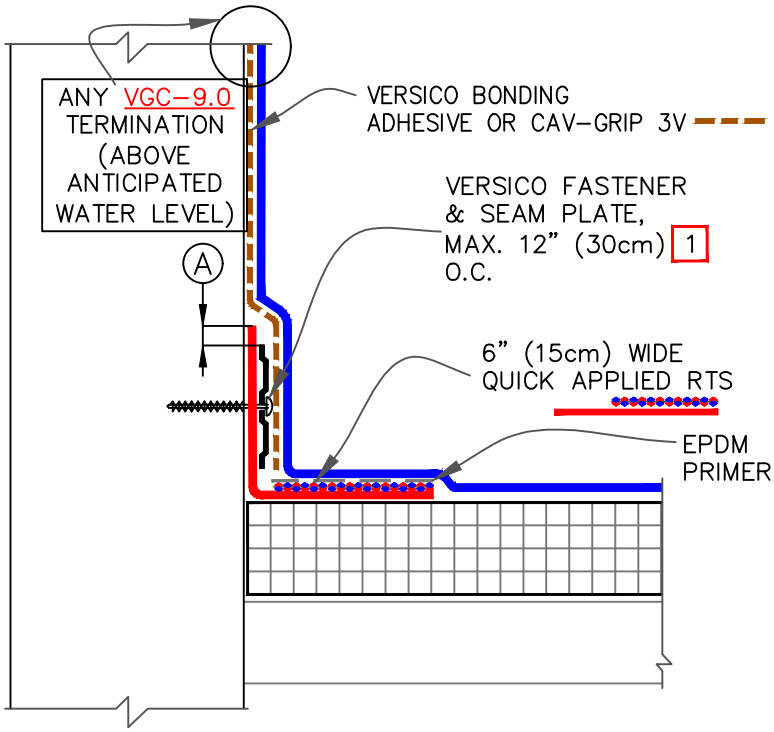

DIMENSION		cm
A	1/8"–1"	0.5–2.5

NOTES:

1. FASTENERS AND PLATES ARE REQUIRED AT 6" (15cm) O.C. FOR ADHERED SYSTEMS WITH WARRANTY WIND SPEED COVERAGE GREATER THAN 90 MPH AND FOR ALL PROJECTS WITH WARRANTIES GREATER THAN 20 YEARS. HPX FASTENERS AND POLYMER SEAM PLATES ARE REQUIRED OVER STEEL DECKS ON MECHANICALLY FASTENED SYSTEMS.
2. PROJECTS WITH 25 AND 30–YEAR WARRANTIES OR WHEN USING 90–MIL MEMBRANE. REFER TO DETAIL VGC–2.3.
3. FOR CORNERS AND RUSS APPLICATION REFER TO DETAILS VGC–15.1 OR VGC–15.2.

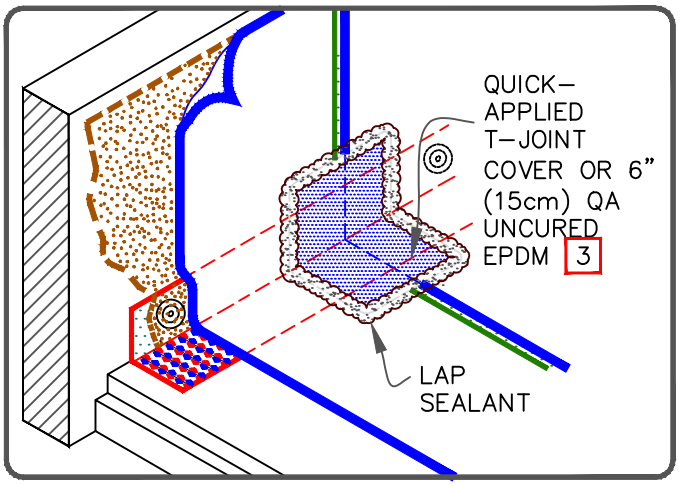

MAXIMUM WARRANTY: 30 YEARS

VERSICO ROOFING SYSTEMS
© 2024 VERSICO

PARAPET / CURB WITH CONTINUOUS MEMBRANE

→ EPDM MEMBRANE
→ APPROVED SUBSTRATE
0 → SEE NOTE(S)

THERMOSET ROOFING SYSTEM
VGC–12.1

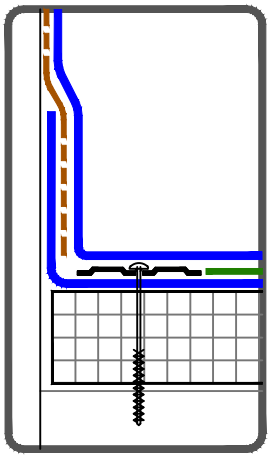

OPTIONAL: SEAM PLATE/FASTENER MAY BE INSTALLED INTO THE STRUCTURAL DECK UP TO 6" (15cm) FROM ANGLE CHANGE.

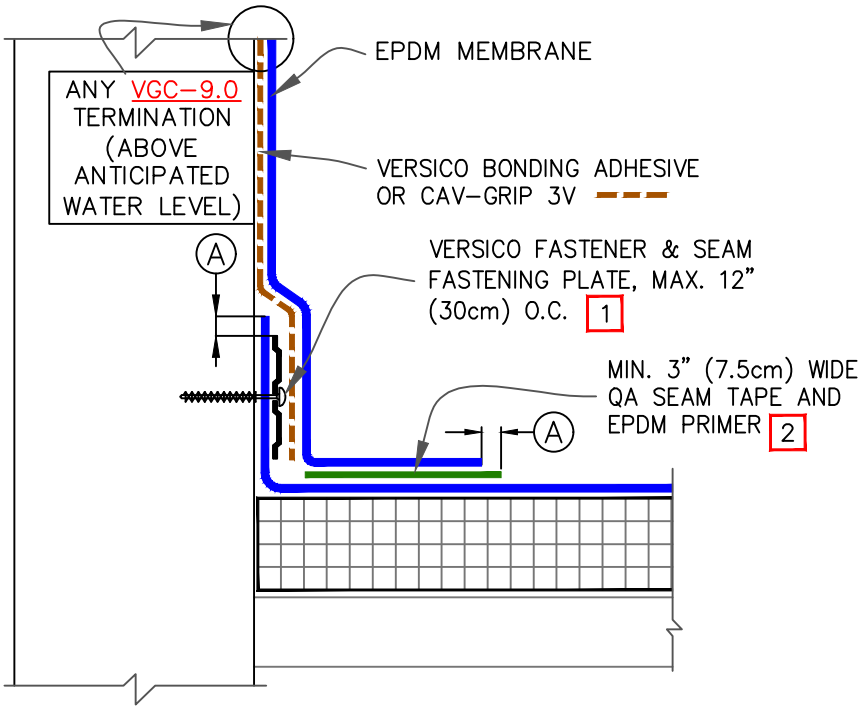

DIMENSIONS		cm	
A	1/8"	0.5	TO
	1/2"	1.5	MAX.
B	3"	7.5	

NOTES:

1. FASTENERS AND PLATES ARE REQUIRED AT 6"(15cm) O.C. FOR ADHERED SYSTEMS WITH WARRANTY WIND SPEED COVERAGE GREATER THAN 90 MPH AND FOR ALL PROJECTS WITH WARRANTIES GREATER THAN 20 YEARS. HPX FASTENERS AND POLYMER SEAM PLATES ARE REQUIRED OVER STEEL DECKS ON MECHANICALLY FASTENED SYSTEMS.

2. USE 6" (15cm) WIDE QA SEAM TAPE FOR 25/30 YEAR WARRANTIES. LAP SEALANT IS REQUIRED ON CUT EDGES OF REINFORCED MEMBRANE.

3. PROJECTS WITH 25 AND 30-YEAR WARRANTIES OR WHEN USING 90-MIL MEMBRANE, REFER TO DETAIL VGC-2.3.

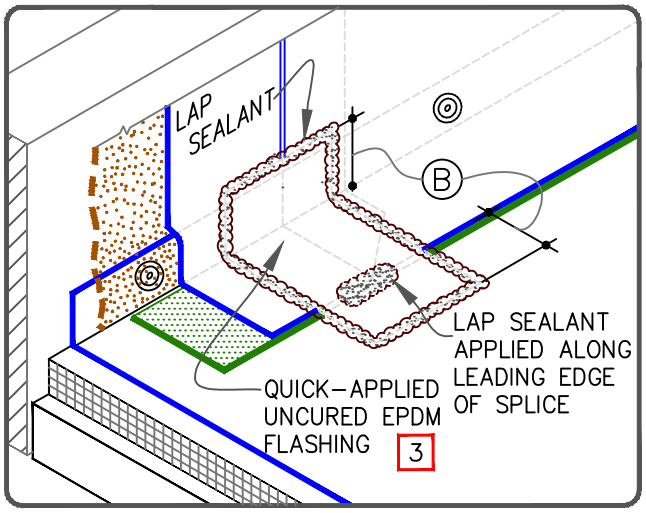

MAXIMUM WARRANTY: 30 YEARS

VERSICO ROOFING SYSTEMS
© 2024 VERSICO

PARAPET / CURB WITH SEPARATE MEMBRANE FLASHING

EPDM MEMBRANE
APPROVED SUBSTRATE
0 SEE NOTE(S)

THERMOSET ROOFING SYSTEM

VGC-12.2

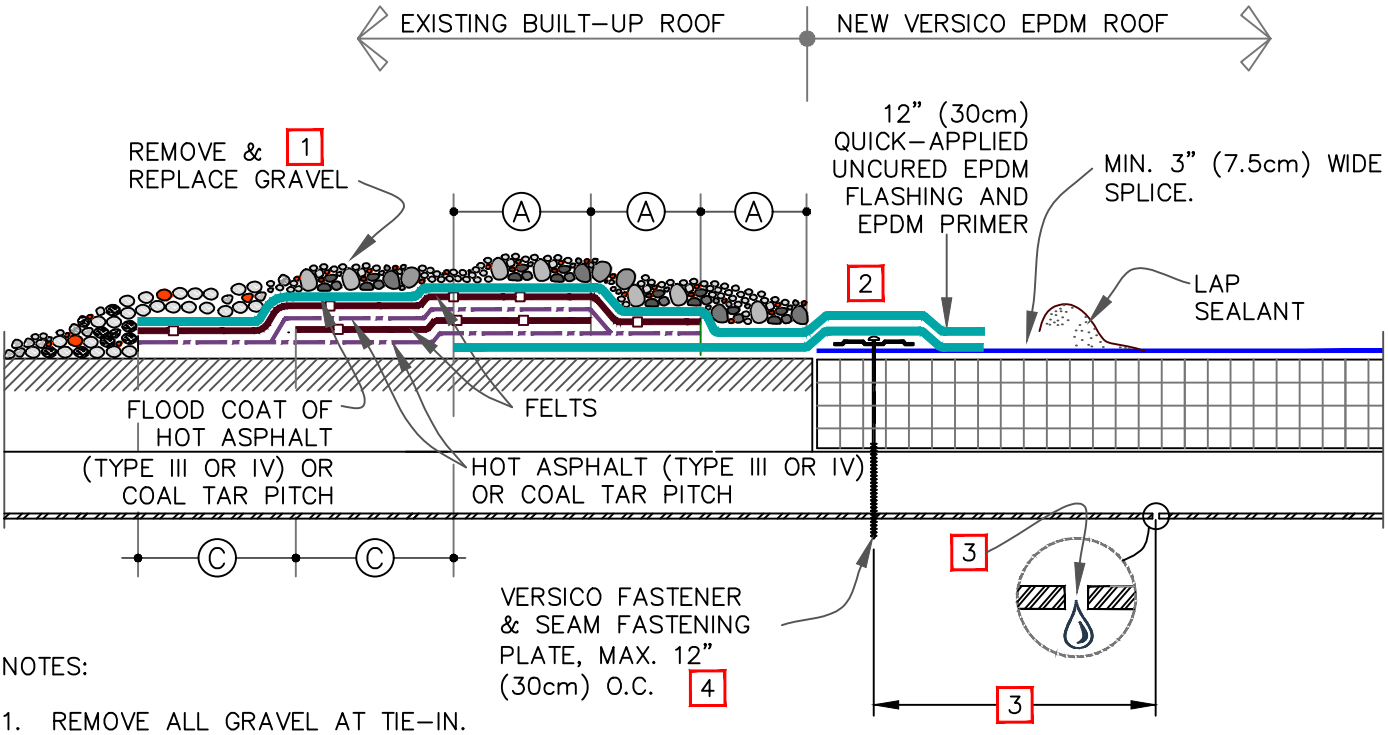

NOTES:

1. REMOVE ALL GRAVEL AT TIE-IN.
2. SPLICE TWO PIECES OF UNCURED EPDM OR QUICK-APPLIED UNCURED EPDM TOGETHER TO ACHIEVE DESIRED WIDTH.
3. IF FLUTES ARE PERPENDICULAR TO THE TIE-IN DRILL A 3/8" (1cm) DIAMETER WEEP HOLE ON THE BOTTOM FLUTES OF THE STEEL DECK ALONG THE PERIMETER TO THE TIE-IN 6" (15cm) FROM THE SEAM FASTENING PLATE.
4. ON MECHANICALLY FASTENED SYSTEMS, HPVX FASTENERS AND POLYMER SEAM PLATES ARE REQUIRED OVER STEEL DECKS.
5. IF WATER PONDS OR FLOWS OVER TIE-IN FROM BUR SURFACE, USE DETAIL VGC-13.2.
6. ON BALLASTED SYSTEMS, USE CONCRETE PAVERS TO PREVENT BALLAST MIGRATION.

DIMENSIONS		cm	
A	5"	13	MIN.
B	2"	5	± 1/2" (1.5cm)
C	6"	15	

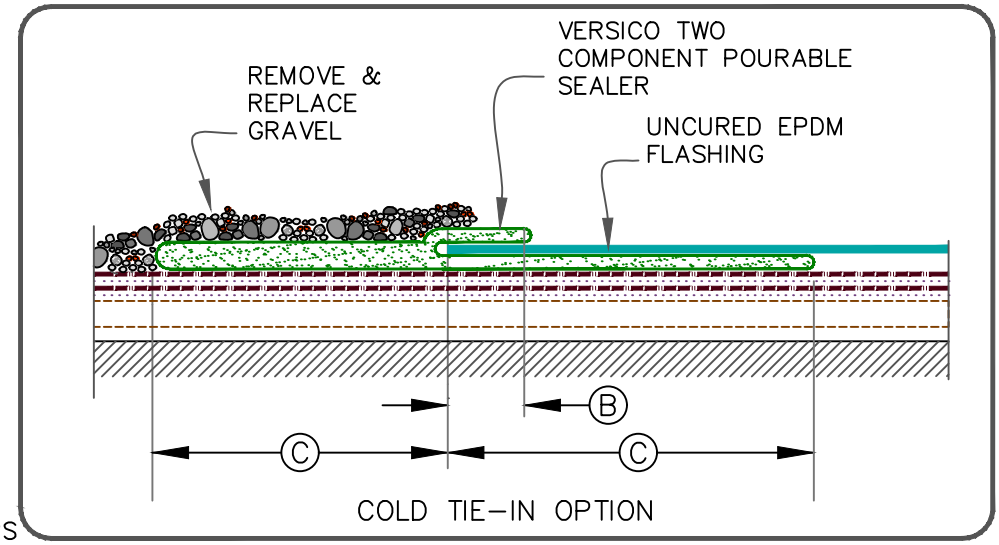

COLD TIE-IN OPTION

MAXIMUM WARRANTY: 30 YEARS

VERSICO ROOFING SYSTEMS
© 2024 VERSICO

BUILT-UP ROOFING TIE-IN OVER STEEL ROOF DECK

→ EPDM MEMBRANE
→ APPROVED SUBSTRATE
0 → SEE NOTE(S)

THERMOSET ROOFING SYSTEM

VGC-13.1

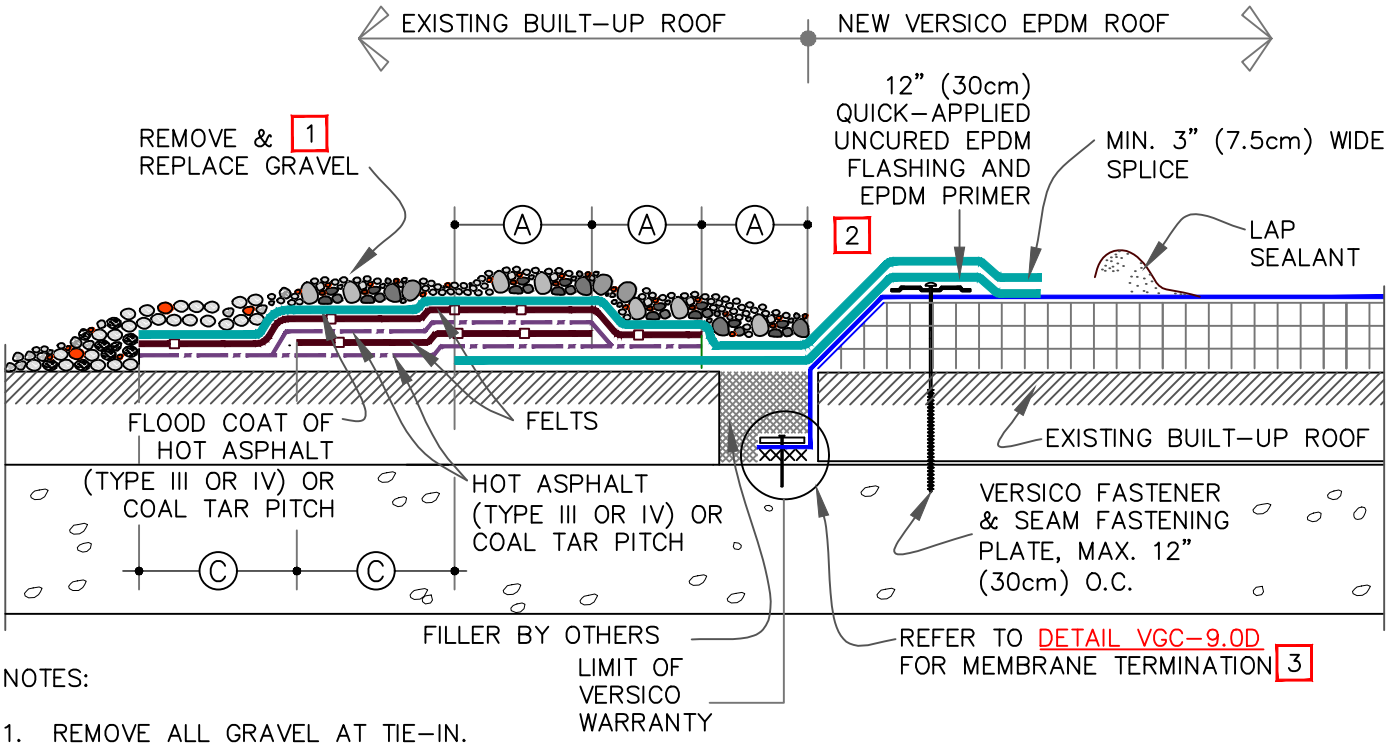

NOTES:

1. REMOVE ALL GRAVEL AT TIE-IN.
2. SPLICE TWO PIECES OF UNCURED EPDM OR QUICK-APPLIED UNCURED EPDM TOGETHER TO ACHIEVE DESIRED WIDTH.
3. WATER CUT-OFF MUST BE UNDER CONSTANT COMPRESSION.
4. VERSICO IS NOT RESPONSIBLE FOR DAMAGE TO THE BUILT-UP ROOF OR STRUCTURAL DECK RESULTING FROM PONDED WATER; THIS DETAIL APPLIES TO RE-ROOFING WHEN A TEAR-OFF IS NOT SPECIFIED AND WAS DESIGNED TO PREVENT MIGRATION OF WATER INTO THE NEW ROOFING SYSTEM.
5. ON BALLASTED SYSTEMS, USE CONCRETE PAVERS TO PREVENT BALLAST MIGRATION.

DIMENSIONS		cm	
A	5"	13	MIN.
B	2"	5	± 1/2" (1.5cm)
C	6"	15	

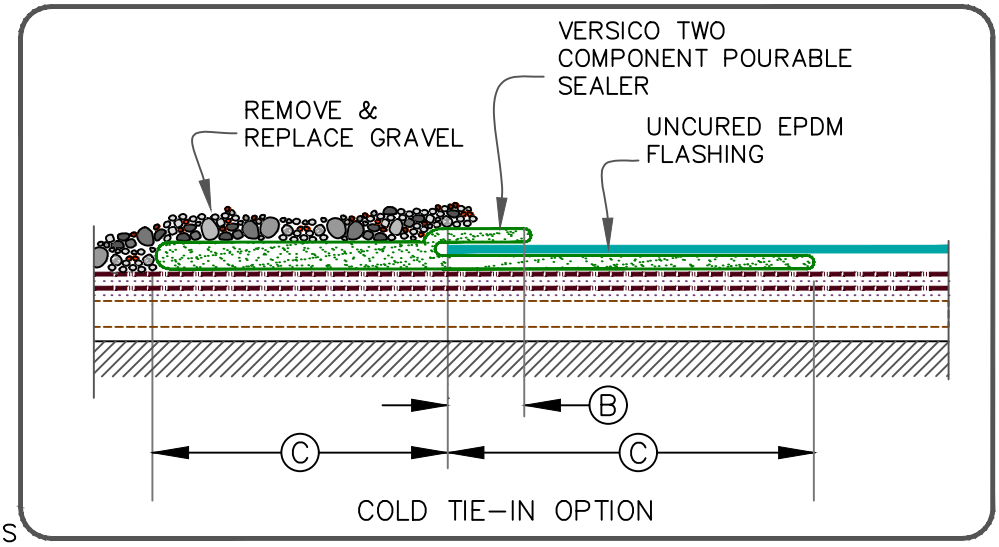

COLD TIE-IN OPTION

MAXIMUM WARRANTY: 30 YEARS

VERSICO ROOFING SYSTEMS
© 2024 VERSICO

BUILT-UP ROOFING TIE-IN OVER CONCRETE ROOF DECK

→ EPDM MEMBRANE
→ APPROVED SUBSTRATE
0 → SEE NOTE(S)

THERMOSET ROOFING SYSTEM

VGC-13.2

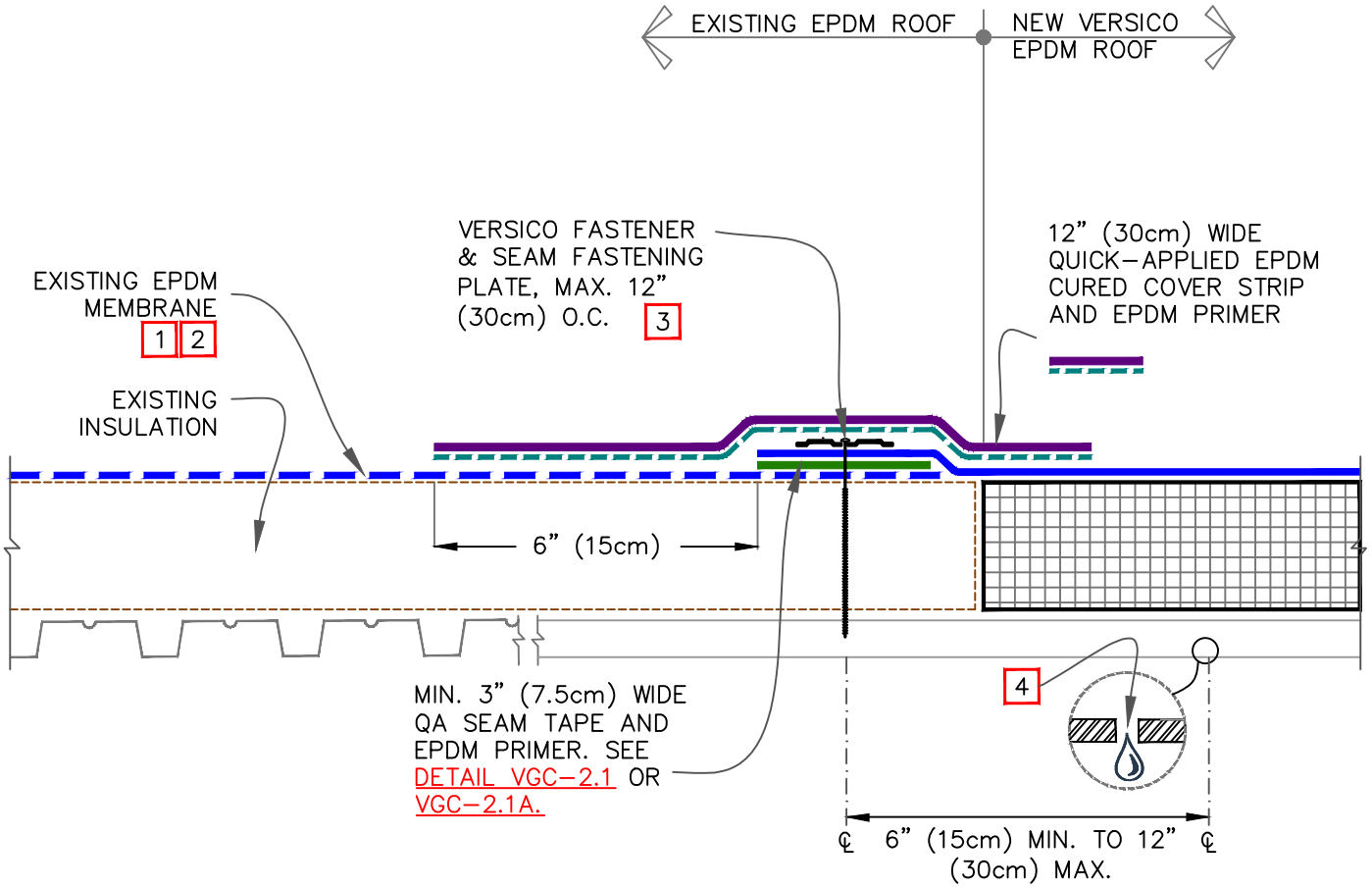

NOTES:

1. CONTACT MANUFACTURER OF EXISTING EPDM MEMBRANE ROOFING SYSTEM TO VERIFY ACCEPTANCE OF TIE-IN AND TO NOT VOID EXISTING WARRANTY.

2. PRIOR TO SPLICING, CLEAN EXISTING EPDM MEMBRANE BY SCRUBBING THE SPLICE AREA WITH WEATHERED MEMBRANE CLEANER AND ALLOW TO DRY.

3. ON MECHANICALLY FASTENED SYSTEMS, HPX FASTENERS AND POLYMER SEAM PLATES ARE REQUIRED OVER STEEL DECKS.

4. IF FLUTES ARE PERPENDICULAR TO THE TIE-IN DRILL A 3/8" (1cm) DIAMETER WEEP HOLE INTO THE BOTTOM FLUTES OF THE STEEL DECK ALONG THE PERIMETER OF THE TIE-IN 6" (15cm) MINIMUM TO 12" (30cm) MAXIMUM FROM THE SEAM FASTENING PLATE.

MAXIMUM WARRANTY: 30 YEARS

VERSICO ROOFING SYSTEMS

© 2024 VERSICO

TIE-IN TO EXISTING EPDM MEMBRANE

→ EPDM MEMBRANE
→ APPROVED SUBSTRATE
0 → SEE NOTE(S)

THERMOSET ROOFING SYSTEM

VGC-13.3

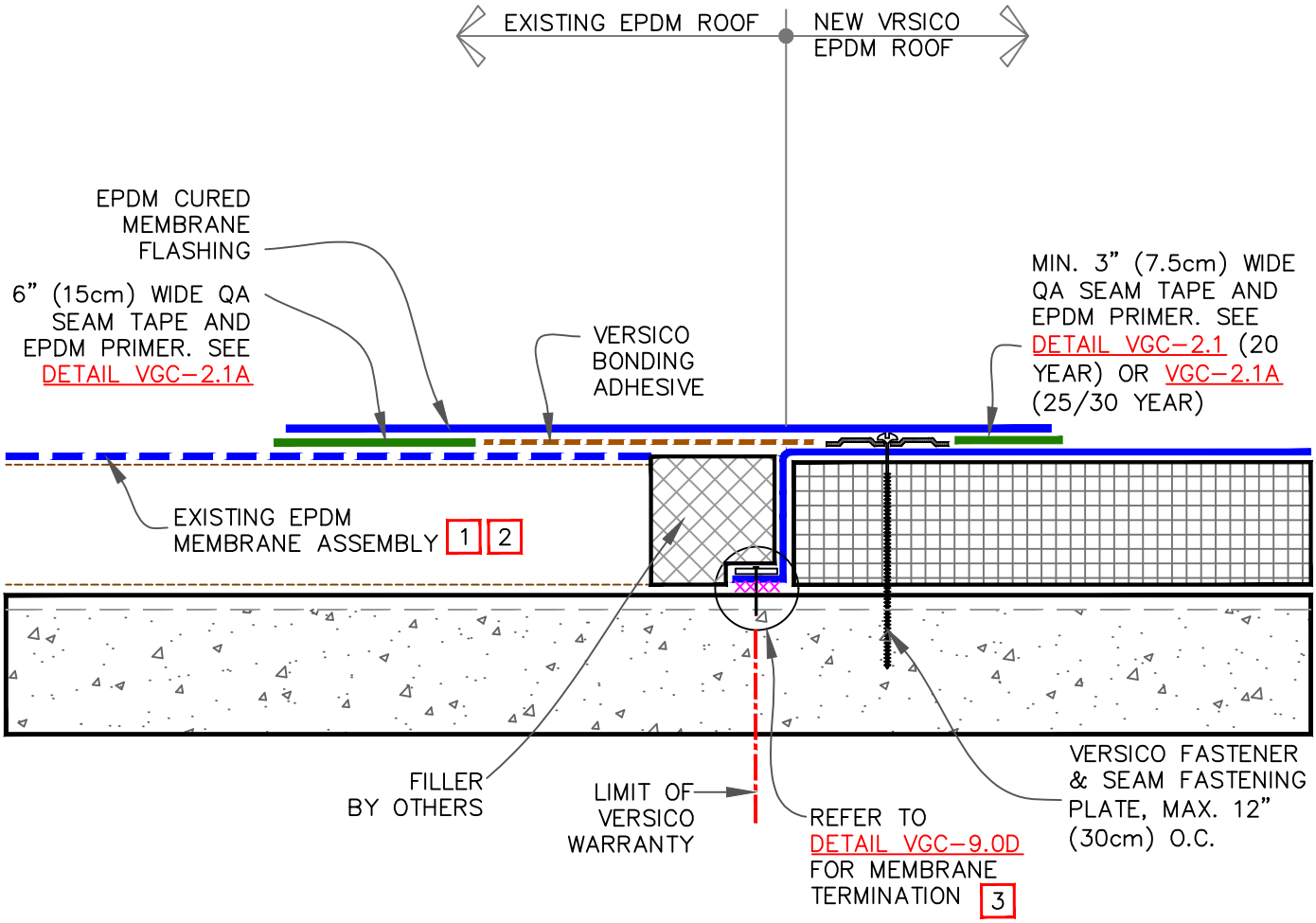

NOTES:

1. CONTACT MANUFACTURER OF EXISTING EPDM MEMBRANE ROOFING SYSTEM TO VERIFY ACCEPTANCE OF TIE-IN AND TO NOT VOID EXISTING WARRANTY.

2. PRIOR TO SPLICING, CLEAN EXISTING EPDM MEMBRANE BY SCRUBBING THE SPLICE AREA WITH WEATHERED MEMBRANE CLEANER; ALLOW TO DRY.

3. WATER CUT-OFF MASTIC MUST BE HELD UNDER CONSTANT COMPRESSION. WHEN RE-ROOFING OVER PRE-CAST CONCRETE, APPLY LIBERAL BEAD OF WATER CUT-OFF MASTIC IN THE JOINTS TO PREVENT MOISTURE MIGRATION.

MAXIMUM WARRANTY: 30 YEARS

VERSICO ROOFING SYSTEMS
© 2024 VERSICO

EPDM TIE-IN OVER CONCRETE DECK

→ EPDM MEMBRANE
→ APPROVED SUBSTRATE
0 → SEE NOTE(S)

THERMOSET ROOFING SYSTEM

VGC-13.4

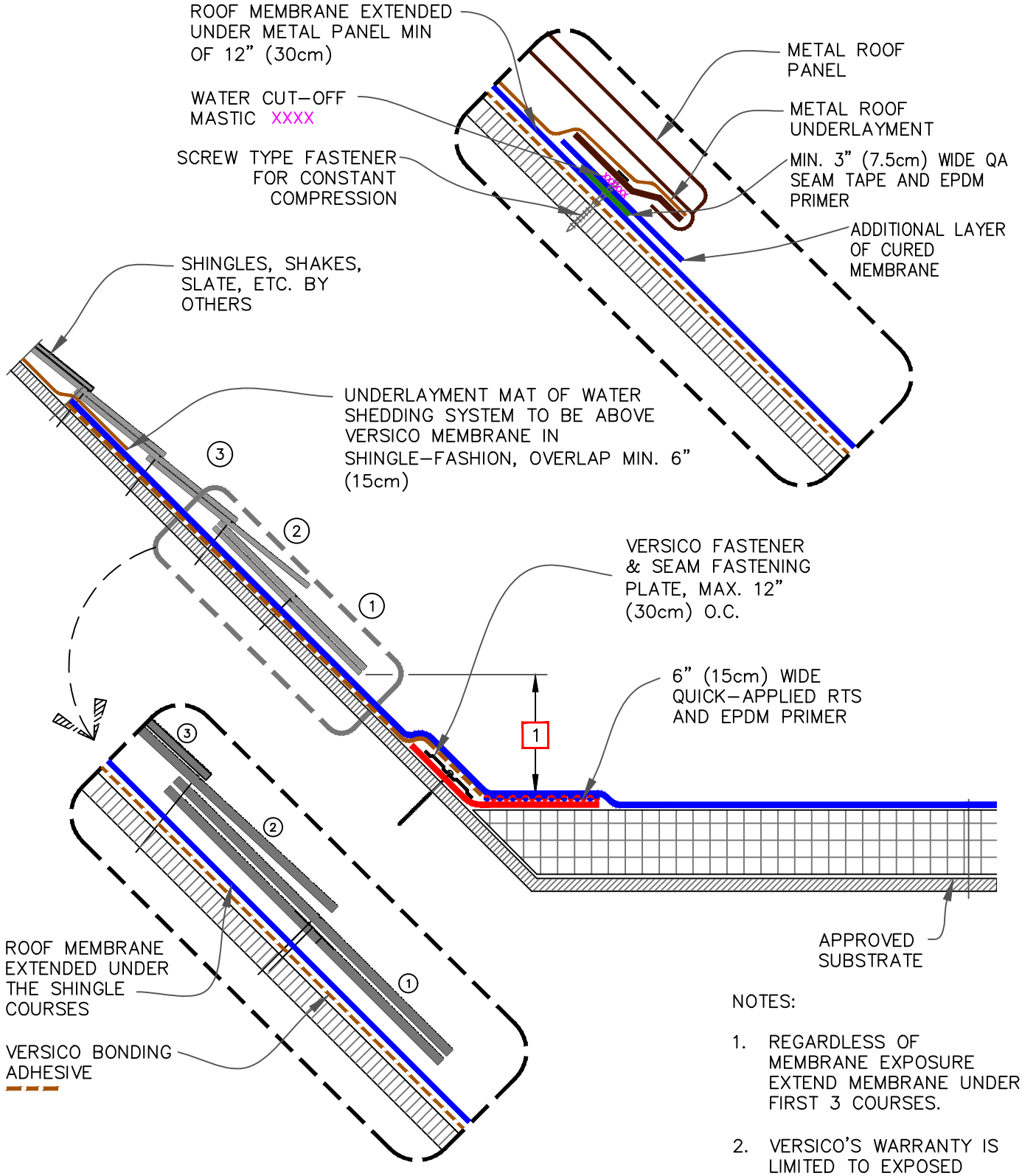

NOTES:

1. REGARDLESS OF MEMBRANE EXPOSURE EXTEND MEMBRANE UNDER FIRST 3 COURSES.

2. VERSICO'S WARRANTY IS LIMITED TO EXPOSED PORTION OF ROOF MEMBRANE.

MAXIMUM WARRANTY: 30 YEARS

VERSICO ROOFING SYSTEMS

© 2024 VERSICO

TIE-IN SHINGLED OR METAL PANEL ROOF

→ EPDM MEMBRANE

→ APPROVED SUBSTRATE

0 → SEE NOTE(S)

THERMOSET ROOFING SYSTEM

VGC-13.5

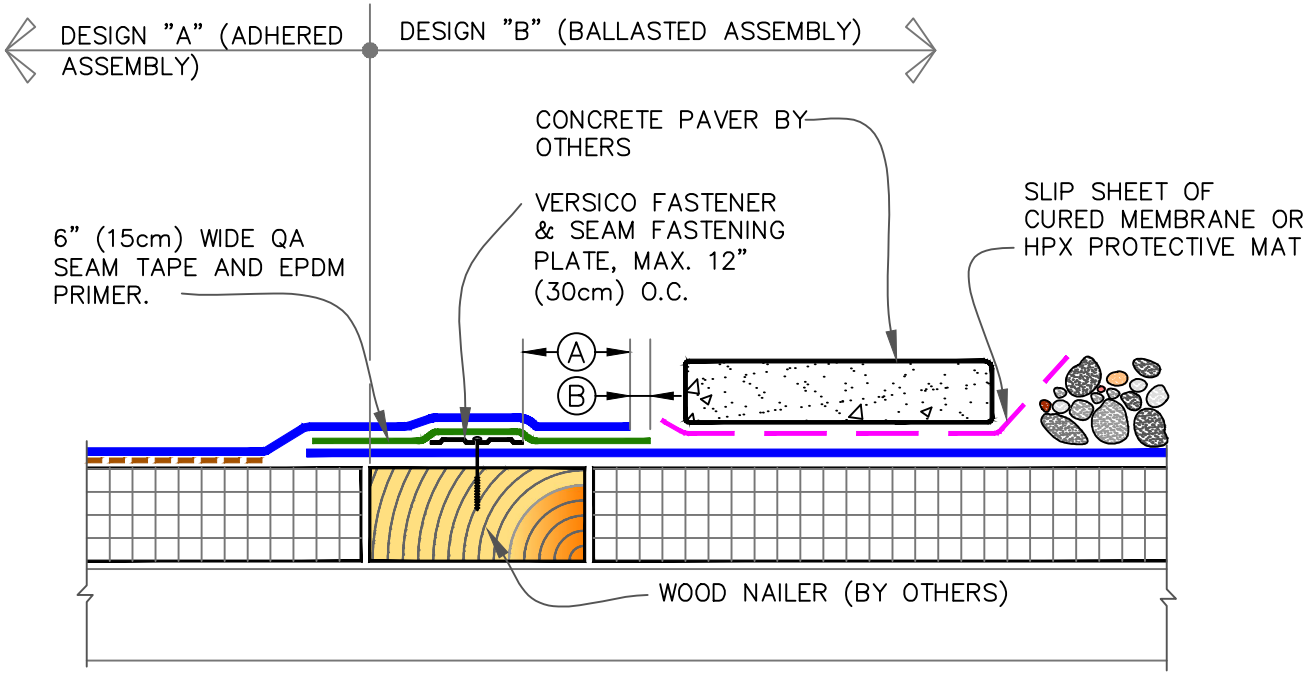

A BALLASTED TO ADHERED TIE-IN

NOTE:

1. ON MECHANICALLY ATTACHED SYSTEMS, HPX FASTENERS AND POLYMER SEAM PLATES ARE REQUIRED OVER STEEL DECKS.

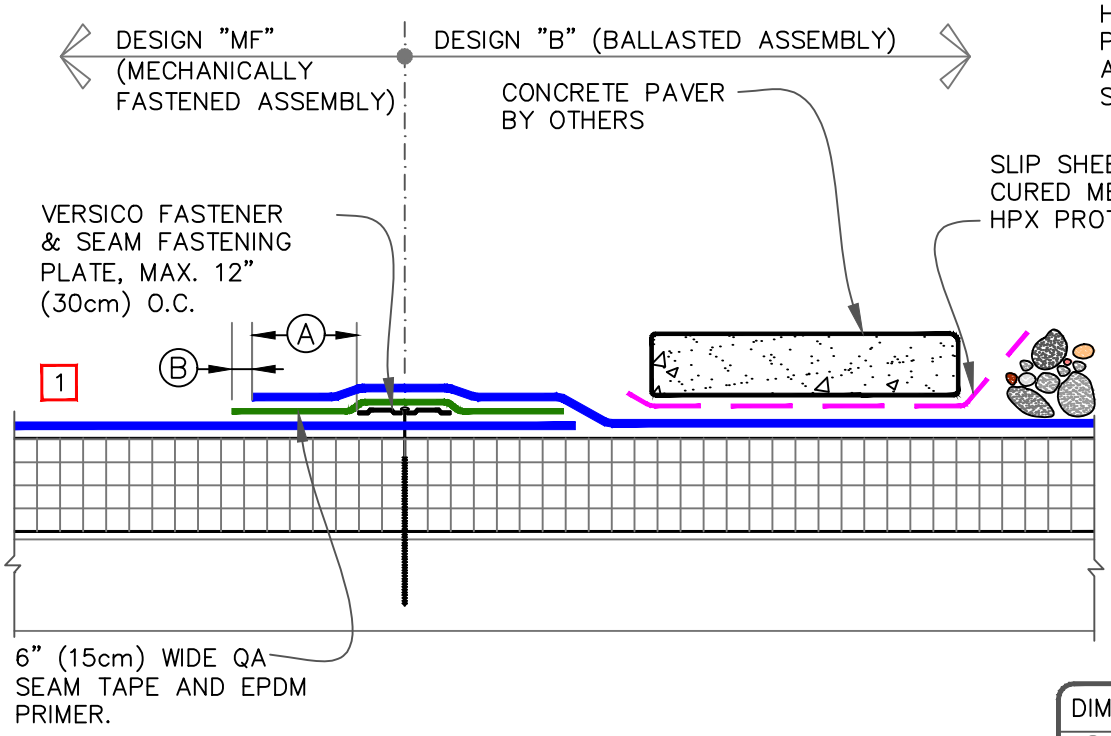

A BALLASTED TO MECHANICALLY FASTENED TIE-IN

DIMENSIONS		cm	
A	2"	5	MIN.
B	1/8"	0.5	MIN.
	1/2"	15	MAX.

MAXIMUM WARRANTY: 30 YEARS

VERSICO ROOFING SYSTEMS

© 2024 VERSICO

TIE-IN BALLASTED ROOF TO ADHERED AND MECHANICALLY FASTENED

→ EPDM MEMBRANE
→ APPROVED SUBSTRATE
0 → SEE NOTE(S)

THERMOSET ROOFING SYSTEM

VGC-13.6

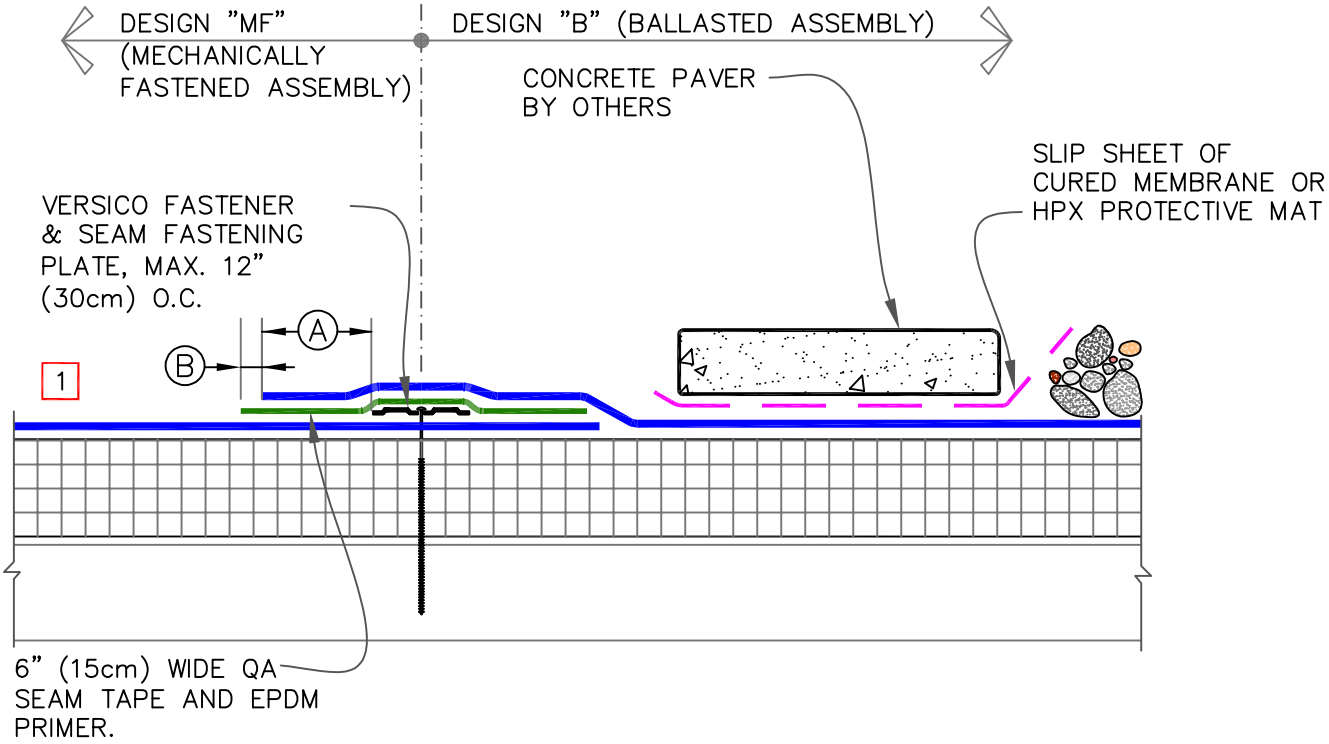

NOTE:

1. ON MECHANICALLY ATTACHED SYSTEMS, HPX FASTENERS AND POLYMER SEAM PLATES ARE REQUIRED OVER STEEL DECKS.

DIMENSIONS		cm	
A	2"	5	MIN.
B	1/8"	0.5	MIN.
	1/2"	15	MAX.

MAXIMUM WARRANTY: 30 YEARS

VERSICO ROOFING SYSTEMS
© 2023 VERSICO

TIE-IN BETWEEN NEW VERSICO MECHANICALLY ATTACHED & BALLASTED ROOF

→ EPDM MEMBRANE
→ APPROVED SUBSTRATE
0 → SEE NOTE(S)

THERMOSET ROOFING SYSTEM

VGC-13.7

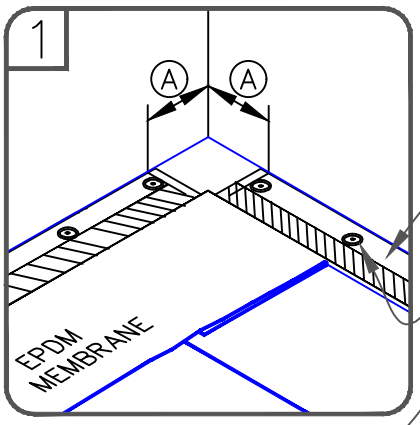

6" (15cm) WIDE QUICK–APPLIED RTS (MAY BE FASTENED INTO VERTICAL SUBSTRATE)

VERSICO SEAM PLATE & FASTENER.

EPDM PRIMER

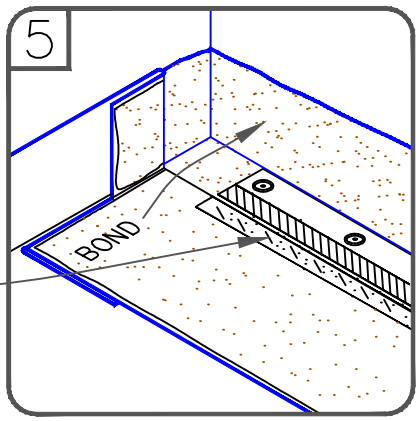

CUT 45° AND APPLY EPDM PRIMER/QA SEAM TAPE

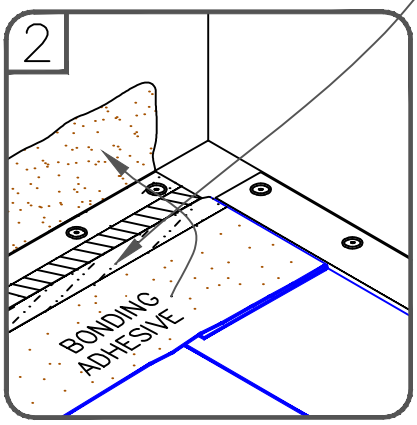

DIMENSIONS		cm	
A	6"	15	TO
	9"	23	

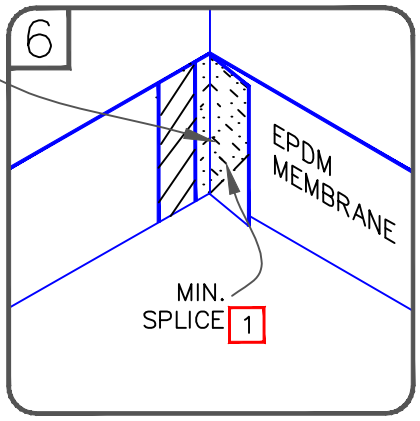

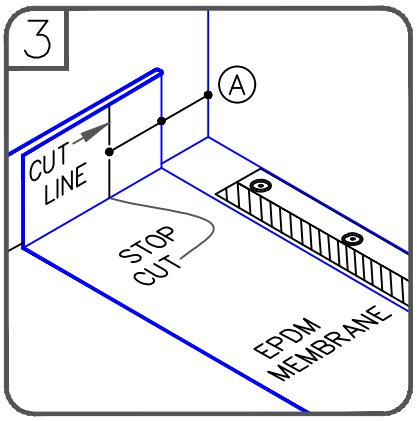

NOTE:

1. MINIMUM SPLICE WIDTH:
   1.1. 3" (7.5cm) UP TO 20 YEAR WARRANTIES
   1.2. 6" (15cm) FOR 25/30 YEAR WARRANTIES
2. REFER TO DETAIL VGC–15.3 (20 YEAR) OR VGC–15.4A (25/30 YEAR) FOR INSIDE CORNER INSTALLATION REQUIREMENTS.

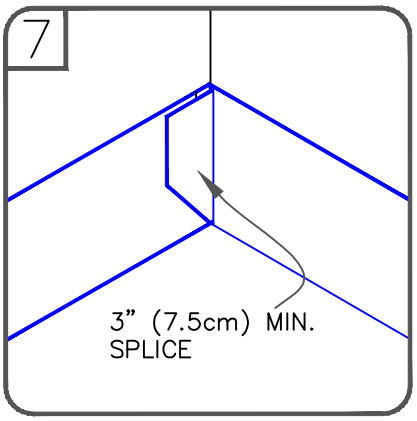

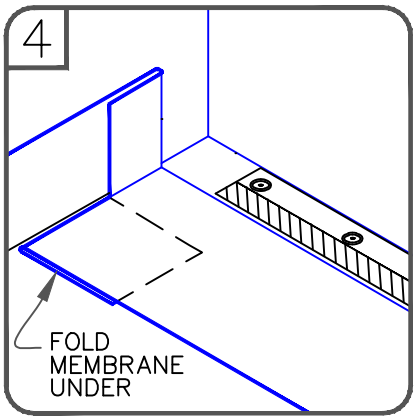

PIG EAR ON OPPOSITE WALL

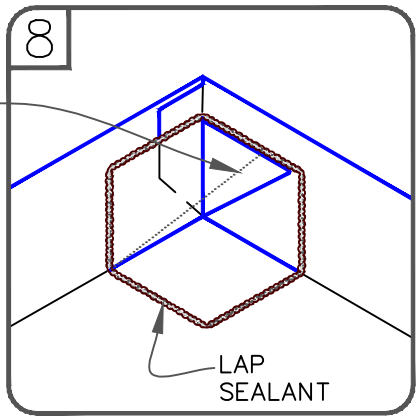

MAXIMUM WARRANTY: 30 YEARS

VERSICO ROOFING SYSTEMS
© 2024 VERSICO

INSIDE CORNER WALL FLASHING WITH RTS (OPTION 1)

→ EPDM MEMBRANE
→ APPROVED SUBSTRATE
0 → SEE NOTE(S)

THERMOSET ROOFING SYSTEM

VGC–15.1

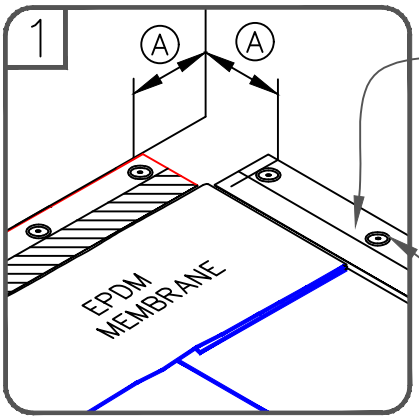

6" (15cm) WIDE QUICK-APPLIED RTS (MAY BE FASTENED INTO VERTICAL SUBSTRATE)

FORM PIG EAR WITH CONTINUOUS MEMBRANE AT CORNER AS SHOWN

VERSICO SEAM PLATE & FASTENER.

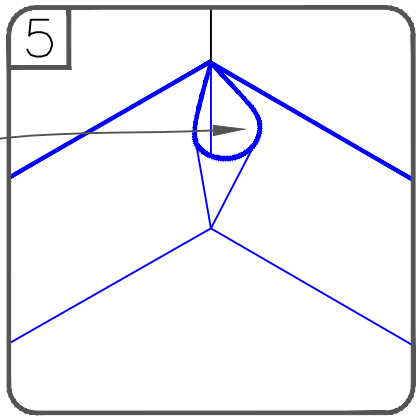

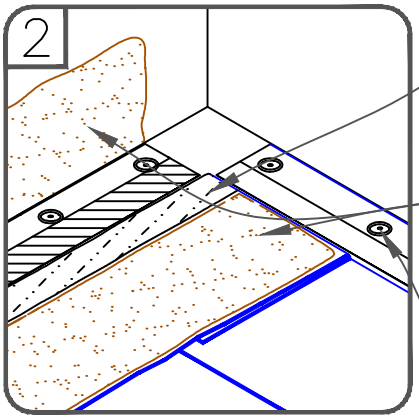

EPDM PRIMER

CUT & REMOVE EXCESSIVE MEMBRANE

VERSICO BONDING ADHESIVE

VERSICO SEAM FASTENING PLATE & FASTENER.

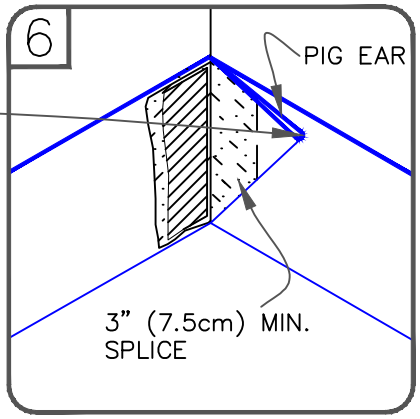

DIMENSIONS		cm	
A	6"	15	TO
	9"	23	

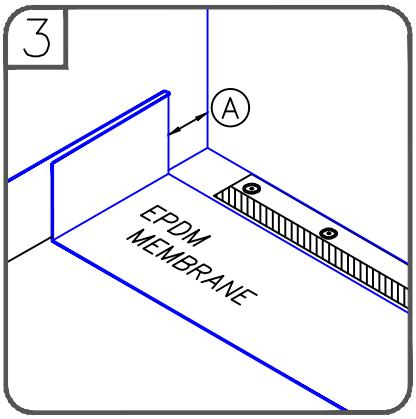

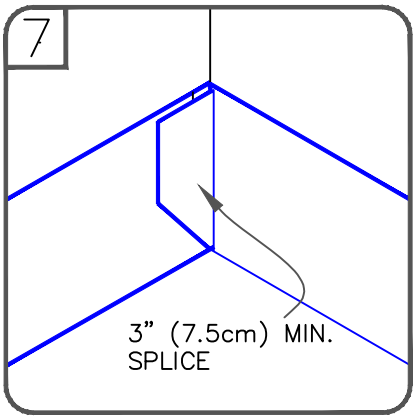

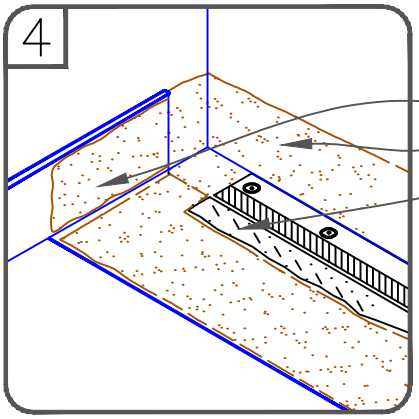

VERSICO BONDING ADHESIVE

EPDM PRIMER

6" (15cm) WIDE QUICK-APPLIED UNCURED EPDM FLASHING AND EPDM PRIMER

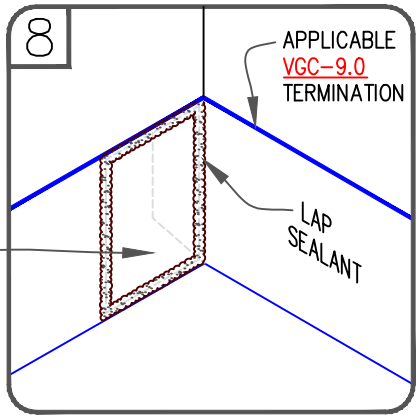

MAXIMUM WARRANTY: 30 YEARS

VERSICO ROOFING SYSTEMS
© 2024 VERSICO

INSIDE CORNER WALL FLASHING WITH RTS (OPTION 2)

→ EPDM MEMBRANE
→ APPROVED SUBSTRATE
0 → SEE NOTE(S)

THERMOSET ROOFING SYSTEM

VGC-15.2

1

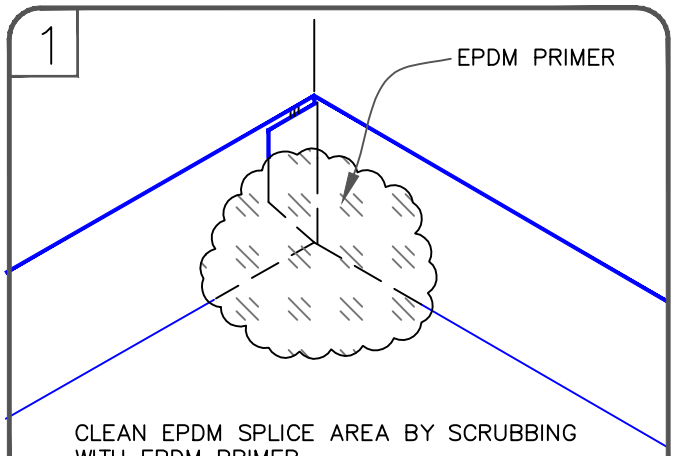

CLEAN EPDM SPLICE AREA BY SCRUBBING WITH EPDM PRIMER.

2

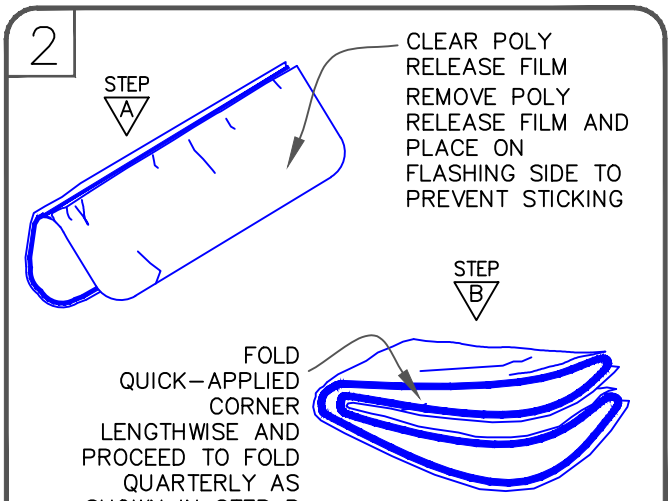

3

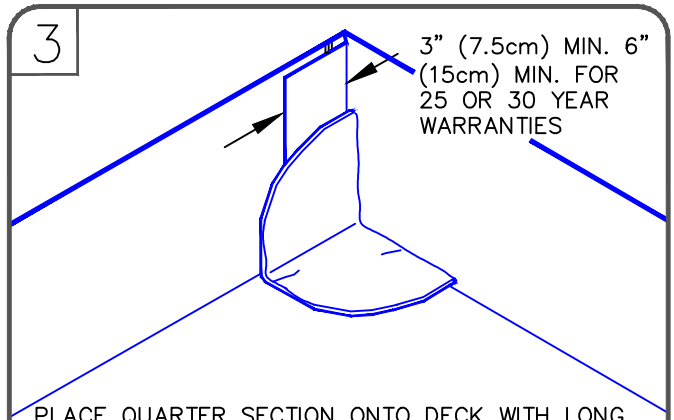

PLACE QUARTER SECTION ONTO DECK WITH LONG FOLDED SIDE FACING THE WALL. REMOVE REMAINING RELEASE PAPER. PRESS FIRMLY AND PROCEED WITH SECOND QUARTER GOING UP THE VERTICAL WALL BY PRESSING FIRMLY INTO CORNER.

4

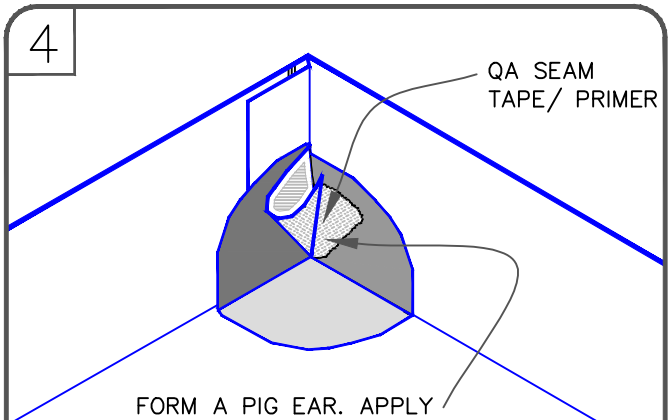

FORM A PIG EAR. APPLY PRIMER/QA SEAM TAPE TO THE PIG EAR AND ADHERE TO THE WALL.

5

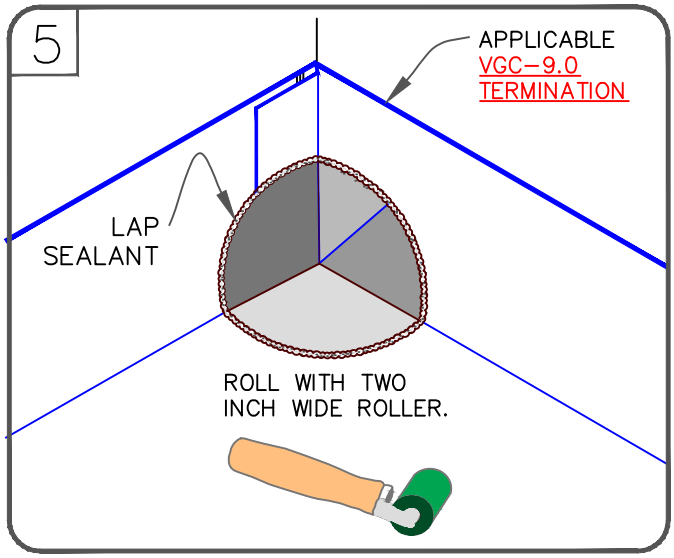

NOTES:

1. PRE-CUT 7" X 9" CORNER OR 9" X 9" QUICK-APPLIED UNCURED EPDM.
2. FOR PROJECTS WITH 25 AND 30-YEAR WARRANTIES OR WHEN USING 90-MIL MEMBRANE, INSTALL A 6" T-JOINT COVER PRIOR TO INSTALLING A 12" T-JOINT COVER. SEAL TOP LAYER WITH CONTINUOUS LAP SEALANT. PER DETAIL VGC-15.4A
3. A HEAT GUN MUST BE USED WHEN FORMING QUICK-APPLIED UNCURED EPDM FLASHING IN COLDER TEMPERATURES.

MAXIMUM WARRANTY: 30 YEARS

VERSICO ROOFING SYSTEMS
© 2024 VERSICO

INSIDE CORNER WITH CONTINUOUS EPDM WALL FLASHING

→ EPDM MEMBRANE
→ APPROVED SUBSTRATE
0 → SEE NOTE(S)

THERMOSET ROOFING SYSTEM

VGC-15.3

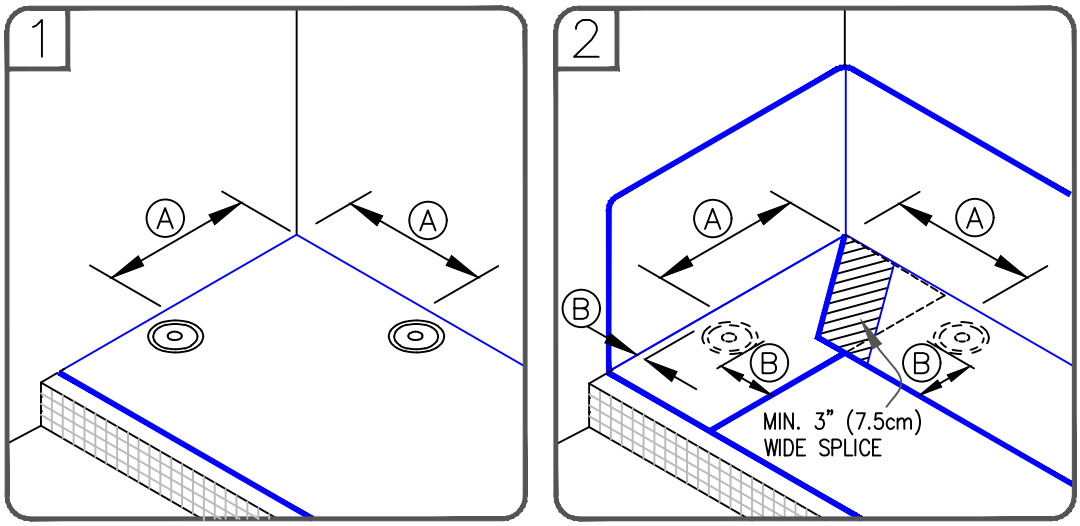

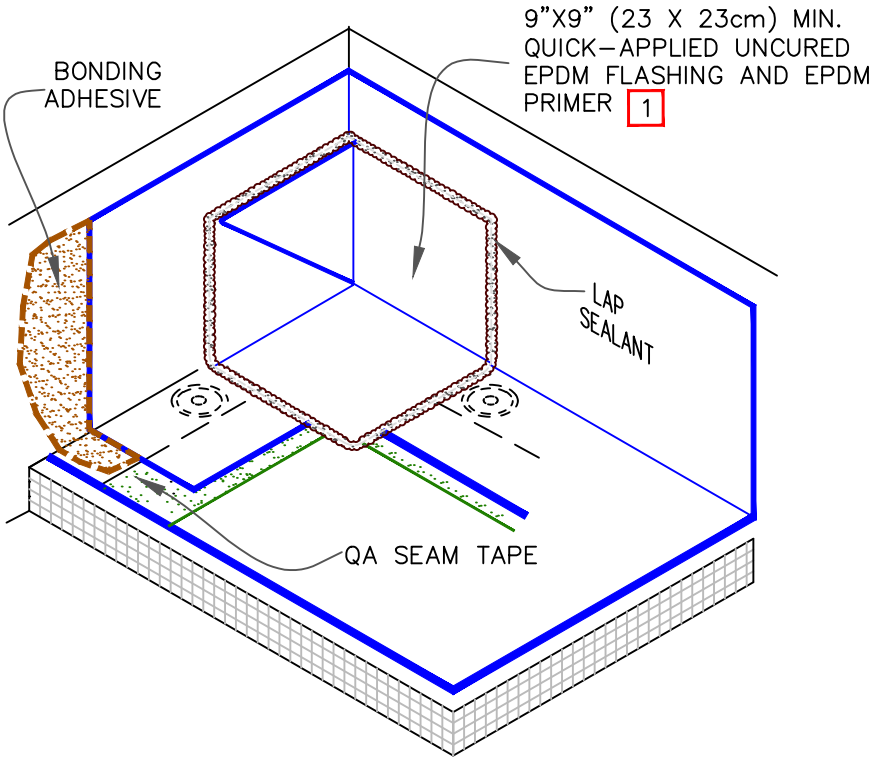

DIMENSIONS		cm	
A	6"	15	TO
	9"	23	
B	3"	7.5	

NOTES:

1. A HEAT GUN MUST BE USED WHEN FORMING QUICK-APPLIED UNCURED EPDM FLASHING IN COLDER TEMPERATURES.
2. FOR PROJECTS WITH 25 & 30-YEAR WARRANTIES OR WHEN USING 90-MIL MEMBRANE, REFER TO DETAIL VGC-15.4A FOR REQUIRED FLASHING ENHANCEMENTS.

MAXIMUM WARRANTY: 20 YEARS

VERSICO ROOFING SYSTEMS
© 2024 VERSICO

INSIDE CORNER WITH SEPARATE EPDM WALL FLASHING

→ EPDM MEMBRANE
→ APPROVED SUBSTRATE
0 → SEE NOTE(S)

THERMOSET ROOFING SYSTEM

VGC-15.4

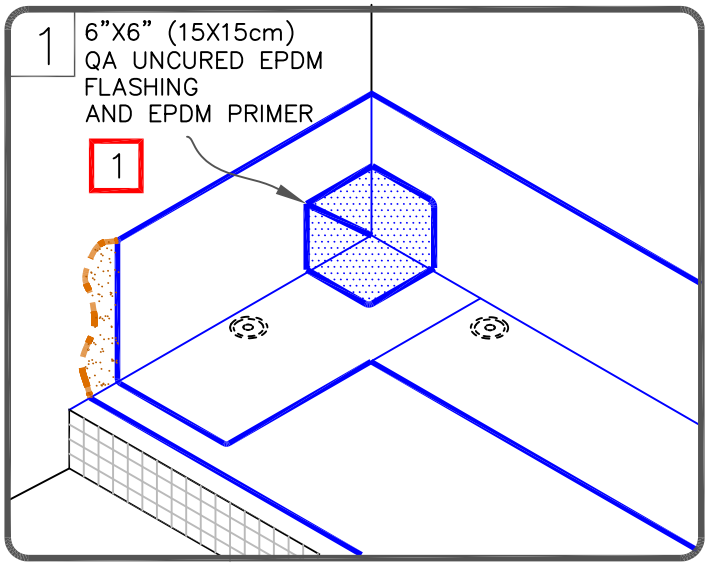

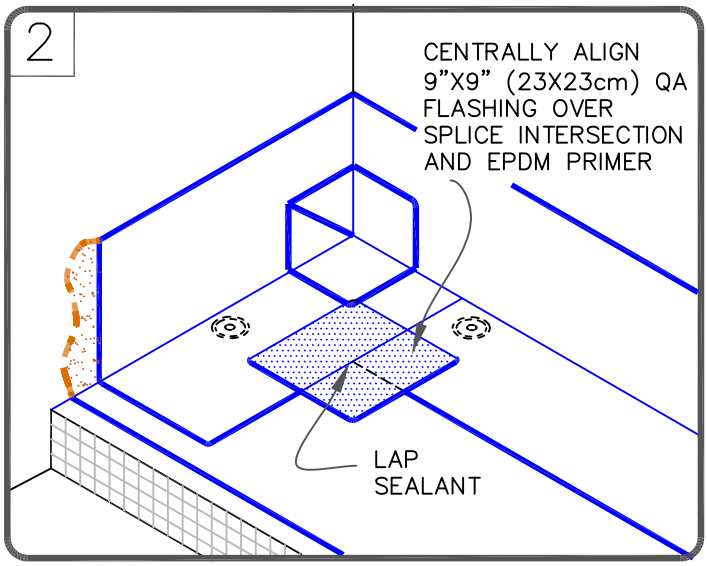

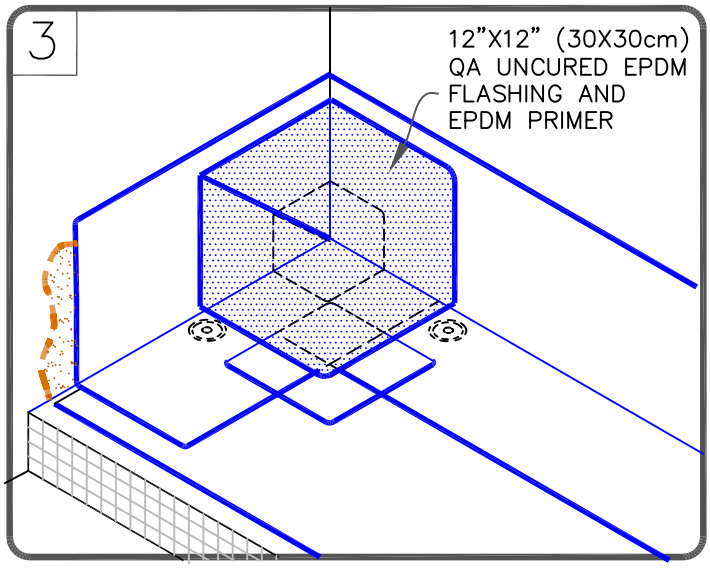

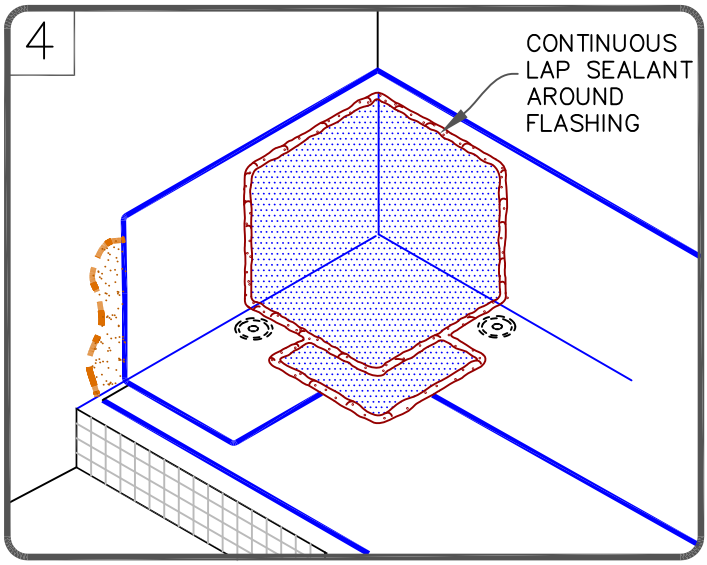

NOTES:

1. A 7"X9" (17.5cm X 23cm) QUICK–APPLIED PRE–CUT INSIDE/OUTSIDE CORNER MAY BE CUT DOWN TO 6" X 6" (7.5cm X 7.5cm).
2. A HEAT GUN MUST BE USED WHEN FORMING QUICK–APPLIED UNCURED EPDM FLASHING IN COLDER TEMPERATURES.
3. APPLY PRIMER AND QA SEAM TAPE TO ADHERE PIG EAR TO THE WALL.

MAXIMUM WARRANTY: 30 YEARS

VERSICO ROOFING SYSTEMS
© 2024 VERSICO

INSIDE CORNER FLASHING FOR PROJECTS WITH 90–MIL MEMBRANE OR 30 YEAR WARRANTIES

→ EPDM MEMBRANE
→ APPROVED SUBSTRATE
0 → SEE NOTE(S)

VersiGard COMMON DETAILS (EPDM)

VGC–15.4A

1

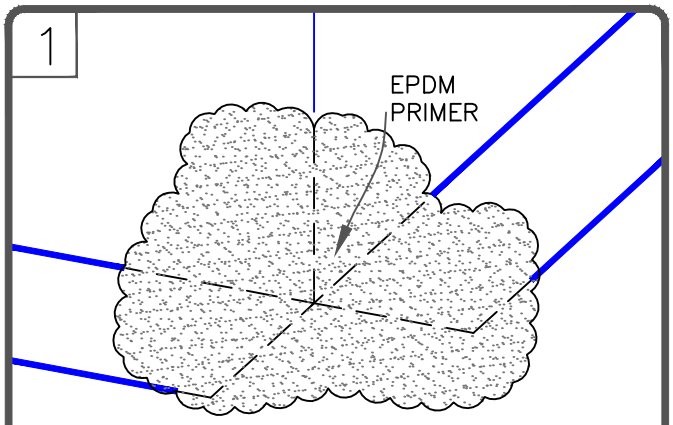

CLEAN EPDM SPLICE AREA PRIOR TO APPLYING EPDM PRIMER.

2

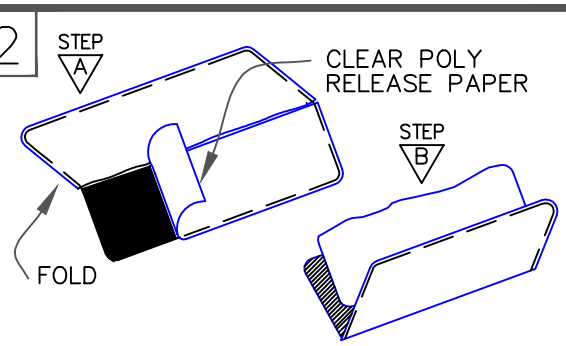

PRIOR TO PLACEMENT OF SURE-SEAL CORNER, PEEL OFF THE BLUE POLY RELEASE FILM AND HEAT THE FLASHING SIDE WITH A HEAT GUN. RE-APPLY THE POLY LOOSELY. FOLD THE FLASHING IN HALF.

3

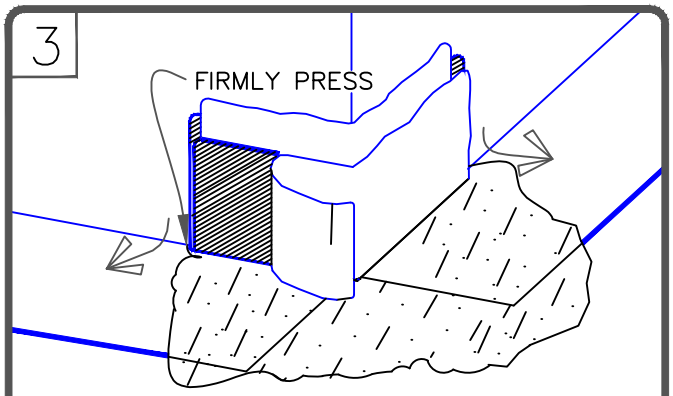

PLACE VERSIGARD INSIDE/OUTSIDE CORNER AS SHOWN AND REMOVE RELEASE PAPER. PRESS FOLDED FLASHING TIGHTLY INTO ANGLE CHANGE AND FIRMLY PRESS FLASHING AGAINST THE VERTICAL SURFACE.

4

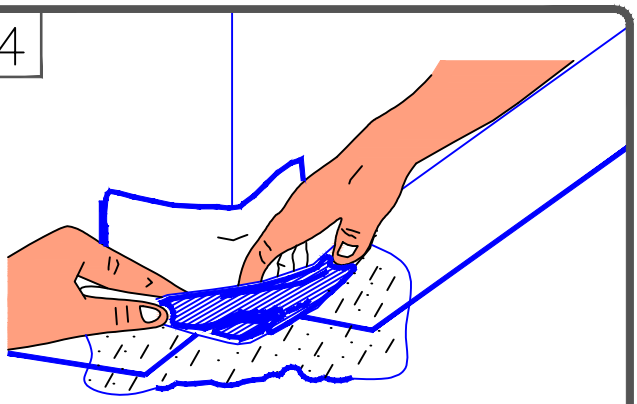

PLACE FOLDED FLASHING TIGHTLY INTO ANGLE CHANGE AND FIRMLY PRESS FLASHING ONTO THE DECK FLANGE BY PRESSING THE FLASHING AGAINST THE HORIZONTAL SURFACE.

5

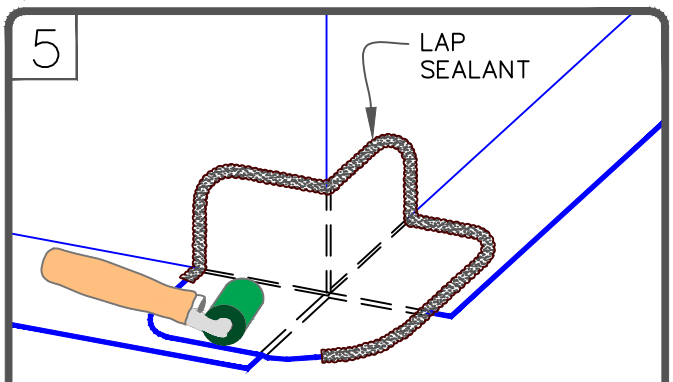

ROLL WITH A TWO INCH WIDE ROLLER. PAY PARTICULAR ATTENTION TO THE STEP OFFS AND ANGLE CHANGE.

NOTE:

FOR PROJECTS WITH 25 & 30-YEAR WARRANTIES OR WHEN USING 90-MIL MEMBRANE, REFER TO DETAIL VGC-15.7A FOR REQUIRED FLASHING ENHANCEMENTS.

MAXIMUM WARRANTY: 20 YEARS

VERSICO ROOFING SYSTEMS
© 2024 VERSICO

OUTSIDE CORNER WITH PRE-CUT QUICK-APPLIED CORNER

→ EPDM MEMBRANE
→ APPROVED SUBSTRATE
0 → SEE NOTE(S)

THERMOSET ROOFING SYSTEM

VGC-15.5

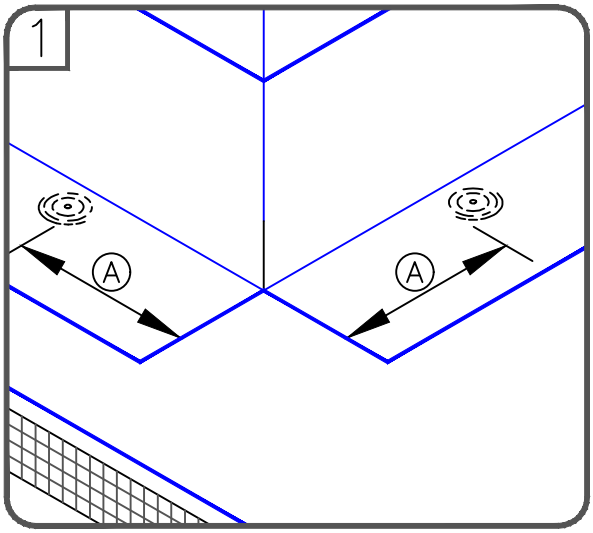

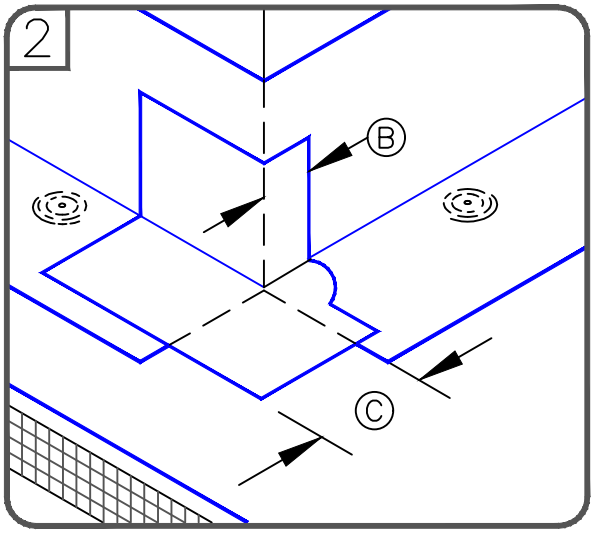

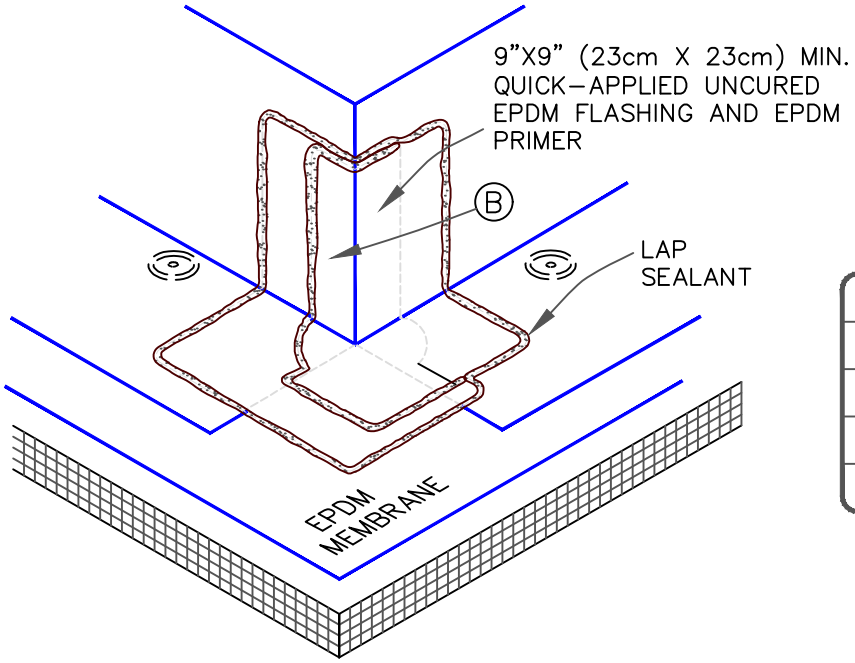

DIMENSIONS		cm	
A	6"	15	TO
	9"	23	
B	2"	5	MIN.
C	3"	7.5	MAX.

NOTES:

1. A HEAT GUN MUST BE USED WHEN FORMING QUICK-APPLIED UNCURED EPDM FLASHING IN COLDER TEMPERATURES.

2. FOR PROJECTS WITH 25 & 30-YEAR WARRANTIES OR WHEN USING 90-MIL MEMBRANE, REFER TO DETAIL VGC-15.7A FOR REQUIRED FLASHING ENHANCEMENTS.

MAXIMUM WARRANTY: 20 YEARS

VERSICO ROOFING SYSTEMS
© 2024 VERSICO

OUTSIDE CORNER WITH QUICK-APPLIED UNCURED EPDM FLASHING (2 PIECE)

→ EPDM MEMBRANE
→ APPROVED SUBSTRATE
0 → SEE NOTE(S)

THERMOSET ROOFING SYSTEM

VGC-15.6

1

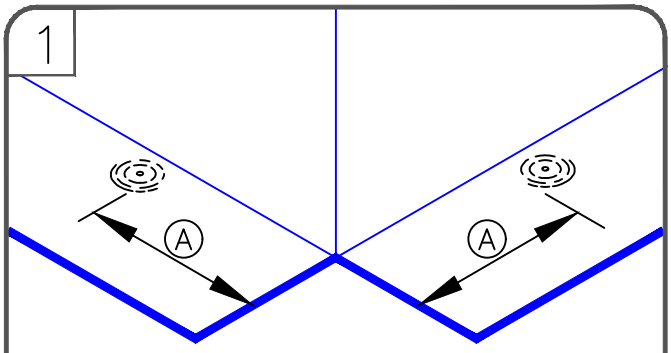

FASTEN MEMBRANE AND FLASH CURB OR WALL WITH CURED EPDM MEMBRANE FOLLOWING STANDARD PROCEDURES USING BONDING ADHESIVE and QA SEAM TAPE.

2

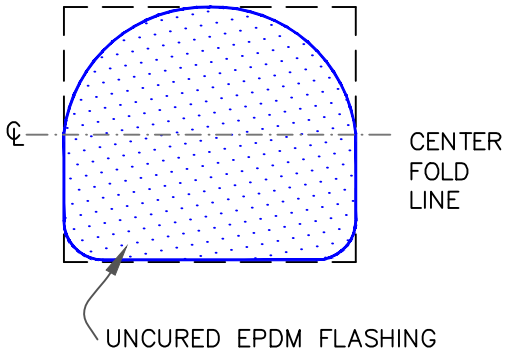

CUT A 9"x9" (23cm x 23cm) SECTION OF QUICK–APPLIED UNCURED EPDM FLASHING AND MAKE ROUNDED CORNERS AS SHOWN.

3

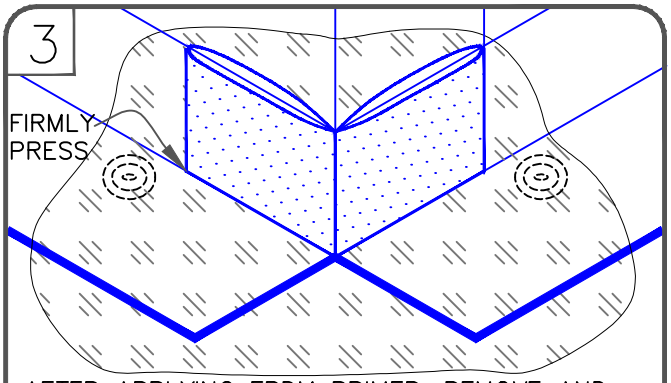

AFTER APPLYING EPDM PRIMER, REMOVE AND REPLACE POLY BACKING. FOLD FLASHING IN HALF WITH ROUNDED PORTION TURNED UP. CENTER FLASHING ON CORNER AND FIRMLY PRESS AGAINST VERTICAL SURFACE.

4

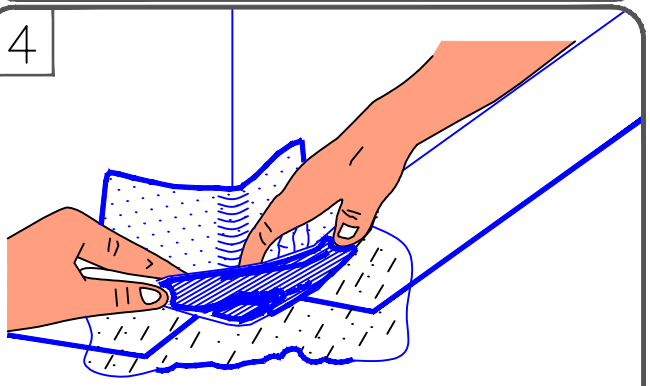

ROLL AND CREASE FLASHING TIGHTLY INTO ANGLE CHANGE AND FIRMLY ROLL FLASHING ONTO THE DECK MEMBRANE.

5

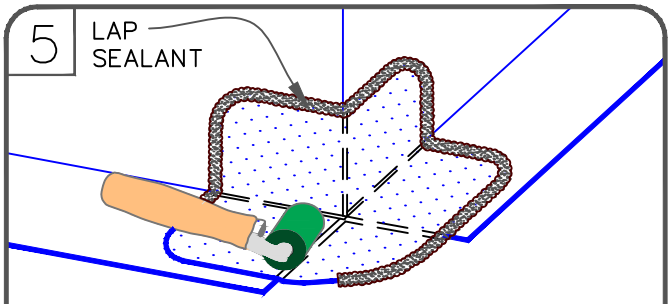

AFTER ADHERING, ROLL WITH A TWO INCH WIDE STEEL HAND ROLLER. PAY PARTICULAR ATTENTION TO THE STEP OFFS AND ANGLE CHANGES.

DIMENSIONS		cm	
A	6"	15	TO
	9"	23	

NOTES:

1. FOR PROJECTS WITH 25 & 30–YEAR WARRANTIES OR WHEN USING 90–MIL MEMBRANE, REFER TO DETAIL VGC–15.7A FOR REQUIRED FLASHING ENHANCEMENTS.

2. A HEAT GUN MUST BE USED WHEN FORMING QUICK–APPLIED UNCURED EPDM FLASHING IN COLDER TEMPERATURES.

MAXIMUM WARRANTY: 20 YEARS

VERSICO ROOFING SYSTEMS
© 2024 VERSICO

OUTSIDE CORNER WITH QUICK–APPLIED UNCURED EPDM FLASHING (1 PIECE)

→ EPDM MEMBRANE
→ APPROVED SUBSTRATE
0 → SEE NOTE(S)

THERMOSET ROOFING SYSTEM

VGC–15.7

1

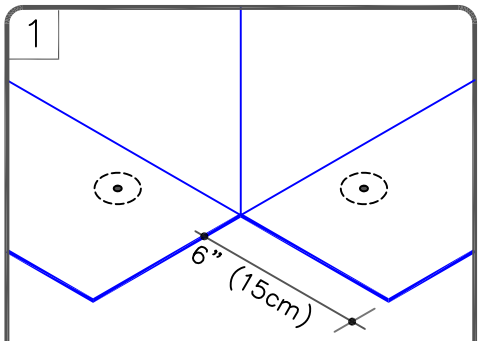

FASTEN MEMBRANE AND FLASH CURB OR WALL WITH CURED EPDM MEMBRANE FOLLOWING STANDARD PROCEDURES.

2

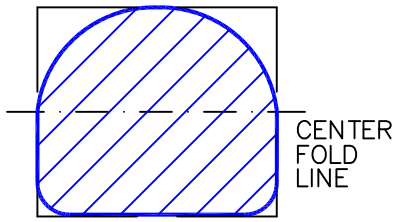

USE PRE-CUT T-JOINT COVERS OR CUT A 6"x6" (15X15cm) & 12"x12" (30X30cm) SECTION OF QUICK-APPLIED UNCURED FLASHING AND ROUND CORNERS

3

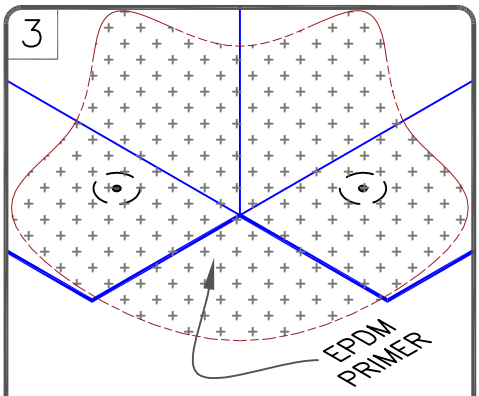

CLEAN EPDM SPLICE AREA WITH WEATHERED MEMBRANE CLEANER PRIOR TO APPLYING EPDM PRIMER

4

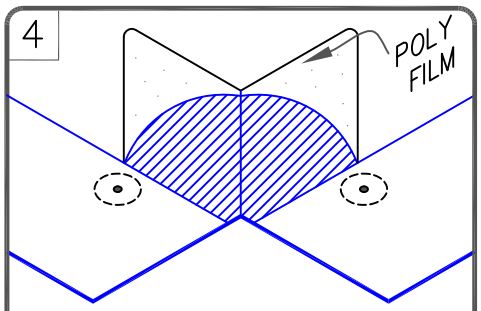

REMOVE & REPLACE POLY BACKING ON FLASHING. FOLD FLASHING IN HALF WITH ROUNDED PORTION TURNED UP. CENTER ON CORNER & FIRMLY PRESS AGAINST VERTICAL SURFACE

5

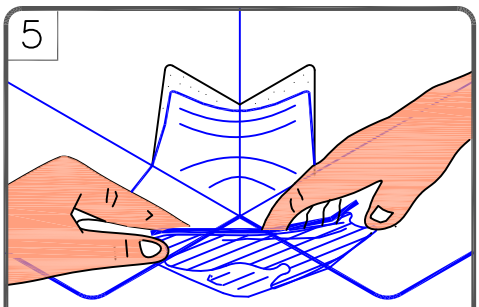

ROLL & CREASE FLASHING TIGHTLY INTO ANGLE CHANGE & FIRMLY ROLL FLASHING ONTO THE DECK MEMBRANE

USE HEAT GUN TO WARM THE FLASHING IN COLD WEATHER

6

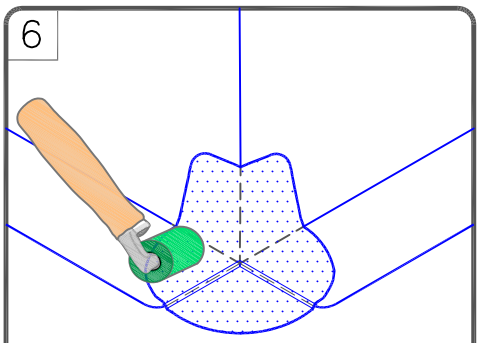

ROLL WITH A TWO INCH WIDE STEEL HAND ROLLER. PAY PARTICULAR ATTENTION TO THE STEP OFFS AND ANGLE CHANGES

7

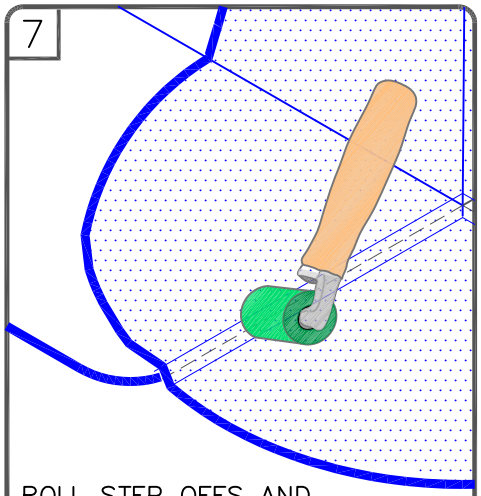

ROLL STEP OFFS AND ANGLE CHANGES

8

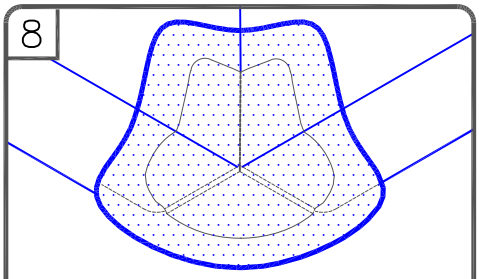

APPLY EPDM PRIMER TO SPLICE AREA. INSTALL THE 12"X12" (30cmX30cm) SECTION OF QUICK-APPLIED UNCURED EPDM FLASHING CENTERED OVER PREVIOUSLY APPLIED FLASHING.

9

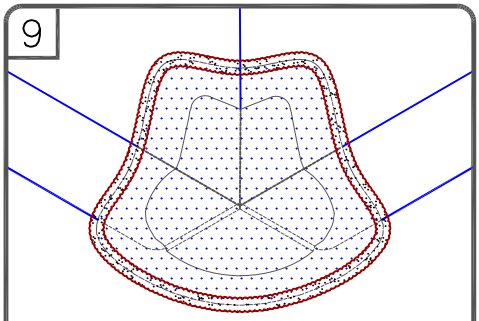

SEAL ALL EDGES WITH LAP SEALANT AS SHOWN

MAXIMUM WARRANTY: 30 YEARS

VERSICO ROOFING SYSTEMS

© 2024 VERSICO

OUTSIDE CORNER FLASHING FOR PROJECTS WITH 90-MIL MEMBRANE OR 30 YEAR WARRANTIES

→ EPDM MEMBRANE
→ APPROVED SUBSTRATE
0 → SEE NOTE(S)

VersiGard COMMON DETAILS (EPDM)

VGC-15.7A

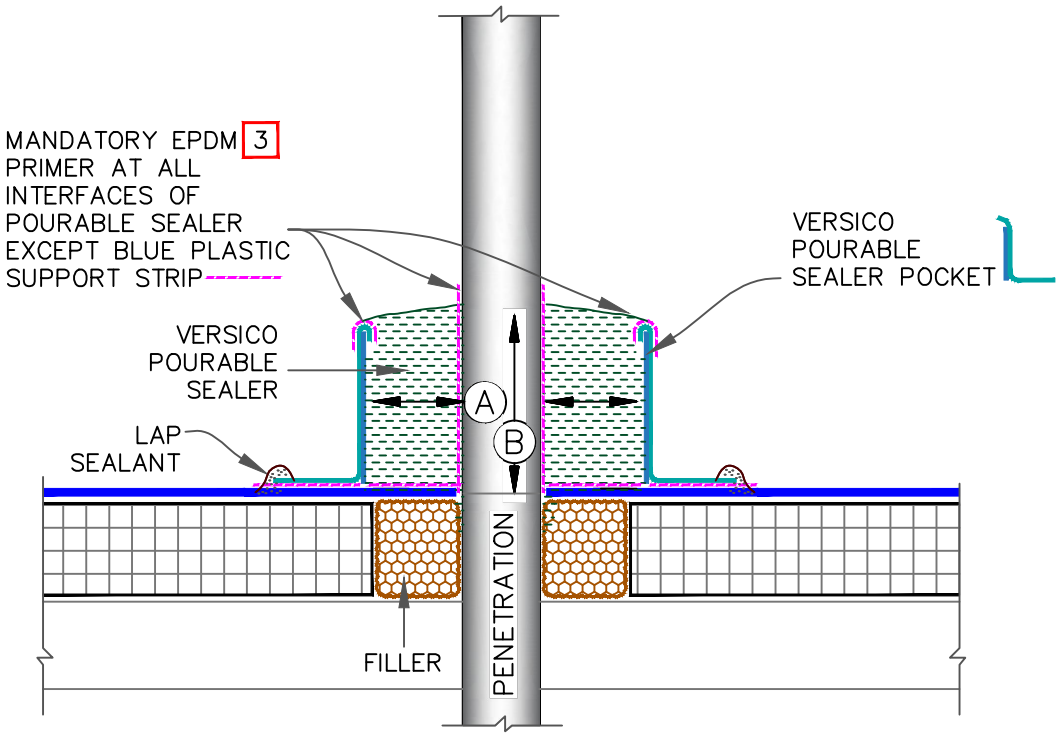

NOTES:

1. THE MAXIMUM ALLOWABLE SURFACE TEMPERATURE OF THE PENETRATION SHALL NOT EXCEED 180° F (82° C).

2. ALL DEBRIS (PAINT, RUST, LEAD, OTHER FLASHINGS, ETC.) MUST BE REMOVED FROM THE PENETRATION.

3. ALL SURFACES MUST BE PRIMED WITH EPDM PRIMER PRIOR TO APPLYING POURABLE SEALER. DO NOT PRIME THE BLUE PLASTIC SUPPORT STRIP.

4. POURABLE SEALER MUST COMPLETELY FILL POURABLE SEALER POCKET TO PREVENT PONDING OF WATER.

5. POURABLE SEALER MUST CONTACT PRIMED QUICK–APPLIED UNCURED EPDM FLASHING AND DECK MEMBRANE.

6. SECUREMENT IS REQUIRED FOR POURABLE SEALER POCKETS WHICH ARE GREATER THAN 18" (46cm) IN DIAMETER. REFER TO SPECIFICATIONS.

7. ON MECHANICALLY–FASTENED ROOFING SYSTEMS, ADDITIONAL MEMBRANE SECUREMENT IS REQUIRED (SIMILAR TO DETAIL VGMA–8.1) REGARDLESS OF SIZE OR DIAMETER.

8. MINIMUM 1" (2.5cm) CLEARANCE REQUIRED BETWEEN PENETRATIONS.

DIMENSIONS		cm	
A	1"	2.5	MIN.
B	2"	5	MIN.

MAXIMUM WARRANTY: 20 YEARS

VERSICO ROOFING SYSTEMS
© 2024 VERSICO

QUICK–APPLIED POURABLE SEALER POCKET

→ EPDM MEMBRANE
→ APPROVED SUBSTRATE
0 → SEE NOTE(S)

THERMOSET ROOFING SYSTEM

VGC–16.1

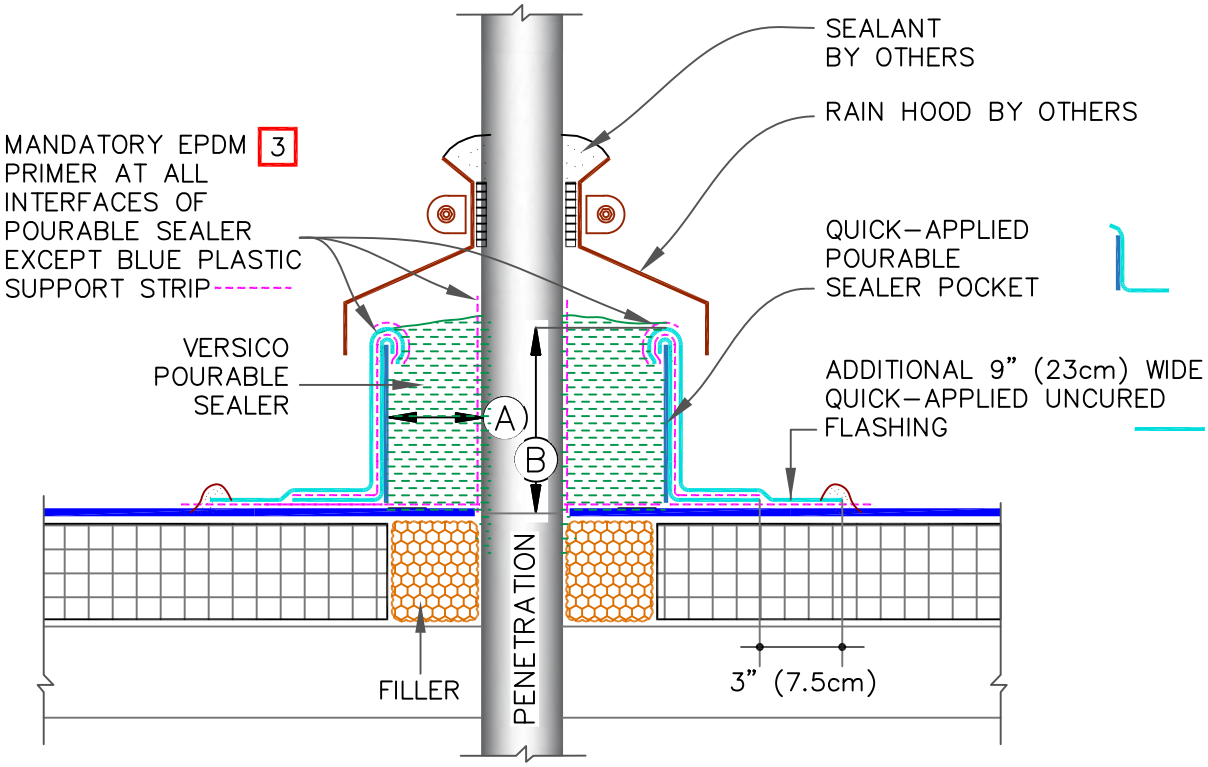

NOTES:

1. THE MAXIMUM ALLOWABLE SURFACE TEMPERATURE OF THE PENETRATION SHALL NOT EXCEED 180° F (82° C).
2. ALL DEBRIS (PAINT, RUST, LEAD, OTHER FLASHINGS, ETC.) MUST BE REMOVED FROM THE PENETRATION.
3. ALL SURFACES MUST BE PRIMED WITH EPDM PRIMER PRIOR TO APPLYING POURABLE SEALER. DO NOT PRIME THE BLUE PLASTIC SUPPORT STRIP.
4. POURABLE SEALER MUST COMPLETELY FILL POURABLE SEALER POCKET TO PREVENT PONDING OF WATER.
5. POURABLE SEALER MUST CONTACT PRIMED QUICK–APPLIED UNCURED EPDM FLASHING AND DECK MEMBRANE.
6. SECUREMENT IS REQUIRED FOR POURABLE SEALER POCKETS WHICH ARE GREATER THAN 18" (46cm) IN DIAMETER. REFER TO SPECIFICATIONS.
7. ON MECHANICALLY–FASTENED ROOFING SYSTEMS, ADDITIONAL MEMBRANE SECUREMENT IS REQUIRED (SIMILAR TO DETAIL VGMA–8.1) REGARDLESS OF SIZE OR DIAMETER.
8. MINIMUM 1" (2.5cm) CLEARANCE REQUIRED BETWEEN PENETRATIONS.

DIMENSIONS		cm	
A	1"	2.5	MIN.
B	2"	5	MIN.

MAXIMUM WARRANTY: 30 YEARS

VERSICO ROOFING SYSTEMS
© 2024 VERSICO

QUICK–APPLIED POURABLE SEALER POCKET 30 YEAR WARRANTIES)

→ EPDM MEMBRANE
→ APPROVED SUBSTRATE
0 → SEE NOTE(S)

VersiGard COMMON DETAILS (EPDM)

VGC–16.1A

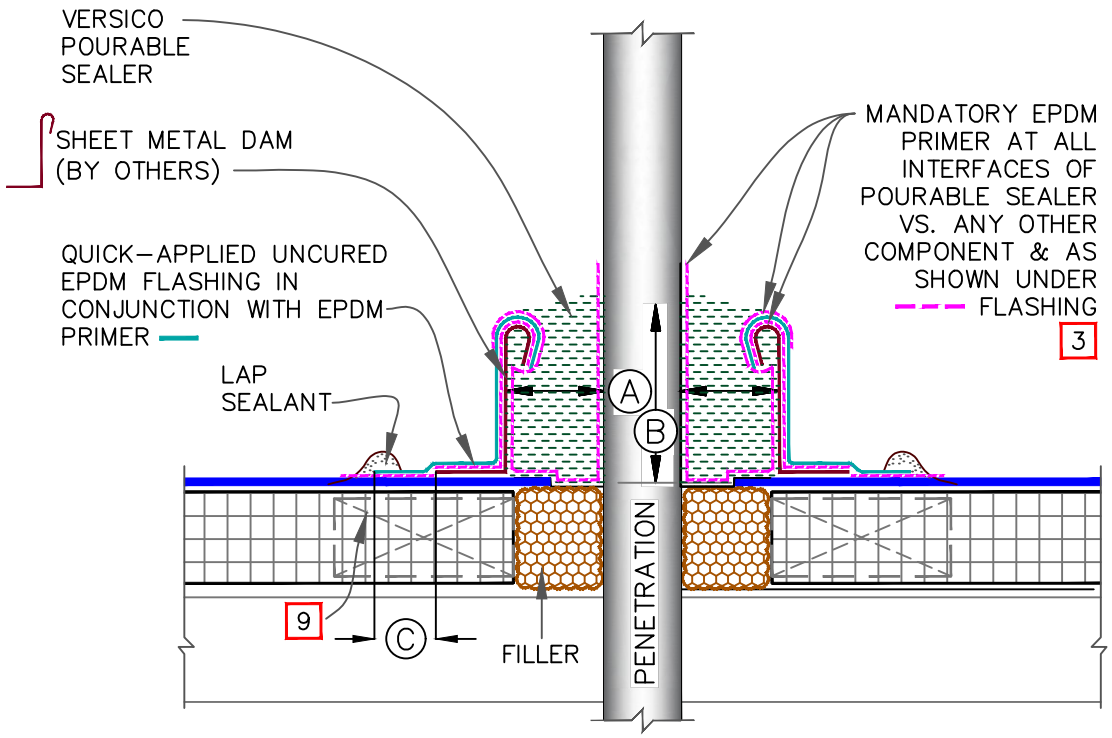

NOTES:

1. THE MAXIMUM ALLOWABLE SURFACE TEMPERATURE OF THE PENETRATION SHALL NOT EXCEED 180° F (82° C).
2. ALL DEBRIS (PAINT, RUST, LEAD, OTHER FLASHINGS, ETC.) MUST BE REMOVED FROM THE PENETRATION.
3. ALL SURFACES MUST BE PRIMED WITH EPDM PRIMER PRIOR TO APPLYING POURABLE SEALER.
4. POURABLE SEALER MUST COMPLETELY FILL POURABLE SEALER POCKET TO PREVENT PONDING OF WATER.
5. POURABLE SEALER MUST CONTACT PRIMED QUICK–APPLIED UNCURED EPDM FLASHING AND DECK MEMBRANE.
6. SECUREMENT IS REQUIRED FOR POURABLE SEALER POCKETS WHICH ARE GREATER THAN 18" (46cm) IN DIAMETER. REFER TO SPECIFICATIONS.
7. ON MECHANICALLY–FASTENED ROOFING SYSTEMS, ADDITIONAL MEMBRANE SECUREMENT IS REQUIRED (SIMILAR TO DETAIL VGMA–8.1) REGARDLESS OF SIZE AND DIAMETER, UNLESS WOOD NAILERS ARE PRESENT.
8. DECK FLANGE MUST BE CONTINUOUS WITH ROUNDED CORNERS.
9. WHEN ANY ONE SIDE OF THE FIELD FABRICATED POURABLE SEALER POCKET EXCEEDS 12" (30cm), USE WOOD BLOCKING TO ANCHOR SHEET METAL.
10. MINIMUM 1" (2.5cm) CLEARANCE REQUIRED BETWEEN PENETRATIONS.

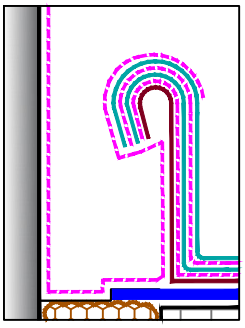

MANDATORY EPDM PRIMER AT ALL INTERFACES OF POURABLE SEALER VS. ANY OTHER COMPONENT & AS SHOWN UNDER FLASHING

DIMENSIONS		cm	
A	1"	2.5	MIN.
B	2"	5	MIN.
C	3"	7.5	

MAXIMUM WARRANTY: 20 YEARS

VERSICO ROOFING SYSTEMS
© 2024 VERSICO

FIELD FABRICATED POURABLE SEALER POCKET

→ EPDM MEMBRANE
→ APPROVED SUBSTRATE
0 → SEE NOTE(S)

THERMOSET ROOFING SYSTEM

VGC–16.2

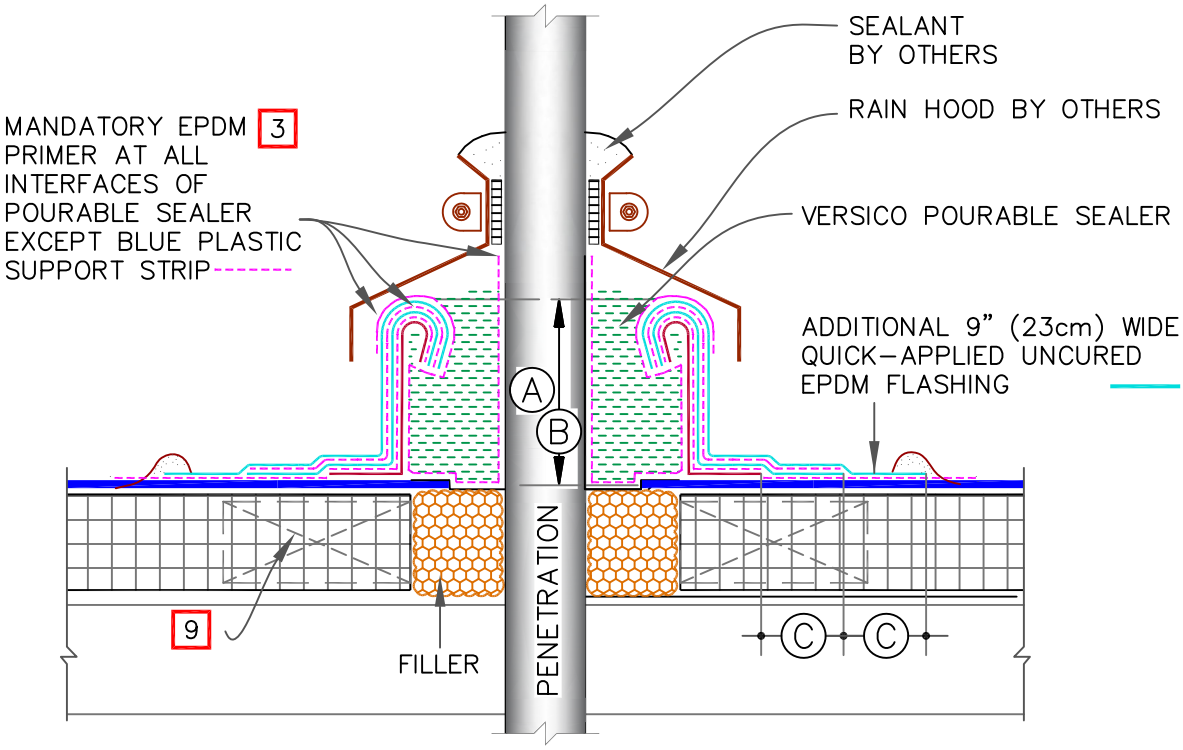

NOTES:

1. THE MAXIMUM ALLOWABLE SURFACE TEMPERATURE OF THE PENETRATION SHALL NOT EXCEED 180° F (82° C).
2. ALL DEBRIS (PAINT, RUST, LEAD, OTHER FLASHINGS, ETC.) MUST BE REMOVED FROM THE PENETRATION.
3. ALL SURFACES MUST BE PRIMED WITH EPDM PRIMER PRIOR TO APPLYING POURABLE SEALER.
4. POURABLE SEALER MUST COMPLETELY FILL POURABLE SEALER POCKET TO PREVENT PONDING OF WATER.
5. POURABLE SEALER MUST CONTACT PRIMED QUICK-APPLIED UNCURED EPDM FLASHING AND DECK MEMBRANE.
6. SECUREMENT IS REQUIRED FOR POURABLE SEALER POCKETS WHICH ARE GREATER THAN 18" (46cm) IN DIAMETER. REFER TO SPECIFICATIONS.
7. ON MECHANICALLY-FASTENED ROOFING SYSTEMS, ADDITIONAL MEMBRANE SECUREMENT IS REQUIRED (SIMILAR TO DETAIL VGMA-8.1) REGARDLESS OF SIZE AND DIAMETER, UNLESS WOOD NAILERS ARE PRESENT.
8. DECK FLANGE MUST BE CONTINUOUS WITH ROUNDED CORNERS.
9. WHEN ANY ONE SIDE OF THE FIELD FABRICATED POURABLE SEALER POCKET EXCEEDS 12" (30cm), USE WOOD BLOCKING TO ANCHOR SHEET METAL.
10. MINIMUM 1" (2.5cm) CLEARANCE REQUIRED BETWEEN PENETRATIONS.

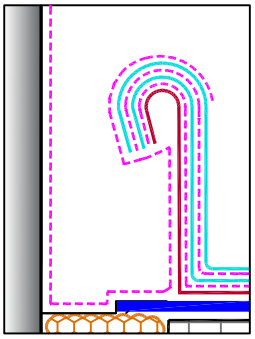

MANDATORY EPDM PRIMER AT ALL INTERFACES OF POURABLE SEALER VS. ANY OTHER COMPONENT & AS SHOWN UNDER FLASHING

DIMENSIONS		cm	
A	1"	2.5	MIN.
B	2"	5	MIN.
C	3"	7.5	

MAXIMUM WARRANTY: 30 YEARS

VERSICO ROOFING SYSTEMS
© 2024 VERSICO

FIELD FABRICATED POURABLE SEALER POCKET (30 YEAR WARRANTIES)

→ EPDM MEMBRANE
→ APPROVED SUBSTRATE
0 → SEE NOTE(S)

VersiGard COMMON DETAILS (EPDM)

VGC-16.2A

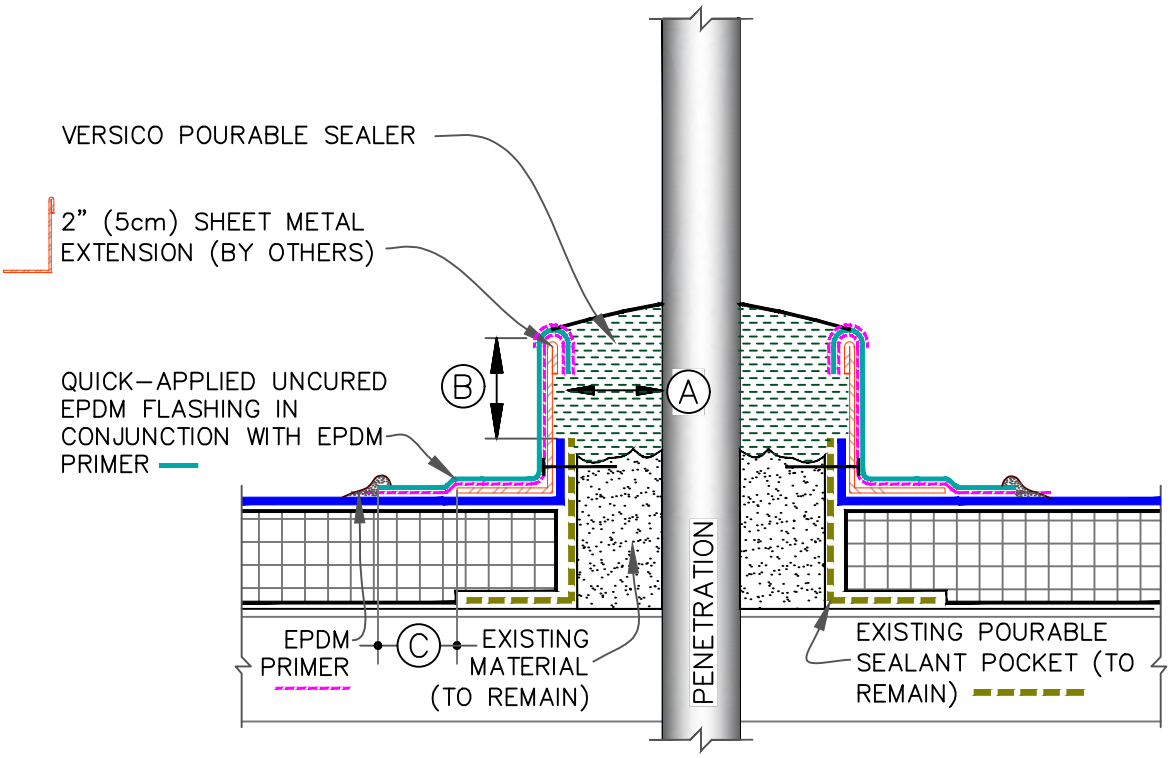

NOTES:

1. THE MAXIMUM ALLOWABLE SURFACE TEMPERATURE OF THE PENETRATION SHALL NOT EXCEED 180° F (82° C).
2. ALL DEBRIS (PAINT, RUST, LEAD, OTHER FLASHINGS, ETC.) MUST BE REMOVED FROM THE PENETRATION.
3. ALL SURFACES MUST BE PRIMED WITH EPDM PRIMER PRIOR TO APPLYING POURABLE SEALER.
4. POURABLE SEALER MUST COMPLETELY FILL POURABLE SEALER POCKET TO PREVENT PONDING OF WATER.
5. POURABLE SEALER MUST CONTACT PRIMED QUICK–APPLIED UNCURED EPDM FLASHING.
6. SHAPE METAL DAM TO FIT EXISTING PITCH POCKET.
7. SECUREMENT IS REQUIRED FOR POURABLE SEALER POCKETS WHICH ARE GREATER THAN 18" (46cm) IN DIAMETER. REFER TO SPECIFICATIONS.
8. ON MECHANICALLY–FASTENED ROOFING SYSTEMS, ADDITIONAL MEMBRANE SECUREMENT IS REQUIRED (SIMILAR TO DETAIL VGMA–8.1) REGARDLESS OF SIZE OR DIAMETER.
9. MINIMUM 1" (2.5cm) CLEARANCE REQUIRED BETWEEN PENETRATIONS.

MAXIMUM WARRANTY: 20 YEARS

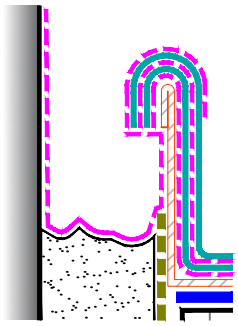

MANDATORY EPDM PRIMER AT ALL INTERFACES OF POURABLE SEALER

DIMENSIONS		cm	
A	1"	2.5	MIN.
B	2"	5	MIN.
C	3"	7.5	

VERSICO ROOFING SYSTEMS

© 2024 VERSICO

EXTENDED POURABLE SEALER POCKET

→ EPDM MEMBRANE
→ APPROVED SUBSTRATE
0 → SEE NOTE(S)

THERMOSET ROOFING SYSTEM

VGC–16.3

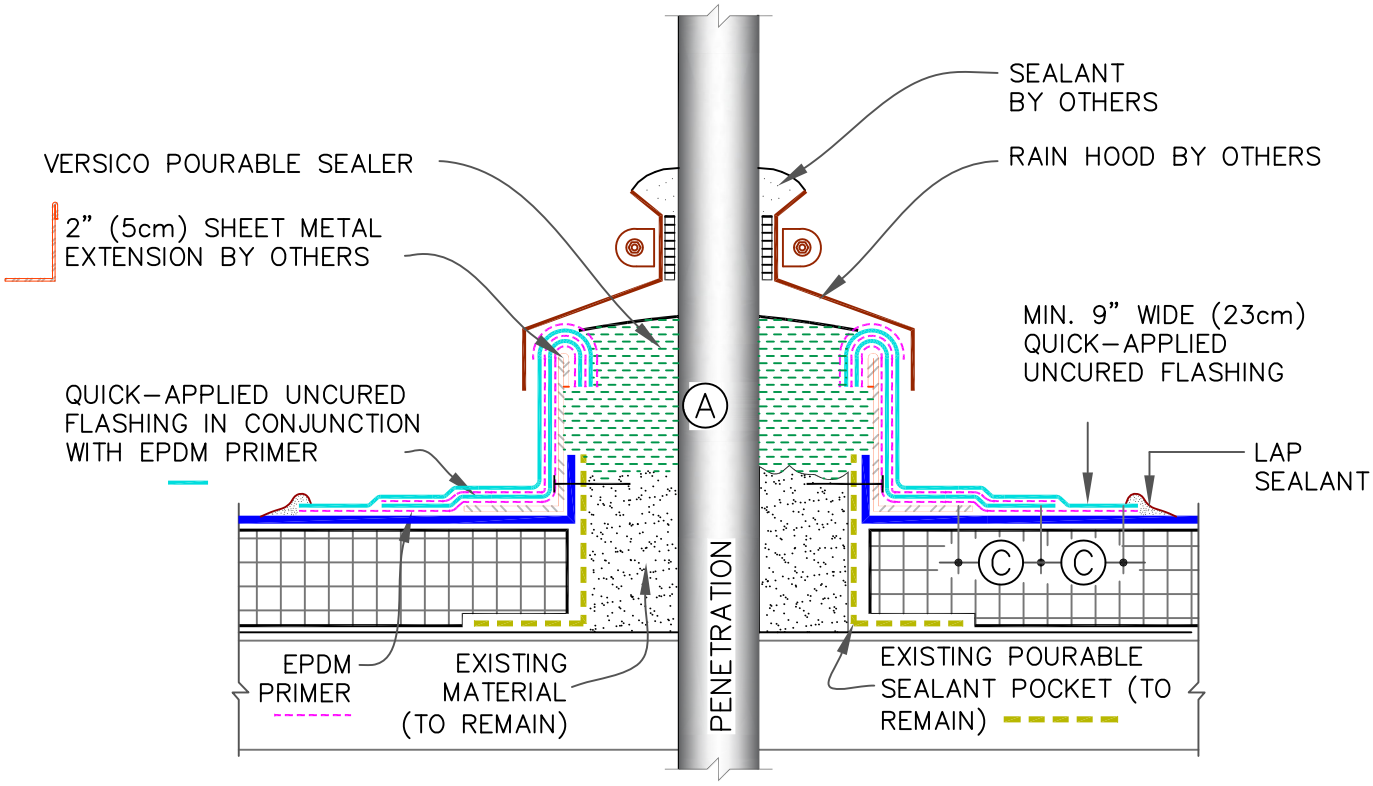

NOTES:

1. THE MAXIMUM ALLOWABLE SURFACE TEMPERATURE OF THE PENETRATION SHALL NOT EXCEED 180° F (82° C).
2. ALL DEBRIS (PAINT, RUST, LEAD, OTHER FLASHINGS, ETC.) MUST BE REMOVED FROM THE PENETRATION.
3. ALL SURFACES MUST BE PRIMED WITH EPDM PRIMER PRIOR TO APPLYING POURABLE SEALER.
4. POURABLE SEALER MUST COMPLETELY FILL POURABLE SEALER POCKET TO PREVENT PONDING OF WATER.
5. POURABLE SEALER MUST CONTACT PRIMED QUICK-APPLIED UNCURED EPDM FLASHING.
6. SHAPE METAL DAM TO FIT EXISTING PITCH POCKET.
7. SECUREMENT IS REQUIRED FOR POURABLE SEALER POCKETS WHICH ARE GREATER THAN 18" (46cm) IN DIAMETER. REFER TO SPECIFICATIONS.
8. ON MECHANICALLY-FASTENED ROOFING SYSTEMS, ADDITIONAL MEMBRANE SECUREMENT IS REQUIRED (SIMILAR TO DETAIL VGMA-8.1) REGARDLESS OF SIZE OR DIAMETER.
9. MINIMUM 1" (2.5cm) CLEARANCE REQUIRED BETWEEN PENETRATIONS.

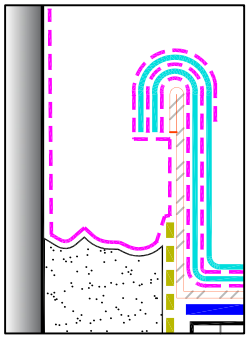

MANDATORY EPDM PRIMER AT ALL INTERFACES OF POURABLE SEALER

DIMENSIONS		cm	
A	1"	2.5	MIN.
B	2"	5	MIN.
C	3"	7.5	

MAXIMUM WARRANTY: 30 YEARS

VERSICO ROOFING SYSTEMS
© 2024 VERSICO

EXTENDED PURABLE SEALER POCKET (30 YEAR WARRANTIES)

→ EPDM MEMBRANE
→ APPROVED SUBSTRATE
0 → SEE NOTE(S)

VersiGard COMMON DETAILS (EPDM)

VGC-16.3A

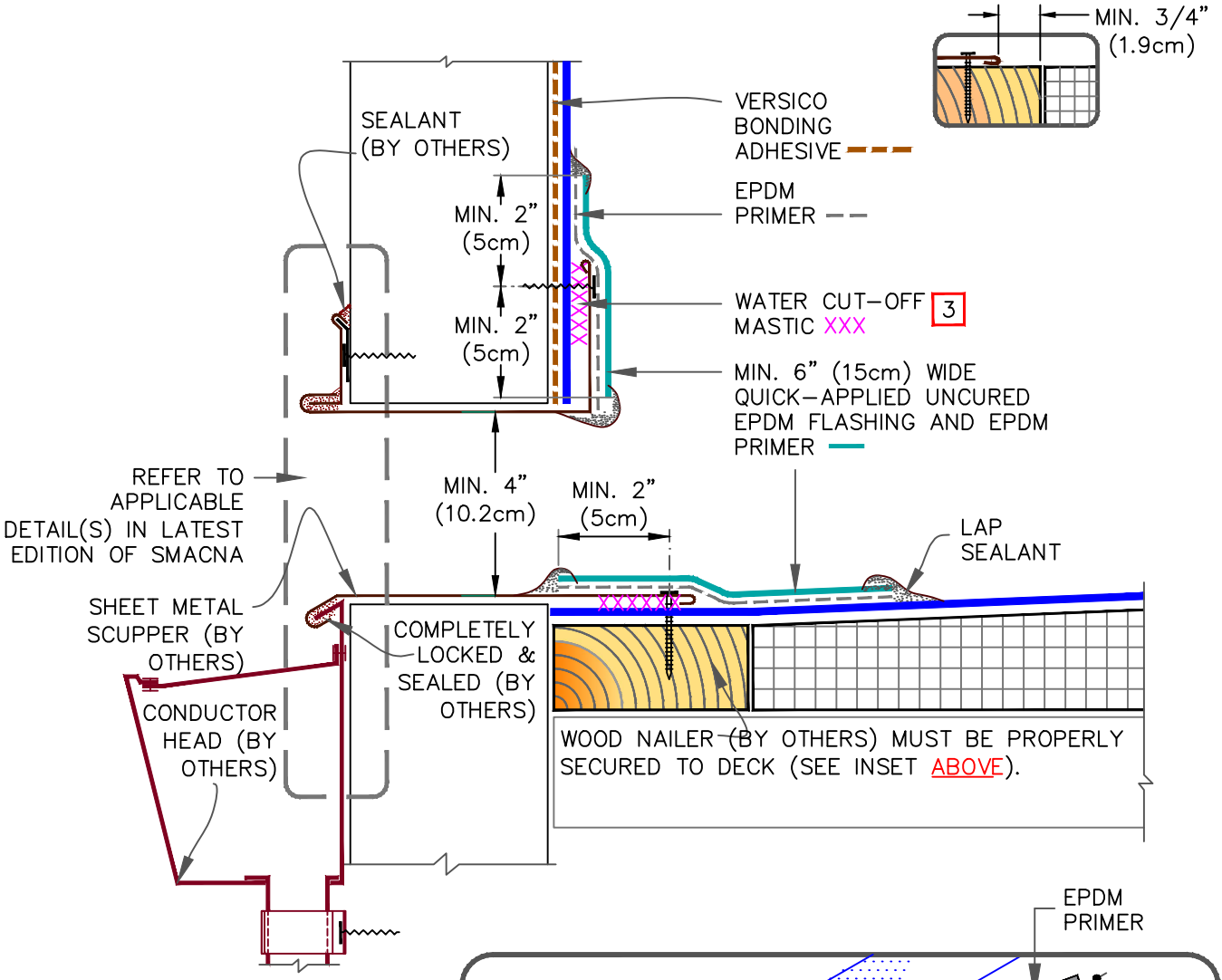

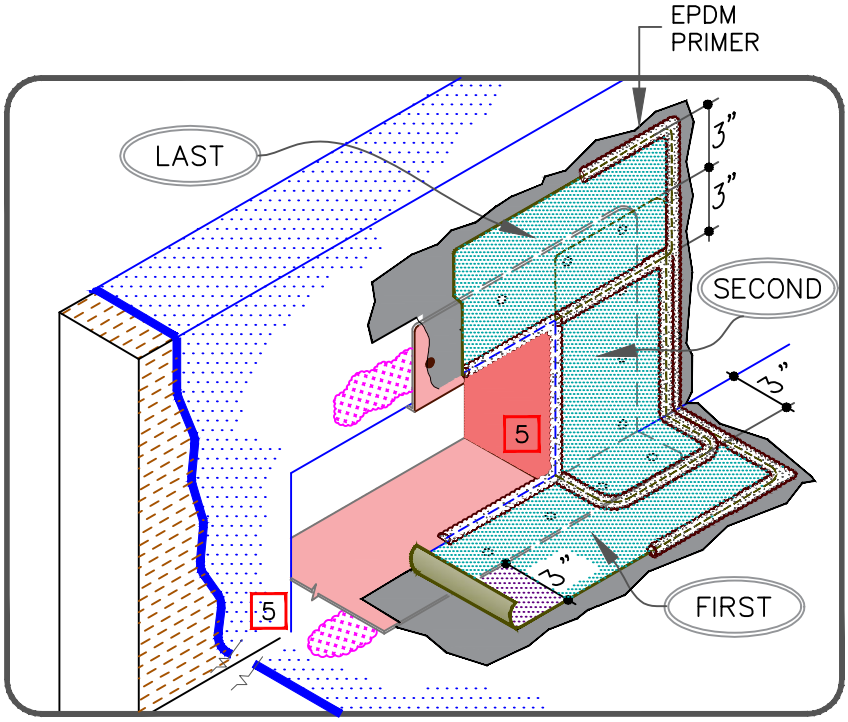

NOTES:

1. METAL SCUPPER BOX MUST HAVE CONTINUOUS FLANGES WITH ROUNDED CORNERS. SOLDER ALL SCUPPER SEAMS WATER-TIGHT.
2. WATER CUT-OFF MASTIC UNDER SCUPPER FLANGES MUST BE UNDER CONSTANT COMPRESSION.
3. CLEAN METAL FLANGE WITH WEATHERED MEMBRANE CLEANER; AND ALLOW TO DRY.
4. SCUPPERS WITHOUT A CONTINUOUS WATERTIGHT DESIGN MUST BE FLASHED IN PER DETAIL VGC-15 OUTSIDE CORNER.

MAXIMUM WARRANTY: 25 YEARS

VERSICO ROOFING SYSTEMS

© 2024 VERSICO

SCUPPER: SINGLE LAYER FLASHING

→ EPDM MEMBRANE

→ APPROVED SUBSTRATE

0 → SEE NOTE(S)

THERMOSET ROOFING SYSTEM

VGC-18.1

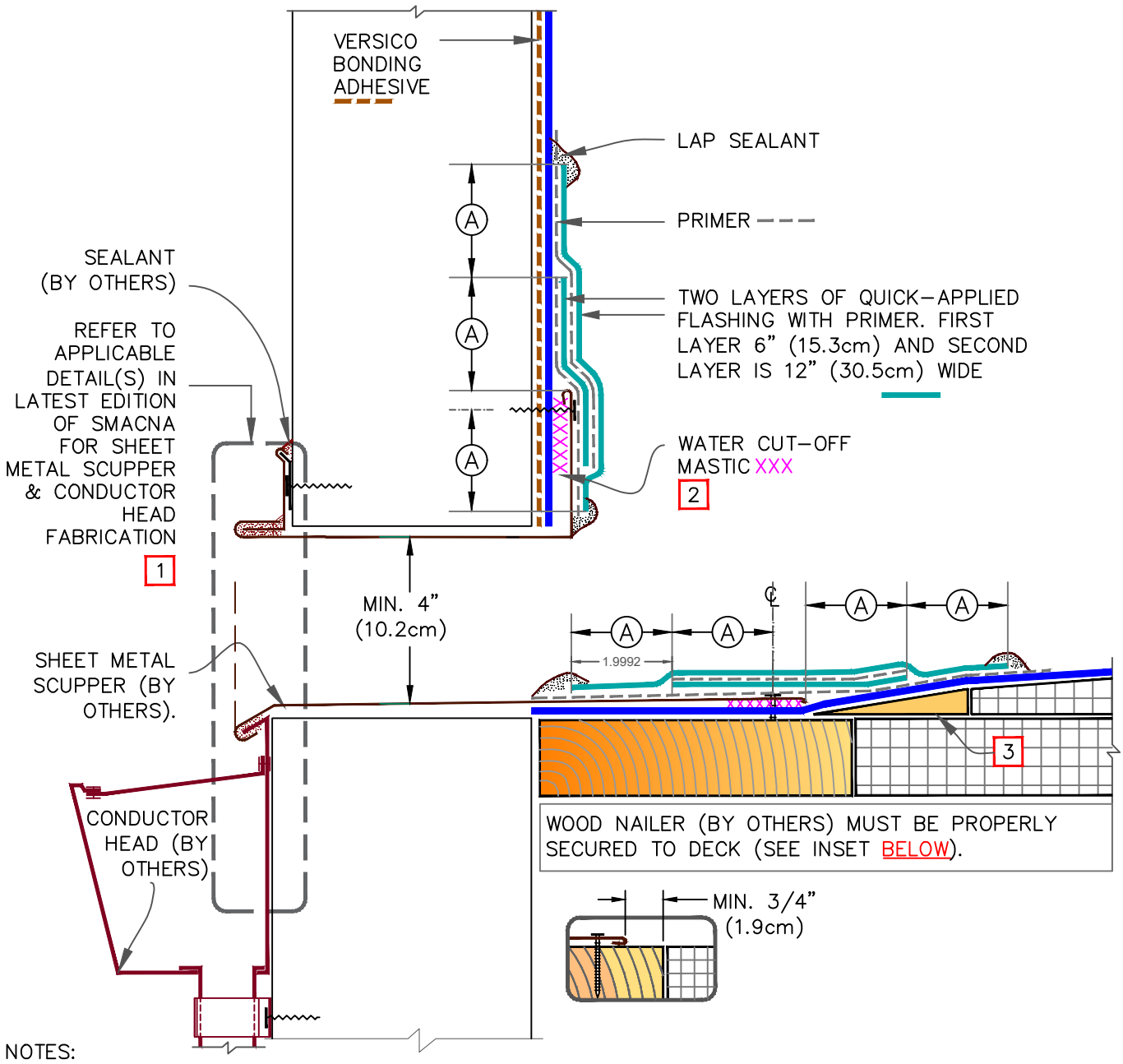

NOTES:

1. METAL SCUPPER BOX MUST HAVE CONTINUOUS FLANGES WITH ROUNDED CORNERS, SOLDER ALL SCUPPER SEAMS AIR & WATER-TIGHT.
2. WATER CUT-OFF MASTIC UNDER SCUPPER FLANGES MUST BE UNDER CONSTANT COMPRESSION.
3. TAPERED EDGE STRIP BY HUNTER OR CANT STRIP, AS REQUIRED & SET IN ADHESIVE OR SHAVE THE EDGES OF TAPERED INSULATION.

DIMENSIONS		cm	
A	2"	5	MIN.
B	3"	7.6	MIN.

MAXIMUM WARRANTY: 30 YEARS

VERSICO ROOFING SYSTEMS
© 2024 VERSICO

SCUPPER: DOUBLE LAYERS FLASHING
PAGE 1 OF 2

→ EPDM MEMBRANE
→ APPROVED SUBSTRATE
0 → SEE NOTE(S)

THERMOSET ROOFING SYSTEM
VGC-18.1A

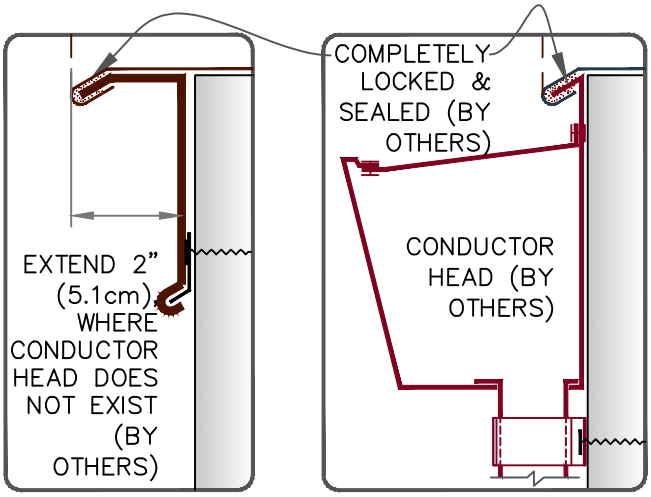

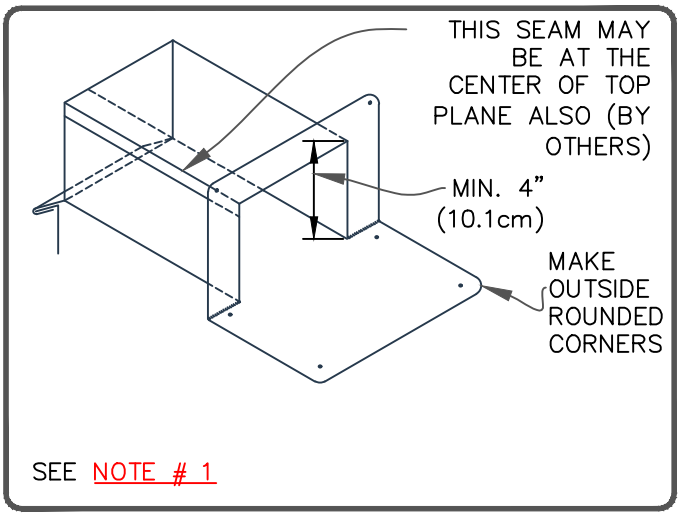

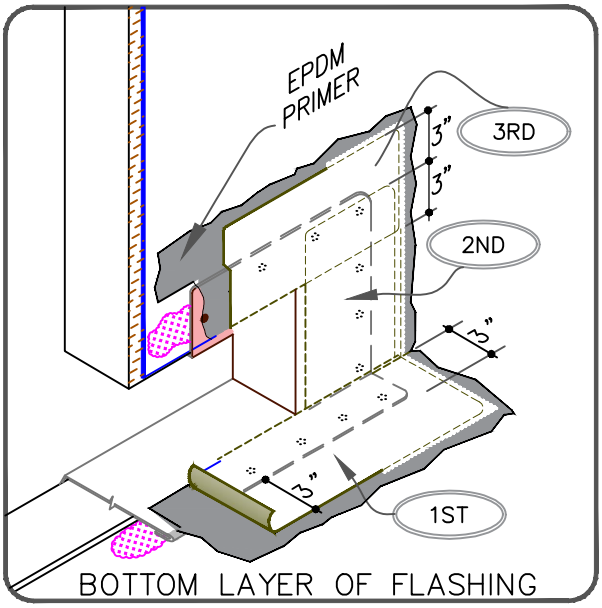

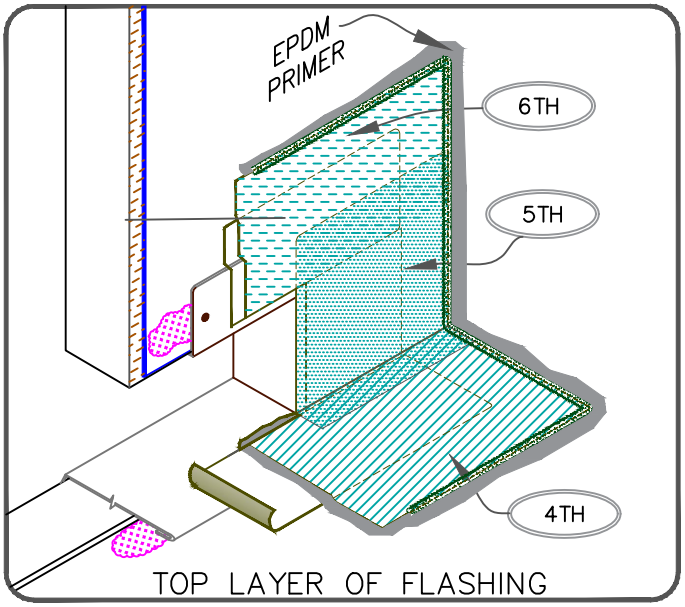

MAXIMUM WARRANTY: 30 YEARS

VERSICO ROOFING SYSTEMS
© 2024 VERSICO

SCUPPER: DOUBLE LAYERS FLASHING
PAGE 2 OF 2

→ EPDM MEMBRANE
→ APPROVED SUBSTRATE
0 → SEE NOTE(S)

THERMOSET ROOFING SYSTEM

VGC–18.1A

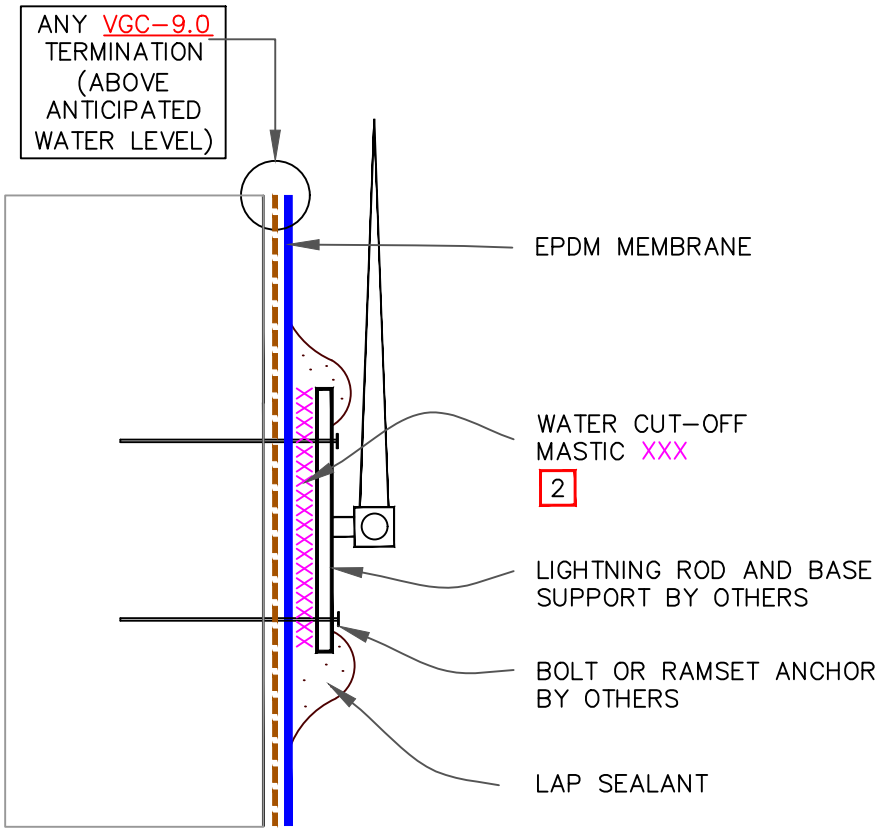

NOTES:

1. DETAIL MAY BE USED FOR ANY FASTENER PENETRATION (E.G., ACCESS LADDER, ANCHOR SUPPORT TO PARAPET).
2. WATER CUT–OFF MASTIC MUST BE UNDER CONSTANT COMPRESSION.
3. COMPLY WITH ZONING ORDNANCE AND LOCAL CODES FOR MOUNTING A LIGHTNING SYSTEM.
4. DETAIL UNACCEPTABLE FOR HORIZONTAL APPLICATIONS ON ROOF DECK.

MAXIMUM WARRANTY: 30 YEARS

VERSICO ROOFING SYSTEMS

© 2024 VERSICO

LIGHTNING ROD AT PARAPET (VERTICAL ATTACHMENT)

→ EPDM MEMBRANE

→ APPROVED SUBSTRATE

0 → SEE NOTE(S)

THERMOSET ROOFING SYSTEM

VGC–20.1

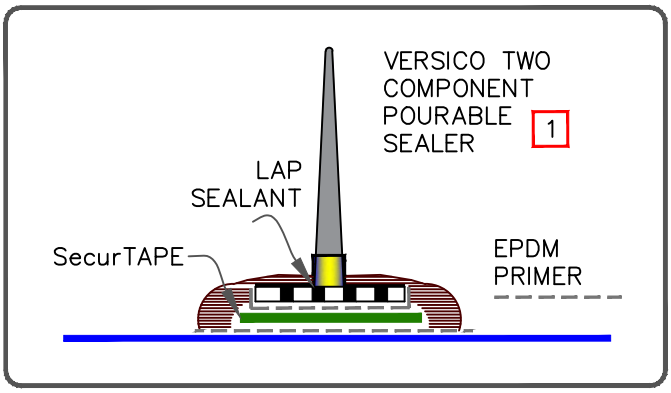

OPTION WITH QA SEAM TAPE ATTACHMENT

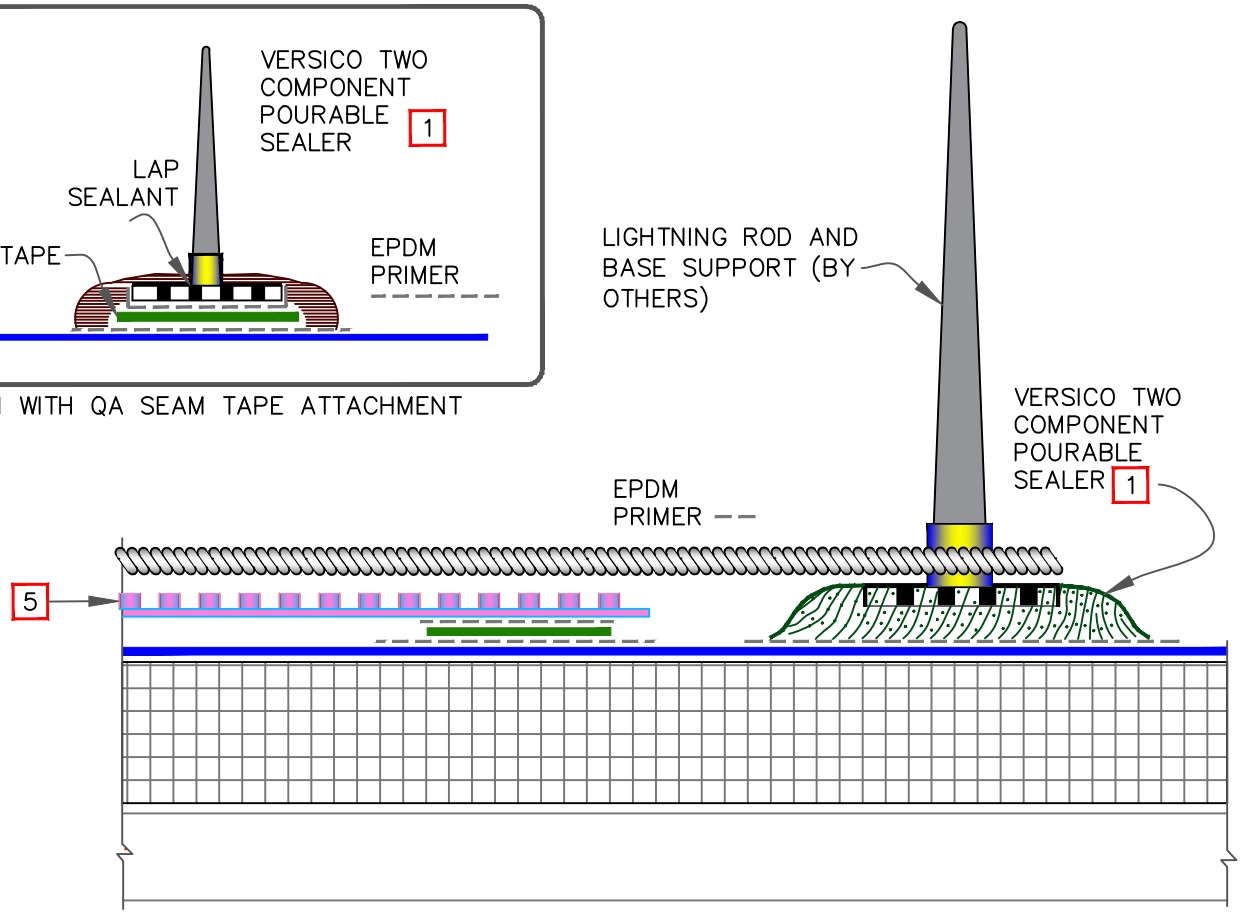

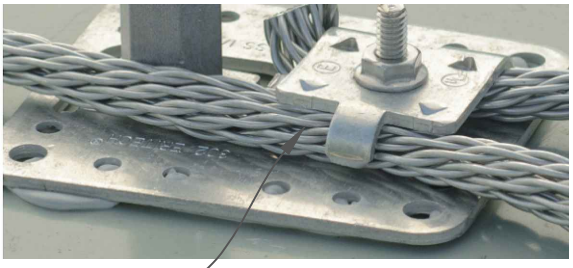

EXAMPLE:
BRAIDED WIRE IN CERTAIN COUNTRIES

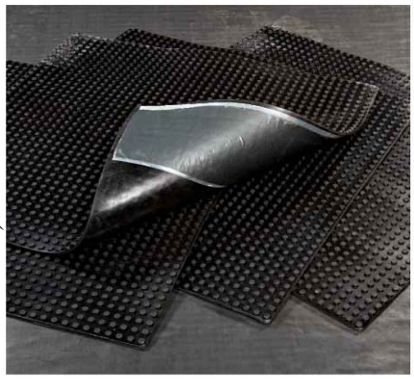

NOTES:

1. VERSICO TWO COMPONENT POURABLE SEALER WITH EPDM PRIMER, OR UNIVERSAL SINGLE-PLY SEALANT.
2. CLEAN EXPOSED MEMBRANE WITH WEATHERED MEMBRANE CLEANER AND ALLOW TO DRY.
3. PRIOR TO THE APPLICATION OF POURABLE SEALER, APPLY EPDM PRIMER TO THE MEMBRANE AND LIGHTNING ROD BASE ACHIEVING A VERY THIN EVEN COAT ON BOTH SURFACES. ALLOW PRIMER TO DRY UNTIL IT IS TACK FREE.
4. COMPLY WITH ZONING ORDNANCE AND LOCAL CODES FOR MOUNTING A LIGHTNING SYSTEM.
5. PIECES OF WALKWAY PADS MAY BE INSTALLED UNDERNEATH THE BRAIDED WIRES. ENSURE, WATER FLOW IS NOT RESTRICTED AND PROVIDE PROPER GAPS.

MAXIMUM WARRANTY: 30 YEARS

VERSICO ROOFING SYSTEMS
© 2024 VERSICO

LIGHTNING ROD AT DECK LEVEL

→ EPDM MEMBRANE
→ APPROVED SUBSTRATE
0 → SEE NOTE(S)

THERMOSET ROOFING SYSTEM
VGC-20.2

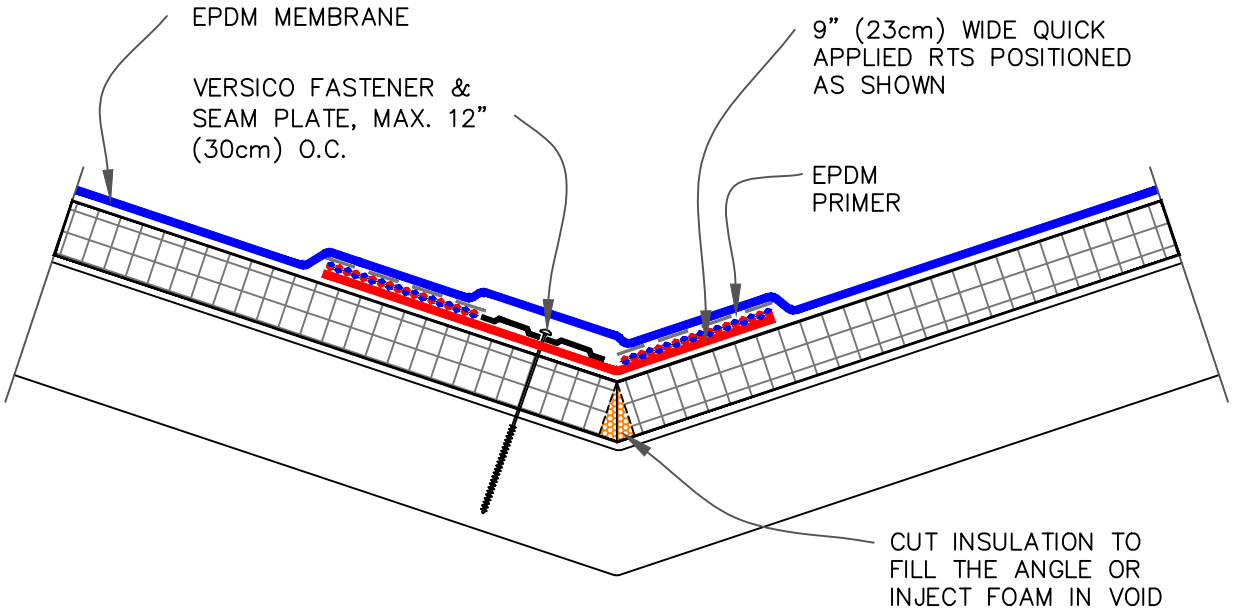

NOTES:

1. DETAIL FOR VERSIGARD/VERSIGARD–WHITE ADHERED AND VERSIGARD MECHANICALLY–FASTENED ROOFING SYSTEMS WHEN SLOPE AT VALLEY EXCEEDS 2" (5cm) IN ONE HORIZONTAL FOOT.
2. ON MECHANICALLY–FASTENED ROOFING SYSTEMS, HPX FASTENERS AND POLYMER SEAMS ARE REQUIRED OVER STEEL DECKS.
3. EPDM PRIMER MUST BE APPLIED TO BACK SIDE OF DECK MEMBRANE PRIOR TO COMPLETING SPLICE TO QUICK APPLIED RTS.

MAXIMUM WARRANTY: 30 YEARS

VERSICO ROOFING SYSTEMS
© 2024 VERSICO

VALLEY

→ EPDM MEMBRANE
→ APPROVED SUBSTRATE
0 → SEE NOTE(S)

THERMOSET ROOFING SYSTEM
VGC–22

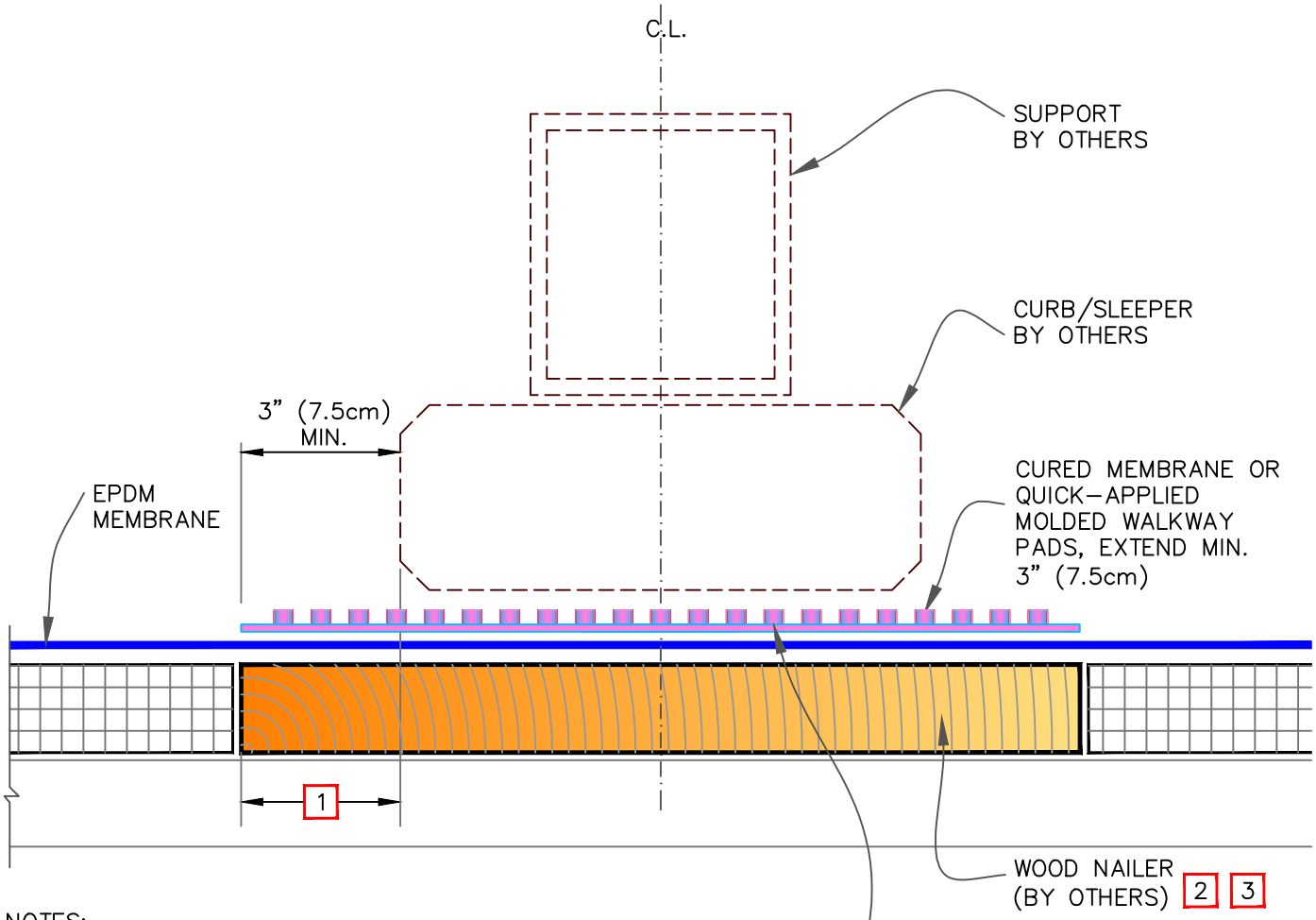

NOTES:

1. SLEEPER MUST BE LARGE ENOUGH TO SUPPORT WEIGHT OF EQUIPMENT WITHOUT INDENTING INSULATION. EXTEND WOOD NAILER OUT AS REQUIRED BY STRUCTURAL ENGINEER TO DISTRIBUTE SUBJECT LOAD OR AT LEAST EXTEND OUT MIN. 3" (7.5cm).

2. ENSURE SCREW/ANCHOR HEADS IN TOP SURFACE OF WOOD BLOCKING ARE RECESSED TO PROTECT MEMBRANE.

3. WOOD NAILERS REQUIRED IF WEIGHT OF SLEEPER MAY INDENT OR DAMAGE INSULATION.

4. CONSULT STRUCTURAL ENGINEER AND/OR SPECIFIER TO AVOID WATER PONDING DUE TO DECK DEFLECTION.

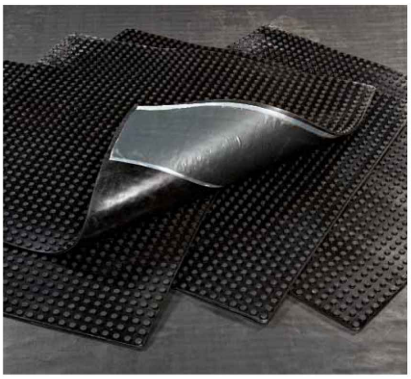

MAXIMUM WARRANTY: 30 YEARS

VERSICO ROOFING SYSTEMS
© 2024 VERSICO

SLEEPER

→ EPDM MEMBRANE
→ APPROVED SUBSTRATE
0 → SEE NOTE(S)

THERMOSET ROOFING SYSTEM

VGC-24

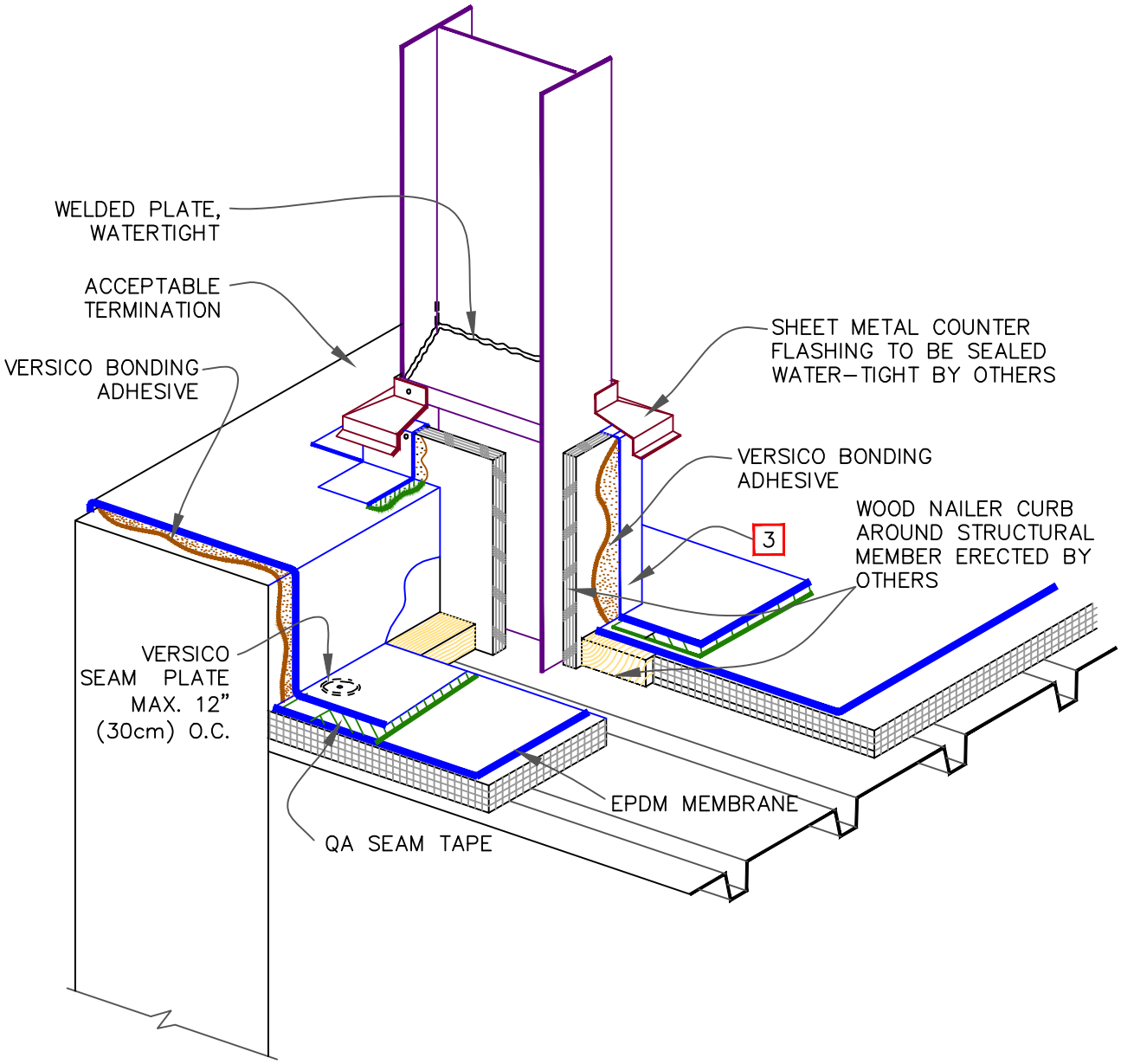

NOTES:

1. FOR PARAPET FLASHING, REFER TO DETAIL(S) VGC-12.
2. FOR CURB FLASHING, REFER TO DETAIL(S) VGC-5.
3. FOR CORNER APPLICATION, REFER TO DETAIL(S) VGC-15.

MAXIMUM WARRANTY: 30 YEARS

VERSICO ROOFING SYSTEMS

© 2024 VERSICO

I-BEAM PENETRATION

→ EPDM MEMBRANE
→ APPROVED SUBSTRATE
0 → SEE NOTE(S)

THERMOSET ROOFING SYSTEM

VGC-30

VERSIWELD TPO

Mechanically Attached and Fully Adhered Roofing Systems

January 2024

TABLE OF CONTENTS

Part I – General

1.01 Description 3
1.02 General Design Considerations 3
1.03 Quality Assurance 5
1.04 Submittals 6
1.05 Warranty 7

Warranty Tables

TABLE I - Warranty Options and Minimum Membrane Thickness 8
TABLE II – Mechanically Attached TPO – Membrane Fastening – Steel/Concrete Decks 9
TABLE III – Mechanically Attached TPO – Membrane Fastening – Wood Decks 10
TABLE IV – Mechanically Attached TPO – Membrane Fastening – Lightweight/Gypsum/Wood Fiber Decks 11
TABLE V – Fully Adhered TPO – Underlayment/Fastening – Up to 20 YR Warranties 12
TABLE VI – Fully Adhered QA TPO – Underlayment/Fastening – Up to 20 YR Warranties 14
TABLE VII – Fully Adhered TPO – Underlayment/Fastening – 25/30 YR Warranties 16
TABLE VIII – Fully Adhered QA TPO – Underlayment/Fastening – 25/30 YR Warranties 17

1.06 Job Conditions 18
1.07 Product Delivery Storage and Handling 19

Part II – Product

2.01 General 20
2.02 Membranes 20
2.03 Insulations/Underlayments 22
2.04 Related Materials 26
2.05 Fastening Components 28
2.06 Insulation Securement Adhesive 30
2.07 Vapor/ Air Barrier 30
2.08 Edgings/Terminations 31
2.09 Roof Walkways 31
2.10 Other Versico Accessories 32

Part III – Execution

3.01 General 33
3.02 Roof Deck/Substrate Criteria 33
3.03 Insulation/Underlayment 35
3.04 Insulation Attachment 35
3.05 Membrane Placement and Securement Criteria 37
3.06 Heat Welding Procedures 42
3.07 Welding Problems/Repairs 44
3.08 Flashings 44
3.09 Roof Walkways 46
3.10 Daily Seal 46

Attachments

Attachment I – Induction Welding Attachment Method 49
Attachment II – TPO Flashing Procedures utilizing VersiGard White EPDM Products 61
Installation Details 75

Note: In addition to information listed in this section Specifiers and Authorized contractors should reference Spec Supplement and Design Reference Sections for other pertinent information.

VERSICO
ROOFING SYSTEMS

This page intentionally blank

VersiWeld® TPO
Mechanically Attached and Fully Adhered Roofing Systems

January 2024

The information contained in this generic specification represents a part of Versico's requirements for obtaining a roofing system warranty. Construction materials and practices, building siting and operation, climatic conditions, and other site-specific factors will have an impact on the performance of the roofing system. Versico recommends that the building owner retain a design professional to determine appropriate design measures to be taken in order to address these factors.

This section is to serve as criteria for Specifiers and Authorized Contractors regarding the design and installation of Versico's Fully Adhered and Mechanically Attached Thermoplastic Membrane Roofing Systems. Additional information essential for the design and installation of the roof system mentioned herein are also included in the Design Reference Section and also listed in the form of a Specification Supplement at the end of the Technical Manual. Specifiers and Authorized Contractors are advised to reference all applicable sections.

Various Warranty Tables have been included in Paragraph 1.05 citing various requirements by which specific warranty coverage can be obtained. Appropriate Warranty Table should be referenced to ensure proper warranty coverage.

PART I – GENERAL

1.01 Description

A. Mechanically Attached Systems (VersiWeld)

1. The **VersiWeld Mechanically Attached Roofing System** incorporates 12', 10' or 8' wide, white, tan or gray 45, 60, or 80-mil thick scrim-reinforced, VersiWeld Thermoplastic Polyolefin (TPO) membrane field sheets (also available in special colors in 60-mil thick, maximum 10' wide sheets). Insulation is mechanically attached to an acceptable roof deck. VersiWeld perimeter sheets (6' used with 10' and 12' wide field sheets; 4' used with 8' wide field sheets) are installed along building edges and field membrane sheets are Mechanically Attached to the roof deck with the appropriate Versico fasteners and fastening plates. Adjoining sheets of VersiWeld membrane are overlapped and joined together with a minimum 1-1/2" wide heat weld. Membrane fastening requirements are outlined in Warranty Tables in Paragraph 1.05 of this Specification.

NOTE: The VersiWeld Roofing System may be specified utilizing the RhinoBond attachment method, refer to Attachment I, at the end of this specification for additional information.

NOTE: The VersiWeld Roofing System may be specified over an existing standing seam, flat seam or corrugated metal roof (mechanically attached systems incorporate membrane securement into the structural purlins). **Refer to the Metal Retrofit Roofing System Specification**, published separately, for applicable requirements.

B. Fully Adhered Roofing Systems (VersiWeld / VersiWeld QA TPO)

1. The **VersiWeld Fully Adhered Roofing System** incorporates maximum 16' wide white, gray or tan 45, 60 or 80-mil thick scrim-reinforced VersiWeld Thermoplastic Polyolefin (TPO) membrane (also available in special colors in 60-mil thick, maximum 10' wide sheets). Versico Insulation is mechanically attached to the roof deck or secured with Flexible DASH Adhesive, OlyBond 500 BA, or OlyBond Spot Shot Adhesive and the membrane is fully adhered to the insulation with the appropriate VersiWeld Bonding Adhesive. Adjoining sheets of membrane are overlapped approximately 2" and joined together with a minimum 1-1/2" wide heat weld.

2. The **VersiWeld QA TPO (Quick-Applied TPO) membrane** is a heat-weldable single-ply thermoplastic polyolefin (TPO) sheet available in 10' wide, (white, tan or gray) 60 or 80-mil thick reinforced TPO membrane laminated to an elastomeric pressure-sensitive adhesive.

1.02 General Design Considerations

Various Warranty Tables have been included in Paragraph 1.05 citing various requirements by which specific warranty coverage can be obtained. Appropriate Warranty Table should be referenced to ensure proper warranty coverage.

A. The maximum roof slope for Mechanically Attached Roofing Systems is 18" in one horizontal foot. There are no maximum slope restrictions for the application of the Fully Adhered Roofing System.

B. The mechanically attached roofing system is **not acceptable** for installations on steel decks lighter than 22 gauge unless the steel deck is used in conjunction with lightweight concrete and a minimum of 360 pounds pullout per fastener is achieved with HPVX Fasteners into the steel deck below. A Fully Adhered Roofing System may be specified or refer to the Metal Retrofit Roofing System Specification, published separately for other roofing options.

C. Certain petroleum based products, chemicals, and waste products may not be compatible with these roofing membranes. Contact Versico for verification of compatibility and recommendations concerning an acceptable roofing membranes.

D. Metal-Edge Systems and Copings should be designed in compliance with Section 1504.5 of the International Building Code and shall be tested in accordance with ANSI/SPRI ES-1.

E. Concentrated loads from rooftop equipment may cause deformation of insulation/underlayment and possible damage to the membrane if proper protection is not provided. A protection course or sleepers must be specified.

F. It is the responsibility of the specifier to review local, state and regional codes to determine their impact on the specified Versico Roofing System.

G. It is the responsibility of the building owner or his/her designated representative to verify structural load limitation. In addition, a core cut may be taken to verify weight of existing components when the roofing system is to be specified on an existing facility.

H. **Construction Generated Moisture / Vapor Drive**

1. On new construction projects, especially in cold climate regions, moisture generated due to the construction process could adversely impact various components within the roofing assembly if not addressed. Refer to **Design Reference DR-01-21" Construction Generated Moisture"** included in the Versico Technical Manual.

2. On structural concrete decks, when a vapor retarder is not used, gaps in the deck along the perimeter and around penetrations must be sealed along with vertical joints between tilt-up panels, if present, to prevent infiltration of hot humid air and possible moisture contamination resulting from condensation. This is specifically important when adhesive is used to attach the roof insulation.

NOTE: If left unaddressed, collected moisture could weaken insulation boards and facers resulting in a blow-off or increase the probability of mold growth.

I. **Vapor Retarders**

1. Versico does not require a vapor retarder for the protection of the membrane; however, it should be considered by the specifier for the protection of the roofing assembly (i.e. primarily insulation, underlayment and adhesives). The following criteria should be considered by the specifier:

2. Use of a vapor retarder to protect insulation and reduce moisture accumulation within an insulated roofing assembly, should be investigated by the specifier.

3. In the generally temperate climate of the United States, during the winter months, water vapor flows upward from a heated, more humid interior toward a colder, drier exterior. Vapor retarders are more commonly required in northern climates than in southern regions, where downward vapor pressure may be expected and the roofing membrane itself becomes the vapor retarder.

J. **Drainage**

1. Drainage must be evaluated by the specifier in accordance with all applicable codes. Slopes may be provided by tapering the structure or through the use of tapered insulation; a sufficient number of roof drains should also be specified and properly located to allow for positive drainage. Significant ponding that could remain after 48 hours should be eliminated with the addition of auxiliary drains in low areas where ponding is anticipated.

   Versico specifically disclaims responsibility for the design and selection of an adequate drainage system and drain accessories. Selection must be made by the building owner or the owner's design professional.

2. Small incidental areas of ponded water will not impact the performance of this roofing system; however, in accordance with industry standards, the roofing assembly **should be designed to prevent ponding** of water on the roof for prolonged periods (longer than 48 hours). Good roofing practice dictates proper drainage to prevent possible excessive live load and, in the event of a roof leak, to minimize potential interior damage to the

roofing assembly and to the interior of the building.

3. **Tapered edge strips, crickets or saddles** are recommended where periodic ponding of water may occur. When the slope of the taper exceeds 2 inches to one horizontal foot, additional membrane securement at the base of the tapered edge strip will be required.

4. Subject to code requirement, it is recommended that a minimum roof slope of 1/8” per horizontal foot be provided to serve long-term aesthetics. On new construction projects, roof drains should be positioned in areas where minimum deflection is anticipated. Slopes greater than 1/8” per foot should be considered due to possible roof deflection.

K. **Retrofit - Recover Projects** (when the existing roofing material is left in place)

1. The removal of existing wet insulation and membrane must be specified. The specifier shall select an appropriate and compatible material as filler for voids created by removal of old insulation or membrane.

2. Entrapment of water between old and new membrane can damage and deteriorate new insulation/underlayment between the two membranes. **If a vapor retarder or air barrier is not specified**, Versico recommends existing membrane be perforated to avoid potential moisture accumulation to allow for detection of moisture to enable the building owner to take corrective action. This can be accomplished by drilling approximately 3/4" diameter holes every 100 square feet in the existing built-up roof or single-ply membrane (excluding non-reinforced PVC membrane).

3. If total removal of existing non-reinforced PVC membrane is not specified, existing membrane may be cut into maximum 10' x 10' sections, when the new insulation or membrane underlayment is to be mechanically attached.

4. Regardless of the type of membrane or assembly selected, any loose flashings at the perimeter, roof drains and roof penetrations must be removed.

1.03 Quality Assurance

Building codes are above and beyond the intended purpose of this specification. The building **owner, owner’s representative** or **Specifier** should verify local codes for applicable requirements and limitations. It is the responsibility of the specifier to review local, state and regional codes to determine their impact on the specified Versico Roofing System.

NOTE: For code approvals achieved with the Versico Roofing Systems, refer to the Versico Code Approval Guide, DORA (Directory of Roof Assemblies), Factory Mutual (FM) Approval Guide or Underwriters Laboratories (UL) Fire Resistance or Roofing Materials and Systems Directories.

A. When recovering or retrofitting an existing roof system, the addition of new insulation (type and thickness) may alter the fire performance characteristics of the assembly. Building owners or their designated representatives shall consult the local code enforcement agency to avoid potential code violation.

B. Versico recommends the use of Versico supplied products for use with VersiWeld/VersiFlex Roofing Systems. The performance or integrity of products by others, **when selected by the specifier and accepted as compatible by Versico**, is not the responsibility of Versico and is **expressly disclaimed** by the Versico warranty.

C. This roofing system must be installed by a Versico Authorized Roofing Contractor in compliance with drawings and specifications as approved by Versico.

D. There must be no deviations made from Versico's specifications or Versico's approved shop drawings without the **PRIOR WRITTEN APPROVAL** of Versico.

E. After completion of the installation, upon request, an inspection shall be conducted by a Technical Representative of Versico to ascertain that the membrane roofing system has been installed according to Versico's published specifications and details applicable at the time of bid. This inspection is to determine whether a warranty shall be issued. It is not intended as a final inspection for the benefit of the owner.

F. Coordination between various trades is essential to avoid unnecessary rooftop traffic over completed sections of the roof and to prevent subsequent damage to the membrane roofing system.

G. Provide polyisocyanurate insulation that meets PIMA Quality Mark Certified LTTR value through third party verification meeting ASTM C 1289, Type II, Class 1, Grade 2.

H. The solar reflectance of this roofing product may decrease over time due to environmental defacement such as dirt, biological growth, ponded water, etc. The roof should be monitored at regular intervals and maintained or cleaned when necessary to assure the maximum solar reflectance.

I. Refer to the **Design Reference DR-07-23 "CRRC/LEED Information"** for information. (i.e. solar emittance, solar reflectance and recycled content)

1.04 Submittals

A. To ensure compliance with Versico's minimum warranty requirements, the following projects should be forwarded to Versico for review prior to installation, preferably prior to bid:

1. Air pressurized buildings, canopies and buildings with large openings where the total wall openings exceed 10% of the total wall area on which the openings are located (such as airport hangars, warehouses and large maintenance facilities).

2. Cold storage buildings and freezer facilities.

3. Fully Adhered Roofing System projects over 250' in height (maximum 15 year warranties) and 100' in height (warranties greater than 15 years).

4. Mechanically Attached Roofing System projects over 100' in height regardless of warranty duration.

5. Projects where the VersiWeld or VersiFlex membrane is expected to come in direct contact with petroleum-based products or other chemicals.

6. Mechanically Attached systems specified with a fastener length exceeding 12 inches.

B. Along with the project submittals (shop drawings and Request for Warranty), the roofing contractor must include pullout tests when results are below the requirements identified in this specification.

C. Shop drawings must be submitted to Versico by the Versico Authorized Roofing Contractor along with a completely executed Copy-A Job Approval Request for approval. Approved shop drawings are required for inspection of the roof and on projects where on-site technical assistance is requested.

Shop drawings must include:
1. Outline of roof and size
2. Deck type (for multiple deck types)
3. Location and type of **all** penetrations
4. Perimeter and penetration details
5. Key plan (for multiple roof areas) with roof heights indicated
6. Sheet width and number of perimeter sheets for Mechanically Attached systems
7. Fastener type, length and maximum spacing (for membrane securement) for Reinforced Mechanically Attached systems.

Along with the project submittals (shop drawing and Request for Warranty), the roofing contractor must include **pullout test** results when the results are below the requirements identified in, Table included in **Design Reference DR-06-19 "Withdrawal Resistance Criteria"**.

When field conditions necessitate modifications to originally approved shop drawings, a copy of the shop drawing outlining all modifications must be submitted to Versico for revision and approval prior to inspection and warranty issuance.

D. **As-Built Projects** (roofing systems installed prior to project approval by Versico)

The Versico Authorized Contractor may supply Versico with an As-Built drawing for a project completed prior to Versico's approval. The As-Built drawings:
1. Must conform to Versico's most current published specifications and details applicable at the time of bid.
2. Must be submitted along with a completely executed Copy-B Job Completion.
3. Must include the items identified in Paragraph 1.04.C.

NOTE: As-Built projects are not recommended for those projects referenced in Paragraph 1.04A in order to ensure Versico warranty requirements have been met.

E. **Copy-B Job Completion**

After project completion, a Copy-B - Job Completion Date must be submitted to Versico to schedule the necessary inspection of the project prior to issuance of the Versico Warranty.

1.05 Warranty

A. A Total System Warranty is available for roofing systems on commercial buildings within the United States and applies only to **products marketed by Versico**. The total system is defined as membrane, flashings, adhesives, sealants and other Versico brand products utilized in the installation. For a complete description of these products, refer to the Part II "Products" Section in this Specification and **Spec Supplement "Related Products" P-01-22**.

B. See Tables Below for information regarding Warranted Systems and Design Criteria:

1. **TABLE I – Minimum Membrane Thickness for Various Warranty Options** Identifies minimum membrane thickness for Reinforced membranes used in fully adhered or mechanically attached roofing systems.

2. **TABLE II - Mechanically Attached Roofing Systems – TPO Membrane Fastening Criteria - Steel/Concrete Decks** Identifies fastening density, field membrane width and number perimeter sheets required for the various wind zones. The assemblies are categorized based on various building height and specific wind speed warranty coverage.

3. **TABLE III - Mechanically Attached Roofing Systems – TPO Membrane Fastening Criteria - Wood Decks** Identifies fastening density, field membrane width and number perimeter sheets required for the various wind zones. The assemblies are categorized based on various building height and specific wind speed warranty coverage.

4. **TABLE IV - Mechanically Attached Roofing Systems – TPO Membrane Fastening Criteria – Up to 20 Yrs - Lightweight Insulating Concrete over Steel/Gypsum/Cementitious Wood Fiber Decks** Identifies fastening density, field membrane width and number perimeter sheets required for the various wind zones. The assemblies are categorized based on various building height and specific wind speed warranty coverage.

5. **TABLE V - Fully Adhered Roofing Systems - Underlayment and Fastening Density for TPO Assemblies with Warranties Up to 20 Yrs** Identifies required underlayments for fully adhered roofing systems with Warranties up to 20 years based on the various wind speed coverages available. The Table also identifies fastening density or adhesive bead spacing and required edge terminations.

6. **TABLE VI – Fully Adhered Roofing Systems - Underlayment and Fastening Density for VersiWeld QA Assemblies with Warranties Up to 20 Yrs** Identifies required underlayments for fully adhered roofing systems with Warranties up to 20 years based on the various wind speed coverages available. The Table also identifies fastening density or adhesive bead spacing and required edge terminations.

7. **TABLE VII – Fully Adhered Roofing Systems – Underlayment and Fastening Density for TPO Assemblies with Warranties – 25 to 30 YR** Identifies required underlayments for fully adhered roofing systems with Warranties from 25 to 30 years based on the various wind speed coverages available. The Table also identifies fastening density or adhesive bead spacing and required edge terminations.

8. **TABLE VIII – Fully Adhered Roofing Systems - Underlayment and Fastening Density for VersiWeld QA Assemblies with Warranties – 25 to 30 YR** Identifies required underlayments for fully adhered roofing systems with Warranties from 25 to 30 year based on the various wind speed coverages available. The Table also identifies fastening density or adhesive bead spacing and required edge terminations.

Table I

Mechanically Attached or Fully Adhered Membrane Systems Warranty Options (6)

Years	Thermoplastic Membranes (VersiWeld)							
	55, 72, 80 or 90 mph		100 mph		110 to 120 mph		Minimum Membrane Thickness (2)	Additional Hail/Puncture Coverage
	Fully Adhered	Mech. Attached	Fully Adhered	Mech. Attached	Fully Adhered	Mech. Attached		
5,10, or 15 year	√	√	√	N/A(1)	√	N/A	VersiWeld 45-mil	See Below
20 year	√(3)	√	√	N/A	√	N/A	VersiWeld 60-mil (4)	See Below
25 year (6)	√	√	√	N/A	N/A	N/A	VersiWeld 80-mil (5)	See Below
30 year (6)	√	√	√	N/A	N/A	N/A	VersiWeld 80-mil (5)	See Below

Notes: N/A = Not Acceptable √= Acceptable

(1) Contact Versico for specific requirements.
(2) All "T-joints" must be overlaid with appropriate flashing material when using 60- or 80-mil TPO membrane.
(3) Aqua Base 120 adhesive may be used for projects with 20 year maximum warranty and wind speed coverage up to 72 mph. Hydrobond Adhesive may be used for projects with 20 year maximum warranty and wind speed coverage up to 90 mph.
(4) VersiWeld QA TPO 60-mil membranes may be used. VersiWeld 80-mil TPO in Special Colors are limited to Warranties Up to 20 Year.
(5) VersiWeld QA TPO 80-mil membrane can be used in lieu of VersiWeld 80-mil membrane.
(6) Enhancements may be required for certain flashing details. Publish details must be referenced for applicable requirements.

VersiWeld TPO Membrane
Hail
- 1” Dia. Hail Coverage requires a minimum of 60-mil TPO Adhered to cover board.
- 2” Dia. Hail Coverage requires 80-mil TPO Adhered to cover board.

Additional Design Requirement:
- Cover board (SecurShield HD, SecurShield HD Plus, SecurShield HD or DuraFaceR Composite, DensDeck Prime, DensDeck StormX Prime, or Securock – Adhered Only).

Puncture
- Minimum 80-mil TPO Adhered or Mechanically Fastened.

TPO Membrane Fastening Criteria (All Warranties)
for Mechanically Attached Roofing Systems
Table II — 22 GA. Steel Deck or Structural Concrete Only

CAUTION: Projects with 25 or 30 year warranties an additional perimeter sheet is required beyond those listed in the table below.

Projects with 25 or 30 year warranties the use of 12' wide sheets is **NOT PERMITTED**.

Peak Gust Wind Speed Warranty	Max. Building Height	Min. Number of Perimeter Sheets — Building Distance from Coastline: Greater than 7 miles	3 to 7 miles	Less than 3 miles	Field* Membrane Width	Perimeter* Sheet Width	Fastening Density* (Field & Perimeter Sheets)
55 MPH	Up to 60'	1	2	3	12' or 10'	6'	12" O.C.
					8'	4'	12" O.C.
	61' to 100'	2	2	3	10'	6'	** See Note
					8'	4'	12" O.C.
72 MPH	Up to 60'	2	2	3	12' or 10'	6'	12" O.C.
					8'	4'	12" O.C.
	61' to 100'	3	4	4	10'	6'	** See Note
					8'	4'	12" O.C.
80 MPH	Up to 60'	3	3	4	10'	6'	** See Note
					8'	4'	12" O.C.
	61' to 100'	3	4	4	10'	6'	** See Note
					8'	4'	12" O.C.
90 MPH	Up to 60'	3	4	4	10'	6'	** See Note
					8'	4'	12" O.C.
	61' to 100'	4	5	5	10'	6'	** See Note
					8'	4'	12" O.C.

*Using HPVX Fasteners for steel decks and MP 14-10 or CD-10 for structural concrete decks.

** Structural Concrete Decks use 12" O.C. spacing utilizing MP 14-10 or CD-10. Steel Decks use 6" O.C. utilizing HPVX Fasteners. Steel Decks use 12" O.C. spacing utilizing HPV-XL Fasteners.

TPO Membrane Fastening Criteria
(Up to 20 Year Warranty – Up to 60' Building Height)
for Mechanically Fastening Roofing Systems
Wood (Plywood or OSB) Decks

Table III

Wood (Plywood or OSB) Decks **Peak Gust Wind Speed Warranty**	**Deck Type**	**Projected Pull-Out Values**	**Min. Number of Perimeter Sheets**			**Field Membrane Width**	**Perimeter Sheet Width**	**Fastening Density (Field & Perimeter Sheets)**
			Building Distance from Coastline					
			Greater than 7 miles	3 to 7 miles	Less than 3 miles			
55 MPH	7/16" OSB	210 lbs	2	3	3	10'	5'*	9" O.C.
			2	3	3	8'	5'*	12" O.C.
	15/32" 3-Ply Plywood	240 lbs	2	2	3	8'	5'*	12" O.C.
	15/32" 5-Ply Plywood	530 lbs	1	1	1	10'	6.5'	12" O.C.
	5/8" OSB	310 lbs	2	3	3	10'	5'*	12" O.C.
			2	3	3	8'	5'*	12" O.C.
72 MPH	15/32" 3-Ply Plywood	240 lbs	2	2	3	8'	5'*	12" O.C.
	15/32" 5-Ply Plywood	530 lbs	1	1	1	10'	6.5'	12" O.C.
	5/8" OSB	310 lbs	2	3	3	10'	5'*	12" O.C.
			2	3	3	8'	5'*	12" O.C
80 MPH	*Contact Versico for Approval and Evaluation*							

* Maximum duration for OSB NOT to exceed 20 Years.

Table IV

TPO Membrane Fastening Criteria
Up to 20 Yr Warranty for Mechanically Attached Roofing Systems
Lightweight Insulating Concrete over Steel/Gypsum/Cementitious Wood Fiber

Peak Gust Wind Speed Warranty	Building Height 50' Max.	Min. Number of Perimeter Sheets			Field Membrane Width	Perimeter Sheet Width	Fastening Density (Field & Perimeter Sheets)
		Building Distance from Coastline					
	Deck Type	Greater than 7 miles	3 to 7 miles	Less than 3 miles			
55 MPH	Lightweight Concrete over Steel Deck	2	3 (1)	N/A	12'	6'	12" O.C.
		1	2	4	10'	6'	12" O.C.(2)
		1	2	3	8'	4'	12" O.C.(3)
	Gypsum Deck or Cementitious Wood Fiber	2 (3)	3	N/A	10'	6'	9" O.C.
		2 (3)	3	4 (4)	8'	4'	12" O.C.

N/A is Not Acceptable
(1) Fastening Density must be secured 6" O.C.
(2) For Buildings 51' to 75' with 10' field sheets – Fastening Density must be secured 9" O.C.
(3) Acceptable for Buildings up to 75' in height.
(4) Fastening Density must be secured 9" O.C.

Additional Design Considerations

1-Membrane configuration and fastening density in Table above is based on HPVX Fasteners penetrating metal pan below Lightweight Insulating Concrete and for Polymer Gyptec Fasteners engaging into Gypsum and Cementitious Fiber Decks.
2-See **Design Reference DR-06-19 "Withdrawal Resistance Criteria"** for more information.

Table V — Underlayment/Insulation & Required Attachment Assemblies Up to 20 YR Warranty for TPO Fully Adhered Roofing Systems

Other Requirements are Listed in Additional Design Considerations following this Table
All Versico Products listed for higher wind speed coverage can also be used for Warranties with lower wind speed coverage. (i.e. 72 MPH underlayment may be used for 55 MPH underlayment)

Peak Gust Wind Speed Warranty	Minimum Membrane Underlayment*	Insulation Attachment			Metal Edging
		# of Fasteners per 4' x 8' board size (1)	Adhesive Ribbon Spacing for 4' x 4' size board		
			Field	Perimeter	
55 or 72 MPH	1" (20 psi) Polyisocyanurate	16(11)	12" (6)(7)	6" (6)	VersiTrim Drip Edge or VersiTrim 200
	1-1/2" (20 psi) Polyisocyanurate	10			
	2"(20 psi) Polyisocyanurate	8			
	1/2" SecurShield HD (3)	12			
	1/4" DensDeck Prime or 1/4" Securock	12			
80 MPH	1/2" SecurShield HD Plus (3)	8	12" (6)(7)(8)	6" (6)(8)	VersiTrim Drip Edge or VersiTrim 200 (12)
	1/2" Versico Recovery Board (2)	16			
	2" SecurShield HD Composite	6			
	1/2" DensDeck Prime or 1/2" Securock (2)	8			
	1-1/2" (25-psi) Polyisocyanurate	10			
	2" (25 -psi) Polyisocyanurate	8			
90 MPH	1/2" DensDeck Prime or 1/2" Securock (2)	12	6"(10)	6"(8)(9)	VersiTrim Drip Edge (4), VersiTrim 200 (4)(5) or VersiTrim 2000 or 3000.
	1/2" SecurShield HD (3) or 1-1/2" (20-psi) SecurShield Polyiso	16			
	1/2" SecurShield HD Plus (3)	12			
	2" (20-psi) SecurShield or 2" SecurShield HD Polyiso Composite	8			
	1-1/2" DuraFaceR (OSB/Polyiso Composite) or 1/2" DuraStorm VSH (2)	8			
	1-1/2" Insulfoam HD Composite	16			
100 MPH	2" (25-psi) SecurShield Polyiso (1)	16	FS	FS	VersiTrim Drip Edge (4), VersiTrim 200 (4)(5) or VersiTrim 2000 or 3000.
110 MPH	1/2" SecurShield HD Plus (3)	16	FS	FS	VersiTrim 2000 or 3000
	1-1/2" DuraFaceR (OSB/Polyiso Composite) or 1/2" DuraStorm VSH (2)				
120 MPH	5/8" DensDeck Prime or 5/8" DensDeck StormX Prime or 5/8" Securock (2)	16	FS	FS	VersiTrim 2000 or 3000
	1-1/2" DuraFaceR (OSB/Polyiso Composite) (1) or 1/2" DuraStorm VSH	17			
	1/2" SecurShield HD Plus (3)	24			
	2" SecurShield HD Composite	16			

FS=Full Spray or Ribbons @ 4" O.C.
***For Direct Application over Wood Decks and Lightweight Cellular Concrete, Refer to Roof Deck & Substrate Criteria Table.**
(1) For Building heights between 51'-100', enhance 12'-wide perimeter with 50% more fasteners and plates.
(2) Cover boards must be installed over a min. 1" thick approved Versico Insulation.
(3) 1/2" SecurShield HD limited to 90 mph. 1/2" SecurShield HD Plus limited to 120 mph.
(4) Versico HPV or HPVX Fasteners must be used to secure VersiTrim Drip Edge or VersiTrim 200 Metal Fascia to perimeter wood nailers.
(5) Membrane securement is required at the base of the VersiTrim 200 waterdam.
(6) Gravel Surface BUR - Field @ 6" O.C. / Perimeter @ 4" O.C.
(7) Steel Decks - Field & Perimeter @ 6" O.C.
(8) Cementitious Wood Fiber - Field @ 6" O.C. / Perimeter @ 4" O.C.
(9) Smooth BUR - Field @ 6" O.C. / Perimeter @ 4" O.C.
(10) Gravel Surface BUR - 4" O.C.

(11) Reduced fastening (11 fasteners per 4 x 8 board) is acceptable on Reroof/No Tear off projects with a maximum roof height of 40'.
(12) May be fastened with ring shank nails staggered 4" on center. Versico HPV or HPVX Fasteners may also be used fastened 12" on center.

Additional Design Considerations

1 – Refer to Table I in paragraph 1.05 for available warranty options and applicable membrane thicknesses.
2 - Building height shall not exceed 100'*
3 - Local Wind Zone per ASCE 7 shall not exceed 130 mph*
4 - Acceptable decking: 22-gauge or heavier steel, structural concrete, 1-1/2" wood plank, or 15/32" plywood.

* Projects where building height exceeds 100', shall be submitted to Versico for review.

Underlayment/Insulation & Required Attachment Assemblies
Table VI Up to 20 YR Warranty for VersiWeld QA TPO Fully Adhered Roofing Systems

Other Requirements are Listed in Additional Design Considerations following this Table

All Versico Products listed for higher wind speed coverage can also be used for Warranties with lower wind speed coverage. (i.e. 72 MPH underlayment may be used for 55 MPH underlayment)

Peak Gust Wind Speed Warranty	Minimum Membrane Underlayment	Insulation Attachment			Metal Edging
		# of Fasteners per 4' x 8' board size (1)	Adhesive Ribbon Spacing for 4' x 4' size board		
			Field	Perimeter	
55 or 72 MPH	1" (20 psi) Polyisocyanurate	16 (9)	12" (4)(5)	6" (4)	VersiTrim Drip Edge or VersiTrim 200
	1-1/2" (20 psi) Polyisocyanurate	10			
	2"(20 psi) Polyisocyanurate	8			
	1/2" SecurShield HD (3)	12			
	1/4" DensDeck Prime or 1/4" Securock				
	2" (1.25 lb/density) Insulfoam SP*				
80 MPH	1/2" DensDeck Prime or 1/2" Securock (2)	8	12" (4)(5)(6)	6" (4)(6)	VersiTrim Drip Edge or VersiTrim 200 (10)
	1/2" SecurShield HD (3)	16			
	1/2" SecurShield HD Plus (3)	8			
	2" SecurShield HD Composite	6			
	1-1/2" (25-psi) Polyisocyanurate	11			
	2" (25 -psi) Polyisocyanurate	8			
	2" (1.25 lb/density) Insulfoam SP**	16	6" (4)(5)(6)	6" (4)(6)	
	1-1/2" Insulfoam HD Composite*	12	12" (8)	6" (6)(7)	
90 MPH	1/2" DensDeck Prime or 1/2" Securock (2)	12	6" (8)	6" (6)(7)	VersiTrim Drip Edge (11), VersiTrim 200 (11)(12) or VersiTrim 2000 or 3000.
	1/2" SecurShield HD (3) or 1-1/2" (20-psi) SecurShield Polyiso	16			
	1/2" SecurShield HD Plus (3)	12			
	1-1/2" DuraFaceR (OSB/Polyiso) Composite or 1/2" DuraStorm VSH	8			
	2" (20-psi) SecurShield Polyiso or 2" SecurShield HD Composite	8			
	1-1/2" Insulfoam HD Composite	16			
100 MPH	5/8" DensDeck Prime or 5/8" DensDeck StormX Prime or 5/8" Securock (2)	16	FS	FS	VersiTrimDrip Edge (11), VersiTrim 200 (11)(12) or VersiTrim 2000 or 3000
	1/2" SecurShield HD Plus (3)				
	1-1/2" DuraFaceR (OSB/Polyiso Composite) or 1/2" DuraStorm VSH				
	2" (25-psi) SecurShield Polyiso (1)				
	2" SecurShield HD Composite				

FS = Full Spray or Ribbons @ 4" O.C.
(1) For Building heights between 51'-100', enhance 12'-wide perimeter with 50% more fasteners and plates.
(2) Cover boards must be installed over a min. 1" thick approved Versico Insulation.
(3) 1/2" SecurShield HD limited to 90 mph. 1/2" SecurShield HD Plus limited to 120 mph.
(4) Gravel Surface BUR - Field @ 6" O.C. / Perimeter @ 4" O.C.
(5) Steel Decks - Field & Perimeter @ 6" O.C.
(6) Cementitious Wood Fiber - Field @ 6" O.C. / Perimeter @ 4" O.C.

(7) Smooth BUR - Field @ 6" O.C. / Perimeter @ 4" O.C.
(8) Gravel Surface BUR - 4” O.C.
(9) Reduced Fastening (11 fasteners per 4 x 8 board) is acceptable on Reroof / No Tear off projects with a maximum roof height of 40’.
(10) may be fastened with ring shank nails staggered 4" on center. Versico HPV or HPVX Fasteners may also be used fastened 12" on center.
(11)Versico HPV or HPVX Fasteners must be used to secure VersiTrim Drip Edge or VersiTrim 200 Metal Fascia to perimeter wood nailers.
(12) Membrane securement is required at the base of the VersiTrim 200 waterdam.
*Maximum warranty available 20 year.
** Maximum warranty available 15 year.

Additional Design Considerations

1 - Minimum membrane thickness 60-mil VersiWeld QA TPO
2 - Building height shall not exceed 100'*
3 - Local Wind Zone per ASCE 7 shall not exceed 130 mph*
4 - Acceptable decking: 22-gauge or heavier steel, structural concrete, 1-1/2" wood plank, or 15/32" plywood.
5 - All "T-joints" must be overlaid with appropriate flashing material or Versico “T-Joint” covers.

* Projects where building height exceeds 100' or warranty wind speed exceeds 100 mph, shall be submitted to Versico for review.

Table VII — Underlayment/Insulation & Required Attachment Assemblies 25 YR or 30 YR Warranty for Fully Adhered TPO Roofing Systems

Other Requirements are Listed in Additional Design Considerations following this Table.

All Versico Products listed for higher wind speed coverage can also be used for Warranties for lower wind speed coverage. (i.e. 72 MPH underlayment may be used for 55 MPH underlayment)

Peak Gust Wind Speed Warranty	Minimum Membrane Underlayment	Insulation Attachment			Metal Edging
		# of Fasteners per 4' x 8' board size (1)	Adhesive Ribbon Spacing for 4' x 4' size board		
			Field	Perimeter	
55 or 72 MPH	1" to 2" (25 psi) Polyisocyanurate	16	6" (3)(5)	6" (5)	VersiTrim Drip Edge or VersiTrim 200
	1/2" Versico Recovery Board (1)(9)				
	1/4" DensDeck Prime or 1/4" Securock				
	1/2" SecurShield HD (2)				
80 MPH	1-1/2" to 2" (25-psi) SecurShield Polyisocyanurate	20	6" (4)(5)(6)	6" (5)(6)	VersiTrim Drip Edge (7), VersiTrim 200 (7)(8) or VersiTrim 2000 or 3000
	1/2" DensDeck Prime or 1/2" Securock (2)	16			
	1/2" SecurShield HD Plus (2)				
	1/2" SecurShield HD (2)	20			
90 MPH	1/2" SecurShield HD (2)	24	FS	FS	VersiTrim Drip Edge (7), VersiTrim 200 (7)(8) or VersiTrim 2000 or 3000
	1/2" SecurShield HD Plus (2)	20			
	1/2" DensDeck Prime or 1/2" Securock (2)				
100 MPH	5/8" DensDeck Prime or 5/8" DensDeck StormX Prime or 5/8" Securock (2)	16	FS	FS	VersiTrim 2000 or 3000
	1-1/2" DuraFaceR (OSB/Polyiso Composite) or 1/2" DuraStorm VSH (2)				
	2" SecurShield HD Composite (2)				
	1/2" SecurShield HD Plus (2)	24			

FS = Full Spray or Ribbons @ 4" O.C.
(1) For Building heights between 51'-100', enhance 12'-wide perimeter with 50% more fasteners and plates.
(2) Hail coverage offered with substrate.
(3) Structural Concrete - Field @ 12" O.C. / Perimeter @ 6" O.C.
(4) 80-mph warranty wind speed coverage over Structural Concrete, Adhesive Ribbon Spacing, for Field & Perimeter shall be at 6" O.C.
(5) Cementitious Wood Fiber & Wood - 4" O.C.
(6) 80-mph warranty wind speed coverage over Gypsum Decks – Adhesive Ribbon spacing shall be at 4" O.C
(7) Versico HPV or HPVX Fasteners must be used to secure VersiTrim Drip Edge or VersiTrim 200 Metal Fascia to perimeter wood nailers.
(8) Membrane securement is required at the base of the VersiTrim 200 waterdam.
(9) 1/2" Recovery Board limited to 55 mph.

Additional Design Considerations

1 - Minimum membrane thickness 80-mil TPO
2 - Building height shall not exceed 100'*
3 - Local Wind Zone per ASCE 7 shall not exceed 130 mph*
4 - Acceptable decking: 22-gauge or heavier steel, structural concrete, 1-1/2" wood plank, or 15/32" plywood.
5 - All "T-joints" must be overlaid with appropriate flashing material or Versico "T-Joint" covers.
6- New construction or complete tear-off of existing roofing material.
7- Enhancements are required for certain flashing s details. Publish details must be referenced for applicable requirements.
* Projects where building height exceeds 100' or warranty wind speed exceeds 100 mph, shall be submitted to Versico for review.

Table VIII Underlayment/Insulation & Required Attachment Assemblies 25 YR OR 30 YR Warranty for VersiWeld QA TPO Fully Adhered Roofing Systems

Other Requirements are Listed in Additional Design Considerations following this Table

All Versico Products listed for higher wind speed coverage can also be used for Warranties with lower wind speed coverage. (i.e. 72 MPH underlayment may be used for 55 MPH underlayment)

Peak Gust Wind Speed Warranty	Minimum Membrane Underlayment	Insulation Attachment			Metal Edging
		# of Fasteners per 4' x 8' board size (1)	Adhesive Ribbon Spacing for 4' x 4' size board		
			Field	Perimeter	
55 or 72 MPH	1" to 2" (25 psi) Polyisocyanurate	16	6" (3)(5)	6" (5)	VersiTrim Drip Edge or VersiTrim 200
	1/4" DensDeck Prime or 1/4" Securock				
	1/2" SecurShield HD (2)				
80 MPH	1-1/2" to 2" (25-psi) SecurShield Polyisocyanurate	20	6" (4)(5)(6)	6" (5)(6)	VersiTrim Drip Edge (7), VersiTrim 200 (7)(8) or VersiTrim 2000 or 3000
	1/2" DensDeck Prime or 1/2" Securock (2)	16			
	1/2" SecurShield HD Plus (2)				
	1/2" SecurShield HD (2)	20			
90 MPH	1/2" SecurShield HD (2)	24	FS	FS	VersiTrim Drip Edge (7), VersiTrim 200 (7)(8) or VersiTrim 2000 or 3000
	1/2" SecurShield HD Plus (2)	20			
	1/2" DensDeck Prime or 1/2" Securock (2)				
100 MPH	5/8" DensDeck Prime or 5/8" DensDeck StormX Prime or 5/8" Securock (2)	16	FS	FS	VersiTrim 2000 or 3000
	1-1/2" DuraFaceR (OSB/Polyiso Composite) or 1/2" DuraStorm VSH (2)				
	2" SecurShield HD Composite (2)				
	1/2" SecurShield HD Plus (2)	24			

FS = Full Spray or Ribbons @ 4" O.C.
(1) For Building heights between 51'-100', enhance 12'-wide perimeter with 50% more fasteners and plates.
(2) Hail coverage offered with this substrate.
(3) Structural Concrete – Field@ 12" O.C. / Perimeter @ 6" O.C.
(4) 80-mph over structural concrete – Field & Perimeter @ 6" O.C.
(5) Cementitious Wood Fiber & Wood - FS
(6) 80-mph warranty wind speed coverage over Gypsum Decks- Adhesive Ribbon Spacing shall be @ 4" O.C.
(7) Versico HPV or HPVX Fasteners must be used to secure Versico VersiTrim 200 Metal Fascia to perimeter wood nailers
(8) Membrane securement is required at the base of the VersiTrim 200 waterdam

Additional Design Considerations (25 YR or 30 YR Warranty)

1 - Minimum membrane thickness 80-mil VersiWeld QA TPO
2 - Building height shall not exceed 100'*
3 - Local Wind Zone per ASCE 7 shall not exceed 130 mph*
4 - Acceptable decking: 22-gauge or heavier steel, structural concrete, 1-1/2" wood plank, or 15/32" plywood.
5 - All "T-joints" must be overlaid with appropriate flashing material or Versico "T-Joint" covers.
6- New construction or complete tear-off of existing roofing material.
* Projects where building height exceeds 100' or warranty wind speed exceeds 100 mph, shall be submitted to Versico for review.

C. **Access for warranty service**

It shall be the owner's responsibility to expose the membrane in the event that warranty service is required when access is impaired. Such impairment includes, but is not necessarily limited to:

1. Design features, such as window washer systems, which require the installation of traffic surface units in excess of 100 pounds per unit.

2. Any equipment, ornamentation, building service units and other top surfacing materials which are not defined as part of this specification.

3. Photovoltaic and Mounting systems or other Rooftop equipment that does not provide Versico with reasonable access to the membrane system for purposes of warranty investigation and related repairs.

4. Severely ponded conditions.

CAUTION: APPLICATIONS SUCH AS WALKING DECKS, TERRACES, PATIOS OR AREAS SUBJECTED TO CONDITIONS NOT TYPICALLY FOUND ON ROOFING SYSTEMS WILL **NOT** BE ELIGIBLE FOR A MEMBRANE SYSTEM WARRANTY.

D. The formation or presence of mold or fungi in a building is dependent upon a broad range of factors including, but not limited to, the presence of spores and nutrient sources, moisture, temperatures, climatic conditions, relative humidity, and heating/ventilating systems and their maintenance and operating capabilities. These factors are beyond the control of Versico and Versico shall not be responsible for any claims, repairs, restoration or damages relating to the presence of any irritants, contaminants, vapors, fumes, molds, fungi, bacteria, spores, mycotoxins, or the like in any building or in the air, land, or water serving the building.

1.06 Job Conditions

A. On phased roofing, temporary closures should be provided to prevent moisture infiltration. When a temporary roof is specified, Versico 725-TR in conjunction with CCW-702, CCW-702 LV or CAV-GRIP 3V Low-VOC Adhesive/Primer may be used. Refer to Product Section Part II for additional product information and **Specification Supplement G-07-20**.

B. When possible on multiple level roofs, begin the installation on the highest level to avoid or minimize construction traffic on completed roof sections.

C. On projects at high altitudes (6,000' and above) rapid flash-off (drying) of Adhesives will occur due to low atmospheric pressure.

D. When roof slopes exceed 5 inches per horizontal foot, use of an Automatic Heat Welder may be more difficult. A Hand Held Hot Air Welder should be specified.

E. Vapor Retarders

1. Versico does not require a vapor retarder for the protection of the membrane; however, the following criteria should be considered by the specifier:

   a) Use of a vapor retarder to protect insulation and reduce moisture accumulation within an insulated roofing assembly, should be investigated. Consult latest publications by ASHRAE (American Society of Heating, Refrigerating and Air-Conditioning Engineers, Inc.) and NRCA (National Roofing Contractors Association) for specific information.

   b) In the generally temperate climate of the United States, during the winter months, water vapor flows upward from a heated, more humid interior toward a colder, drier exterior. Vapor retarders are more commonly required in northern climates than in southern regions, where downward vapor pressure may be expected and the roofing membrane itself becomes the vapor retarder.

   c) On cold storage/freezer facilities, the perimeter and penetration details must be selected to provide an air seal and prevent outside air from infiltrating and condensing within the roofing assembly.

2. When a vapor retarder is specified, Versico 725TR Air and Vapor Barrier may be used. Refer to Part II “Products” for necessary information and **Spec Supplement G-07-20 “Application Procedures for 725TR Air and Vapor Barrier”** for product Installation.

F. Wood nailers are required for the securement of metal edgings, scuppers, and insulated pipes. Wood Nailer shall be secured per specifier recommendation or in accordance with Factory Mutual’s property Loss Prevention Data Sheet 1-49. Refer to **Design Reference DR-08-11 “Wood Nailers Securement Criteria”** in Versico Technical Manual shall be referenced.

G. When any of the Roofing Systems are specified on a portion of a roof, tie-ins to existing roofing membranes will be

required. Depending on the type of the existing roofing system, the tie-in method will vary. Total isolation between two roofing systems or weep holes may be required to address moisture migration from one roofing system to the other. Prior to the selection of any tie-in detail, ensure the selected detail will not restrict drainage.

H. On new construction projects, located in colder climates, special consideration should be given to construction practices and the possible migration of hot, humid air and moisture generated during construction. Refer to Paragraph 1.02 I and **Design Reference DR-01-21 "Construction Generated Moisture"**.

1.07 Product, Delivery, Storage and Handling

A. Deliver materials to the job site in the original, unopened containers.

B. When loading materials onto the roof, the Versico Authorized Roofing Contractor must comply with the requirements of the specifier/owner to prevent overloading and possible disturbance to the building structure.

C. Job site storage temperatures in excess of 90°F (32°C) may affect shelf life of curable materials (i.e., adhesives and sealants).

D. When the temperature is expected to fall below 40°F (4°C), outside storage boxes should be provided on the roof for temporary storage of liquid adhesives and sealants. Adhesive and sealant containers should be rotated to maintain their temperature above 40°F (4°C). Refer to Technical Data Bulletins for individual products for temperature restrictions.

E. Do not store adhesive or cleaner containers with opened lids due to the loss of solvent that will occur from flash-off.

F. Store Versico membrane on provided pallets in the original undisturbed plastic wrap in a cool, shaded area and cover with light-colored, breathable tarpaulins.

G. Insulation/underlayment must be stored so that it is kept dry and is protected from the elements. Store bundles flat and upright with the bottom of the bundles elevated (2" or more) above the finished surface.

H. Slit the insulation bundle packaging vertically down the center of the two short sides to prevent moisture accumulation within the package. Completely cover the bundle with a waterproof tarp and secure to prevent wind damage and/or displacement.

Part II – PRODUCTS

2.01 General

The components of this roofing system are to be products of Versico or accepted by Versico as compatible. The installation, performance or integrity of products by others, **when selected by the specifier and accepted by Versico**, is not the responsibility of Versico and is expressly disclaimed by the Versico warranty.

2.02 Membranes

A. VersiWeld Membranes

1. General

   a. VersiWeld TPO Membrane meets or exceeds the requirements of ASTM D6878-17, standard specification for Thermoplastic Polyolefin Based Sheet Roofing. In addition to the physical properties listed below, refer to the VersiWeld Membrane Technical Data Bulletin for Cool Roof Rating Council (CRRC) and LEED™ radiative properties as well as U.S.E.P.A. Toxic Leachate Testing and dynamic puncture resistance.

   b. When tested in accordance with ASTM C1549, the VersiWeld TPO membrane (white and tan) has an initial reflectance of 0.79 (white) and 0.71(tan) and a 3-year aged reflectance of 0.70 (white) and 0.64 (tan). The material has also been tested for emittance in accordance with ASTM C1371. An initial emittance of 0.90 (white) and 0.86 (tan)and a 3-year aged emittance of 0.86 (white) and 0.87 (tan) were achieved.

   c. The VersiWeld TPO membrane (white) meets the emittance requirements set forth by the USGBC (US Green Building Council) for their LEED (Leadership in Energy and Environmental Designs) Program. When tested in accordance with ASTM E408, an emittance of 0.90 was achieved and an SRI (solar reflectance index) of 99 was calculated using ASTM E1980.

2. VersiWeld 45- or 60-mil thick Reinforced Thermoplastic Polyolefin (TPO) membrane, VersiWeld QA TPO (Quick Applied) 60 or 80-mil thick Reinforced Thermoplastic Polyolefin (TPO) membrane and VersiWeld Plus 80-mil thick Reinforced Thermoplastic Polyolefin (TPO) conforms to the following physical properties. VersiWeld QAT TPO (white, tan or gray) membrane is available in 10’ wide by 50’ or 100’ long rolls and VersiWeld Standard / HS membrane available in field sheets in rolls 16’, 12', 10' or 8' wide by 100' long. Perimeter membrane sheets are available in widths of 6' (used with 12' and 10' wide field sheets) or 4' (used with 8' wide field sheets) by 100' long. VersiWeld Membrane is available in white, gray or tan. Special Color TPO membrane is available in 5 colors (Medium Bronze, Rock Brown, Terra Cotta, Slate Gray and Patina Green) in 60-mil field sheets in rolls 5’ or 10’ wide by 100’ long and 80-mil field sheets in 10’ wide by 100’ long. Special Color TPO is a special order product and may require a lead time.

   OPTION: 60- or 80-mil, white, VersiWeld TPO (white, tan or gray) reinforced membrane is available with an optional APEEL Protective Film. APEEL Protective Film can be left in place for up to 90 days without affecting the integrity of the film, guarding the TPO membrane’s surface from scuffs and dirt accumulation during installation. Durable and easy to remove, APEEL Protective Film improves aesthetics and long-term reflectivity. Available 4’, 6’, 8’, 10’ and 12’ widths by 100’ long rolls. Some sizes and colors of VersiWeld QA TPO with APEEL require a minimum order of 200 squares and 2-3 week lead time. Also available, APEEL 6” Cover Tape, allowing 100% coverage of the TPO surface. APEEL Cover Tape rolls are 1,640 feet long.

   NOTE: VersiWeld High Slope (HS)(also known as Extra Slope (ES)) and Special Color TPO Membrane is specially formulated with higher fire retardancy to accommodate steep slope roof conditions.

PHYSICAL PROPERTY	ASTM D6878 Requirement	45-mil Std & HS	60-mil Std & HS	60-mil QA TPO	80-mil Plus
Tolerance on nominal thickness, % ASTM D751 test method	+15, -10	± 10	± 10	± 10	± 10
Thickness over scrim, in. (mm) ASTM D6878 optical method, average of 3 areas	0.012 min. (0.305)	0.018 typical (0.457)	0.024 typical (0.610)	0.024 typical (0.610)	0.034 typical (0.864)
Breaking strength, lbf (kN) ASTM D751 grab method	220 (976 N) min.	225 (1.0) min. 320 (1.4) typ.	250 (1.1) min. 360 (1.6) typ.	250 (1.1) min. 360 (1.6) typ.	350 (1.6) min. 425 (1.9) typ.
Elongation break of reinforcement, % ASTM D751 grab method	15 min.	15 min. 25 typ.	15 min. 25 typ.	15 min. 25 typ.	15 min. 25 typ.
Tearing strength, lbf (N) ASTM D751 proc. B 8 by 8 in.	55 (245) min.	55 (245) min. 130 (578) typ.	55 (245) min. 130 (578) typ.	55 (245) min. 130 (578) typ.	55 (245) min. 130 (578) typ.
Brittleness point, °F (°C) ASTM D2137	-40 (-40) max.	-40 (-40) max. -50 (-46) typ.	-40 (-40) max. -50 (-46) typ.	-40 (-40) max. -50 (-46) typ.	-40 (-40) max. -50 (-46) typ.
Linear dimensional change, % ASTM D1204, 6 hours at 158 °F	± 1 max.	± 1 max. -0.2 typ.	± 1 max. -0.2 typ.	± 0.5 max. -0.2 typ.	± 1 max. -0.2 typ.
Ozone resistance, no cracks 7X ASTM D1149, 100 pphm, 168 hrs	Pass	Pass	Pass	Pass	Pass
Water absorption resistance, mass % ASTM D471 top surface only 166 hours at 158 °F water	± 3.0 max.	3.0 max. 2.0 typ.	3.0 max. 2.0 typ.	4.0 max. 2.0 typ.	3.0 max. 2.0 typ.
Factory seam strength, lbf /in. (kN/m) ASTM D751 grab method	66 (290) min.	66 (290) min.	66 (290) min.	66 (290) min.	66 (290) min.
Field seam strength, lbf /in. (kN/m) ASTM D1876 tested in peel	No requirement	25 (4.4) min. 50 (8.8) typ.	25 (4.4) min. 60 (10.5) typ.	25 (4.4) min. 60 (10.5) typ.	40 (7.0) min. 70 (12.3) typ.
Water vapor permeance, Perms ASTM E96 proc. B	No requirement	0.10 max. 0.05 typ.	0.10 max. 0.05 typ.	0.10 max. 0.05 typ.	0.10 max. 0.05 typ.
Puncture resistance, lbf (kN) FTM 101C, method 2031 (see supplemental section)	No requirement	250 (1.1) min. 325 (1.4) typ.	300 (1.3) min. 350 (1.6) typ.	300 (1.3) min. 350 (1.6) typ.	400 (1.8) min. 450 (2.0) typ.
Properties after heat aging ASTM D573, 670 hrs at 240 °F Breaking strength, % retained Elongation reinf., % retained Tearing strength, % retained Weight change, %	 90 min. 90 min. 60 min. ± 1.0 max.	 90 min. 90 min. 60 min. ± 1.0 max.	 90 min. 90 min. 60 min. ± 1.0 max.	 90 min. 90 min. 60 min. ± 1.0 max.	 90 min. 90 min. 60 min. ± 1.0 max.

2.03 Insulations/Underlayments

A. **General**

1. Roof insulation thickness must be determined by the thermal value required for each project and may be subject to code approval limitations. On projects where a vapor retarder is used, the specifier must calculate insulation thickness to ensure the temperature at the vapor retarder will not fall below the calculated dew point.

2. Multiple layers of insulation are recommended with all joints staggered between layers.

3. For minimum recommended R-Values, previously published by American Society of Heating and Air-Conditioning Engineers (ASHRAE), consult local building code official for applicable requirements.

4. For Insulation fastening pattern and densities refer to Versico Applicable Details and **Design Reference DR-05-23 "Insulation Fastening Patterns"**.

5. When new insulation or cover boards are specified, the use of Versico Insulation and Versico marketed cover board is required. Any of the Versico Insulation/Underlayment may be specified subject to design restrictions included with each of the following tables.

B. Versico Polyisocyanurate

Table B1 Polyisocyanurate (See below for product descriptions)

Insulations / Underlayment	Minimum Thickness	ASTM	Roofing System Acceptability	
			Fully Adhered	Mechanically Fastened
Versico VersiCore Polyiso	*1.5"	C1289, Type II, Class 1, Grade 2 or 3	√	√
Versico VersiCore NH Polyiso	*1.5"	C1289, Type II, Class 1, Grade 2 or 3	√	√
SecurShield Polyisocyanurate	*1.5"	C1289, Type II Class 2, Grade 2 or 3	√	√
SecurShield NH Polyisocyanurate	*1.5"	C1289, Type II Class 2, Grade 2 or 3	√	√
HD Polyiso Composite (SS HD)	2"	C1289, Type IV, Grade 2 or 3	√	√
DuraFaceR Polyiso Composite (OSB)	1.5"	C1289, Type V, Grade 2 or 3	√	√

Design Restrictions

-Extended Warranty, those with longer duration, higher wind speed, or puncture coverage, may require the use of a cover board over Polyiso Insulation, refer to Warranty Tables in Paragraph 1.04 for applicable requirements.

-Maximum Flute Spanability shall be limited to 2-5/8" when 1" Minimum Polyiso Insulation is to be used.
-Minimum thickness of insulation board may be restricted by wind speed coverage and warranty duration, refer to Tables V and VI in Paragraph 1.05.
*1.5 minimum for fully adhered systems. 1" minimum for mechanically attached systems or as a base layer for fully adhered.

Notes: N/A = Not Acceptable √ = Acceptable

NOTE: SecurShield HD is listed in Paragraph F below.

2. **Versico VersiCore Polyiso** – A foam core insulation board covered on both sides with a medium weight fiber-reinforced felt facer meeting ASTM C 1289, Type II, Class 1, Grade 2 (20 psi) or Grade 3 (25 psi). The product is available in 4' x 8' standard size with a thickness from 1 to 4 inches. 4' x 4' tapered panels are also available.

3. **SecurShield Polyisocyanurate–** A foam core insulation board covered on both sides with a coasted glass fiber mat facer meeting ASTM C 1289, Type II, Class 2, Grade 2 (20 psi) or Grade 3 (25 psi). The product is available in 4' x 8' standard size with a thickness from 1 to 4 inches. 4' x 4' tapered panels are also available. These flat board products feature a dark-colored coated-glass facer (CGF) on one side of the insulation board and a light-colored CGF on the other, labeled Ready Flash. Ready Flash Technology allows applicators to manage adhesive flash-off times by choosing between two different-colored facers on every board.

4. **SecurShield HD Composite** – Composite insulation panel comprised of 1/2-inch high-density (109 psi max) Polyiso cover board laminated during the manufacturing process to SecurShield rigid Polyiso roof insulation

meeting ASTM C1289 Type IV, Grade 2 (20 psi) or Grade 3 (25 psi). Available in 4’ x 8’ boards with thickness from 2” to 4.5”. 4’ x 4’ panels are also available.

5. **DuraFaceR Polyiso Composite (OSB)** –Polyiso insulation bonded on the bottom side with a medium weight fiber-reinforced felt face and laminated with a top surface of 7/16” or 5/8” thick Oriented Strand Board (OSB) meeting ASTM C1289, Type V, Grade 2 (20 psi) or Grade 3 (25 psi). Available in 4’ x 8’ boards with thickness from 1-1/2” to 4”.

C. **EPS : Expanded Polystyrene**

Table C1 EPS : Expanded Polystyrene (See below for product descriptions)

Insulations / Underlayment	Minimum Thickness	ASTM	Roofing System Acceptability	
			Adhered	Mechanically Fastened
InsulFoam I	1”	C578 Type I	N/A	√ (2)
InsulFoam VIII	.75”	C578 Type VIII	N/A	√
InsulFoam II	.75"	C578 Type II	N/A	√
InsulFoam IX	.75"	C578 Type IX	N/A	√
InsulFoam HD Composite (SecurShield HD)	1.5”	C578 Type (I, VIII, II, or IX)	√	√
InsulLam (Various Cover Boards)	1.5"	C578 Type (I, VIII, II. or IX)	√	N/A
InsulFoam SP	1"	C578 Type VIII	N/A	√
InsulFoam SP	2"	C578 Type VIII	(1)	√

Design Restrictions

-Local Codes must be consulted regarding the acceptance of expanded insulation directly over steel decks. When specified, minimum thickness shall be designated by the manufacturer.
-Expanded polystyrene roof insulations cannot be installed directly over coal-tar pitch roof surfaces or existing PVC membranes. A separation layer of minimum 1/2” SecurShield HD, Versico Recovery Board or Polyiso Insulation shall be used.
(1) May be used as a substrate for VersiWeld QA TPO membrane Only.
(2) Minimum 1.25 lbs/cubic ft (pcf) density required For VersiWeld TPO Membrane (White Membrane Only).

Notes: N/A = Not Acceptable √ = Acceptable

NOTE: R-Tech Fanfold Recover Board is listed in Paragraph F below.
NOTE: Insulation boards listed in a through d may be specified beneath SecurShield HD, Versico Recovery Board, DensDeck Prime, DensDeck StormX Prime or Securock.

2. **InsulFoam I –** A closed-cell lightweight expanded polystyrene (EPS) that meets ASTM C578, Type I. Nominal density of 1.0 lbs/cubic ft (pcf) available in 4’ x 4’ or 4’ x 8’ sizes with thickness from 1/4” to 40”. Custom lengths, widths and tapered boards are available.

3. **InsulFoam VIII –** A closed-cell lightweight expanded polystyrene (EPS) that meets ASTM C578, Type VIII. Nominal density of 1.25 lbs/cubic ft (pcf) available in 4’ x 4’ or 4’ x 8’ sizes with thickness from ¼” to 40”. Custom lengths, widths and tapered boards are available.

4. **InsulFoam II –** A closed-cell lightweight expanded polystyrene (EPS) that meets ASTM C578, Type II. Nominal density of 1.5 lbs/cubic ft (pcf) available in 4’ x 4’ or 4’ x 8’ sizes with thickness from 1/4” to 40”. Custom lengths, widths and tapered boards are available.

5. **InsulFoam IX –** A closed-cell lightweight expanded polystyrene (EPS) that meets ASTM C578, Type IX. Nominal density of 2.0 lbs/cubic ft (pcf) available in 4’ x 4’ or 4’ x 8’ sizes with thickness from 1/4” to 40”. Custom lengths, widths and tapered boards are available.

6. **InsulFoam HD Composite –** InsulFoam expanded polystyrene (EPS) insulation laminated with a top surface of 1/2” thick SecurShield HD. Available in 4’ x 8’ boards with thickness from 1-1/2” to 7”.

7. **InsulLam –** InsulFoam expanded polystyrene (EPS) insulation laminated with a top surface of 7/16” or 5/8” thick Oriented Strand Board (OSB),1/2” DensDeck Prime, 1/2” Securock, or 1/2" Versico Recovery Board. Available in 4’ x 8’ boards with thickness from 1-1/2” to 7”.

8. **InsulFoam SP –** A closed-cell lightweight expanded polystyrene (EPS) with a factory-laminated fiber glass facer. Nominal density of 1.25 lbs/cubic ft (pcf), available in 4’ x 8’ size, and meets ASTM C578, Type VIII. Designed for low-sloped roof applications that employ mechanically attached or VersiWeld QA TPO membranes.

D. **XPS: Extruded Polystyrene –** Available through Versico is dimensionally stable with high thermal and low water absorption performance capability. XPS is available in varying compressive strengths thicknesses and sizes. Refer to specific Technical Data Bulletins for physical properties and additional technical information.

Table D1	**XPS: Extruded Polystyrene** (See below for product descriptions)			
Insulations / Underlayment	**Minimum Thickness**	**ASTM**	**Roofing System Acceptability**	
			Fully Adhered	**Mechanically Attached**
Thermapink 18	.75"	Refer to Technical Data Bulletin	N/A	√
Thermapink 25	1"	Refer to Technical Data Bulletin	N/A	√
Foamular 400	1"	Refer to Technical Data Bulletin	N/A	√
Dow Styrofoam Deckmate Plus	1"	Refer to Technical Data Bulletin	N/A	√
Design Restrictions				
-Local Codes must be consulted regarding the acceptance of expanded insulation directly over steel decks. When specified, minimum thickness shall be designated by the manufacturer. -Extruded polystyrene roof insulations cannot be installed directly over coal-tar pitch roof surfaces or existing PVC membranes. A separation layer of minimum 1/2" SecurShield HD, Versico Recovery Board or Polyiso Insulation shall be used. -Refer to related products listed in **Spec Supplement P-01-22 "Related Products"** for other products which may be suitable for use. Versico must be contacted for specific requirements.				
Notes: N/A = Not Acceptable √ = Acceptable				

2. Thermapink 18 or 25 Extruded Polystyrene
3. Foamular 400 Extruded Polystyrene
4. Dow Styrofoam Deckmate Plus Extruded Polystyrene

E. **Versico Vacuum Insulated Panel (VIP)**

Table E1	**Vacuum Insulated Panel (VIP)** (See below for product descriptions)			
Insulations / Underlayment	**Minimum Thickness**	**ASTM**	**Roofing System Acceptability**	
			Adhered	**Mechanically Fastened**
Versico Optim-R VIP	*1.6"	C1484	√	N/A
Design Restrictions				
*2.6" minimum for total installed system including an additional 2 layers of 1/2" SecurShield HD panels; 1 layer on top and 1 layer on bottom of Optim-R. For adhered systems only. Note: Optim-R VIP cannot be cut or punctured.				
Notes: N/A = Not Acceptable √ = Acceptable				

1. **Optim-R Vacuum Insulated Panel (VIP) –** a high R-Value vacuum insulated panel (VIP) used to provide a low-profile solution when height restrictions exist, such as windows, doors, equipment curbs, etc. Provides an R-38 insulating value in a 2.6" system thickness with up to 35% infill (non-VIP material). Available in 23.6" x 23.6" and 23.6" x 47.2" board sizes.

F. **Cover Boards / Slip Sheets**

Table F1	**Cover Boards / Slip Sheets** (see below for product descriptions)			
Insulations / Underlayment	**Minimum Thickness**	**ASTM**	**Roofing System Acceptability**	
			Fully Adhered	**Mechanically Attached**
SecurShield HD	.5"	C1289, Type II, Class 4 (109 psi max)	√	√
SecurShield HD Plus	.5”	C1289, Type II, Class 4 (109 psi max)	√	√
VersiCore HD	.5”	C1289, Type II, Class 1, Grade 3	N/A	√
DuraStorm VSH	.5"	Refer to Technical Data Bulletin	√	√
Securock Cover Board	.25"	Refer to Technical Data Bulletin	√	√
DensDeck StormX Prime	.625”	C1177	√	√ (1)
DensDeck Prime	.25"	C1177	√	√ (1)
DensDeck	.25"	C1177	N/A	√ (1)
R-Tech Fanfold Recovery Board	.5"	C578 Type (I, VIII, II. or IX)	N/A	√
HP Protection Mat	6 oz	Refer to Technical Data Bulletin	N/A	√
Design Restrictions				
-Versico Recovery Board and R-Tech Fanfold not recommended for direct use over Type B and F steel decks. -Securock Cover Board, Versico Recovery Board, DensDeck Prime, DensDeck StormX Prime or DensDeck may not be used directly over New or Existing Lightweight Insulating Concrete Decks existing or Structural Concrete. -Due to some warranty restrictions, DensDeck, DensDeck StormX Prime and DensDeck Prime not recommended for use directly over existing roofing membrane without prior written approval from Versico. Contact Versico for specific requirements. -R-Tech Fanfold primarily for use in existing roof re-covers applications or directly over structural or lightweight insulating concrete. (1) Permitted for use on combustible decks with slopes greater than 2” per foot for compliance with external fire codes, refer to UL listings or contact Versico. Notes: N/A = Not Acceptable √ = Acceptable				

2. **SecurShield HD –** a rigid insulation panel composed of a high-density (109 psi max), closed-cell polyisocyanurate foam core laminated to coated-glass fiber-mat facer for use as a cover board or recover board. Available 1/2” thick 4’ x 8’ panel weight 11 lbs with an R-value of 2.5. These flat board products feature a dark-colored coated-glass facer (CGF) on one side of the insulation board and a light-colored CGF on the other, labeled Ready Flash. Ready Flash Technology allows applicators to manage adhesive flash-off times by choosing between two different-colored facers on every board.

3. **SecurShield HD Plus** - a rigid insulation panel composed of a high-density (109 psi max), closed-cell polyisocyanurate foam core laminated to premium-performance coated-glass fiber-mat facer for use as a cover board or recover board. Available 1/2” thick 4’ x 8’ panel weight 11 lbs with an R-value of 2.5. Meets an FM 1-90 using only 8 fasteners per 4’ x 8’ board.

4. **VersiCore HD –** a closed-cell polyisocyanurate foam core insulation board covered on both sides with glass-reinforced felt (GRF) facer meeting ASTM C 1289, Type II, Class 1, Grade 3. The product is available in 4’ x 4’ and 4’ x 8’ standard sizes with a thickness of one half inch.

5. **Securock Cover Board –** A uniform composition of fiber-reinforced gypsum without a facer, for use as a cover board or a thermal barrier. Available in 1/4” to 5/8” thick and 4’ x 4’ or 4’ x 8’ size boards. Long uninterrupted runs (>200’) may require slight gapping due to thermal expansion.

6. **DuraStorm VSH Cover Board** - an engineered composite building material made from a proprietary blend of plastic and cellulose fiber sourced from post-industrial and post-consumer waste streams. DuraStorm VSH is a durable, extremely moisture and mold resistant building material with a core that does not disintegrate or delaminate in the presence of water. Available in 1/2” thick and 4’ x 8’ size board.

7. **Versico Recovery Board** - A 1/2” or 1” thick high-density wood fiberboard with an asphalt coated facer for use as a cover board or recover board. Available 1/2” or 1” thick and 4’ x 4’ or 4’ x 8’ size boards.

8. **DensDeck StormX Prime** – a reinforced gypsum cover board with an enhanced, moisture-resistant core and coated glass mat facers on the top and bottom side. The top surface is pre-primed and provides excellent bond strength for adhered membrane for use as a cover board. DensDeck StormX Prime is extremely durable and is approved for use in assemblies meeting FM’s Very Severe Hail (VSH) Classification. Available in 5/8” thickness and 4’ x 4’ or 4’ x 8’ size boards.

5. **DensDeck Prime** –gypsum core that incorporates glass-mat facings on the top and bottom side. The top surface is pre-primed and provides excellent bond strength for fully adhered membrane for use as a cover board. Available in 1/4” to 5/8” and 4’ x 4’ or 4’ x 8’ size boards.

6. **DensDeck Cover Board** –gypsum core that incorporates glass-mat facings on the top and bottom side for use as a cover board. Available in 1/4” to 5/8” and 4’ x 4’ or 4’ x 8’ size boards.

7. **R-Tech FanFold Recover Board –** Closed-cell lightweight expanded polystyrene (EPS) with polymeric laminated faces which meets ASTM C 578 for use as a recover board. Polymeric facer compatible with PVC and KEE HP membrane, while metallic side used with EPDM. Available in thicknesses of 3/8” to 3/4” with coverage 4’ x 50’ (2 squares). 4’ x 8’ units are also available.

8. **HP Protection Mat –** A nominal 6-oz per square yard UV resistant polypropylene needle punched fabric used either above the membrane as a slip-sheet for ballast or as an underlayment to the membrane. Available 15’ x 300’ roll (4500 square foot) weighing 0.06 lbs per square foot.

2.04 Related Materials

A. **VersiWeld Flashing (for use with VersiWeld Adhered, Mechanically Attached and VersiWeld QA Fully Adhered Membrane Assemblies)**

1. **VersiWeld Flashing:** VersiWeld **non-reinforced flashing** is available in rolls **12" and 24" wide by 50' long**. Flashing is used for inside/outside corners and field fabricated pipe flashings when the use of pre-molded or pre-fabricated accessories is not feasible. In addition, **45-mil by 6" wide by 100' long, 60-mil by 6” wide by 100’ long, 9” wide by 50’ long and 80-mil by 9” wide by 50’ long.** VersiWeld **reinforced membrane** is available for overlaying fasteners and fastening plates.

2. **VersiWeld Pressure-Sensitive Cover Strip:** A nominal 40-mil thick non-reinforced TPO membrane laminated to nominal 35-mil thick cured synthetic rubber pressure-sensitive adhesive used in conjunction with TPO Primer or Low-VOC TPO Primer to strip in flat metal flanges (i.e., drip edges). Available in rolls 6" wide by 100' long in colors of white, gray or tan. Not for use on 25-year or 30-year Warranty projects.

3. **VersiWeld TPO Reinforced Overlayment Strip:** A heat-weldable, reinforced thermoplastic polyolefin membrane. It is available in 45-mil 6" x 100' and 60-mil 6" x 100' and 9" x 50' rolls in colors of white, gray or tan. It can be used to cover end laps on VersiFleece and QA TPO systems and to strip in flat metal flanges on details such as TPO coated drip edges, gravel stops, and scuppers.

4. **APEEL Cover Tape:** A 6"-wide, 1,640' long roll of APEEL Protective Film used to protect areas of VersiWeld TPO or VersiFlex PVC/KEE HP membrane where APEEL Protective Film has been removed (around details) or was not factory applied (seams). APEEL Cover Tape allows contractors to keep 100 percent of the TPO or PVC/KEE HP surface clean during installation and is applied using the APEEL Cover Tape Applicator.

5. **VersiWeld TPO Pressure-Sensitive RUSS:** A nominal 6" and 10" wide, 45-mil thick reinforced TPO membrane with nominal 3" wide 35-mil thick cured synthetic rubber pressure-sensitive adhesive laminated along one end on 6" wide RUSS and along both ends on 10" wide RUSS. Used in conjunction with TPO Primer or Low-VOC TPO Primer. 6" wide RUSS is used as a base membrane securement along walls, curbs, etc.; 10" wide RUSS is used to form perimeter sheets on Mechanically Attached Systems.

6. **VersiWeld TPO T-Joint Covers:** A 60-mil thick injection molded TPO flashing formed into a 4.5" diameter circle used to seal step-offs at splice intersections. Installation is mandatory on all 60-, 72-, and 80-mil TPO systems and on 45-mil systems where step-offs have not been properly sealed. Packaged in boxes of 100. Available in white, tan or gray.

7. **Yellow Pressure-Sensitive (PS) Warning Strip:** A nominal 30-mil-thick non-reinforced TPO flashing laminated to a nominal 30-mil-thick, fully cured synthetic rubber Pressure-Sensitive adhesive and is available in 6" wide by 100' long rolls. Yellow Pressure-Sensitive Warning Strip can be applied to EPDM, TPO or Hypalon roofing systems to provide a visual warning of an impending hazard (i.e. roof edge, deep drain sump, skylight).

8. **VersiWeld TPO Rib Profile:** Used to obtain the appearance of standing seam metal roofing with the performance of a TPO single-ply membrane. The Rib Profile measures 1-1/4” tall and 1-3/4” wide, including the welding flanges, while the vertical profile is a substantial 3/8” thick. The profile has a continuous 1/8” diameter alignment hole, for use with fiberglass connecting pins, as well as a 1/8” fiberglass reinforcing cord for added strength. The Rib Profile is available in white, gray and tan, as well as Special Colors (Medium Bronze, Rock Brown, terra Cotta, Slate Gray and Patina Green) in 10’ lengths and packaged 20 per carton.

9. **Pre-Molded Accessories:**

a) **Inside Corners**: A pre-molded corner flashing for inside corners. Available in white, gray or tan; 60-mil thick.

b) **Outside Corners**: A one-piece injection molded corner flashing used for flashing outside corners. Available in white, gray or tan; 60-mil thick.

c) **TPO Curb Wrap Corners**: Fabricated flashings are made of 60-mil thick reinforced VersiWeld membrane designed to reduce installation time to flash a curb when compared to conventional methods. Each corner is fabricated with a 6" wide base flange and a 12" overall height. Four sizes are available to fit curbs up to 6' by 6' in size. One curb requires 4 corners for a complete installation. TPO Curb Corners are packaged in boxes containing twelve corners. Custom sizes are available as a special order product requiring lead time.

d) **TPO Universal Corners:** a pre-molded flashing for use in a variety of corner details, including inside and outside corners. Available in white, gray and tan and are 60-mil thick.

e) **Pipe Flashings**: A pre-molded white, gray or tan pipe flashing used for pipe penetrations. Available for 3/4" –8" diameter pipes with clamping rings included.

f) **Split Pipe Seals:** A prefabricated flashing consisting of 60-mil thick reinforced VersiWeld Detail Membrane for pipes 1" – 6" in diameter. A split (cut) and overlapped tab are incorporated to allow the pipe seal to be opened and wrapped around the pipe when it is not possible to pull a standard pipe flashing over a round penetration. Custom sizes are available as a special order product requiring lead time.

g) **TPO Square Tubing Wraps**: Fabricated flashings made of 60-mil thick reinforced VersiWeld Detail membrane for square tubing. A split (cut) and overlap tab are incorporated into these parts to allow the seals to be opened and wrapped around a square penetration. Available for 3", 4", 5" and 6" square tubing

h) **Molded TPO Sealant Pockets**: A pre-fabricated, interlocking, 2-piece, injection molded, flexible pocket with a rigid polypropylene vertical wall and pre-formed deck flanges. Pockets can be adjusted from 11.5" to 7.5" in length by 6" in width by following the cutting lines molded into the pocket. Used in conjunction with White One-Part Pourable Sealer for waterproofing pipe clusters or other odd shaped penetrations. Available in white, gray or tan.

i) **Pre-fabricated Sealant Pockets**: A two-piece, pre-fabricated sealant pocket that utilizes reinforced 60-mil TPO membrane and coated metal to form a rigid, oversized sealant pocket with a weldable horizontal deck flange. Available in 12" (total volume of 1.87 gallons). Packaged 2 per carton and available in white only. Refer to the applicable Technical Data Bulletin for dimensions and installation instructions. Custom sizes are available as special order products.

j) **Sealant Pocket Extension Legs**: Designed for use with the TPO Molded Sealant Pocket and the Pre-Fabricated Sealant Pocket to extend the length in increments of 10". Fabricated from 45-mil thick reinforced TPO membrane and TPO coated metal. Can be used full length, cut to size for customized lengths or welded to each other for extra-long applications. Packaged 10 legs per carton and available in white only.

B. **Primers, Adhesives, Sealants and Cleaners**

Refer to Technical Data Bulletins for material coverage rates and proper usage. Prior to the use of any of the products listed below, consult the Safety Data Sheets for applicable cautions and warnings.

1. **VersiWeld Products**

a) **VersiWeld Bonding Adhesive:** A high-strength, synthetic rubber adhesive used for bonding VersiWeld membrane to various surfaces. The adhesive is applied to both the membrane and the substrate at a coverage rate of approximately 60 square feet per gallon per finished surface (includes coverage on both surfaces).

b) **Low-VOC Bonding Adhesive for TPO:** This product meets the <250 gpl VOC (volatile organic compound) content requirements of the OTC Model Rule for Single-Ply Roofing Adhesives. A high strength, solvent-based contact adhesive that allows bonding of TPO membrane to various porous and non-porous substrates. Apply at a rate of 60 ft2 per gallon finished surface. Available in 5 gallon pails. **This product does not comply with certain counties in the State of California which have additional restrictions on solvents.**

c) **Low-VOC Bonding Adhesive 1168:** This product meets the <250 gpl VOC (volatile organic compound) content requirements of the OTC Model Rule for Single Ply Roofing Adhesives. A high strength, solvent-based contact adhesive that allows bonding of TPO membrane to various porous and non-porous substrates. Apply at a rate of 60 ft2 per gallon finished surface. Available in 5-gallon cans. **This product**

complies with all counties in the State of California which have additional restrictions on solvents.

d) **Aqua Base 120 Bonding Adhesive:** A semi pressure-sensitive, water based adhesive used as a two-sided contact adhesive. Coverage rate is 120 square feet per gallon finished surface (applied to membrane and substrate). Refer to **Spec Supplement G-09-21 "Aqua Base 120 Bonding Adhesive"** for Warranty limitations and other considerations.

e) **CAV-GRIP 3V Low-VOC Aerosol Contact Adhesive/Primer:** a low-VOC, spray-applied aerosol contact adhesive and primer used for a variety of applications: adhering standard VersiWeld TPO and VersiGard EPDM membranes to horizontal and vertical surfaces, adhering VersiFleece membranes to vertical surfaces, as a primer for VapAir Seal 725TR, and as an unexposed asphalt primer for Flexible DASH for insulation attachment.

f) **Cut-Edge Sealant:** A clear colored sealant used to seal cut edges of reinforced VersiWeld membrane. A coverage rate of approximately 225 - 275 linear feet per squeeze bottle can be achieved when a 1/8" diameter bead is applied.

g) **Water Cut-Off Mastic:** Used as a mastic to prevent moisture migration at drains, compression terminations and beneath conventional metal edging (at a coverage rate of approximately 10' per tube or 100' per gallon).

h) **Universal Single-Ply Sealant:** A 100% solids, solvent free, VOC-free, one part polyether sealant that provides a weather tight seal to a variety of building materials. It is white in color and is used for general caulking such as above termination bars and metal counter flashings and at scuppers.

i) **White One-Part Pourable Sealer**: A one-part, moisture curing, elastomeric polyether sealant used to fill Molded Pourable Sealant Pockets. Packaged in 4, 2-liter foil pouches inside a reusable plastic bucket. 1 pouch will fill 122 cubic inches of volume within a sealant pocket.

j) **Weathered Membrane Cleaner:** Used to prepare TPO membrane for heat welding that has been exposed to the elements or to remove general construction dirt at an approximate coverage rate of 400 square feet per gallon (one surface).

k) **TPO Primer:** A solvent-based primer used to prepare the surface of VersiWeld Membrane prior to application of Pressure-Sensitive Coverstrip and TPO Pressure-Sensitive RUSS.

l) **TPO Low-VOC Primer:** A solvent-based, low solids primer used to prepare the surface of VersiWeld Membrane prior to application of Pressure-Sensitive Coverstrip and TPO Pressure-Sensitive RUSS. This Low-VOC product is ideal for use in states where environmental issues are a concern.

2.05 Fastening Components

A. Securement Strips (RUSS)

1. **VersiWeld Pressure-Sensitive RUSS (Reinforced Securement Strip)**: A 6" or 10" wide, nominal 45-mil thick reinforced TPO membrane STRIP with a nominal 35-mil thick cured TPO splice tape adhesive laminated along one or both edges. (3" wide Quick Applied QA Seam Tape laminated along one edge for the 6" wide RUSS and along both edges for the 10" wide RUSS.)

   a) 6" wide Pressure-Sensitive RUSS is used horizontally or vertically at the base of walls, curbs, etc., in conjunction with Seam Fastening Plates below the VersiWeld TPO deck membrane for additional membrane securement. Available in rolls 100' long, 2 per carton.

   b) 10" wide Quick-Applied RUSS is utilized for perimeter membrane securement along the center of field sheets to form perimeter membranes. Available in rolls 100' long, 1 per carton.

B. Fasteners

The following Table illustrates criteria for fastening of Versico Insulation with the referenced roof deck and includes minimum penetration requirements and pilot hole criteria.

Insulation Fastening Criteria

Deck Type	Versico Fasteners (1)	Min. Penetration	Pilot Hole Depth	Pilot Hole Diameter
Steel or Lightweight Insulating Concrete over Steel	ASAP or InsulTite	3/4"	N/A	N/A
Structural Concrete, rated 3,000 psi or greater	CD-10	1"	Note (2)	7/32"
	MP 14-10	1"	Note (2)	3/16"
Wood Plank, min. 15/32" thick Plywood or min. 7/16" OSB	HPV, ASAP or InsulTite	Min. 1" (3)	N/A	N/A
Cementitious Wood Fiber	Polymer Gyptec	1-1/2"	Note (4)	N/A
Gypsum	Polymer Gyptec	1-1/2"	Note (2)	7/16", 1/2" or 9/16" (5)

Notes: N/A = Not Applicable

(1) For Fully Adhered Systems, only 3" diameter insulation fastening plates can be used for insulation attachment.
(2) The pilot hole must be predrilled to a sufficient depth to prevent contact between the fastener point and any accumulated dust in the predrilled hole. This will help prevent bottoming out of the fastener during installation.

(3) For wood planks only, fastener penetration shall not exceed 1-1/2".
(4) Most cementitious wood fiber decks do not require pre-drilling; however, Versico should be contacted prior to installation for verification of specific types that may require a pilot hole to be predrilled.

(5) Pilot hole size may be varied to maximize pullout resistance.

All Fasteners listed below can be used with VersiWeld or VersiFlex Roofing Systems. Refer to the applicable specification for specific requirements.

1. **HPVX Fastener:** A heavy duty #15 threaded fastener with a #3 Phillips drive used with Versico's HPVX Fastening Plate to secure Mechanically Attached Roofing Systems. It is used on minimum 22 gauge steel decks or minimum 15/32" CDX plywood decks. It is also designed to offer an optimum combination of driving performance, back-out and corrosion resistance with excellent pullout performance.

2. **HPV-XL Fastener:** An oversized diameter #22(.315") steel, threaded fastener used in conjunction with HPV-XL Plates for membrane securement into minimum 22 gauge steel or wood decks on Mechanically Attached Roofing Systems.

3. **HPV Fastener:** A threaded E-coat square head fastener **for insulation attachment only**. Used into steel, wood plank, minimum 15/32" thick plywood or minimum 7/16" thick oriented strand board (OSB).

4. **Pre-Assembled InsulTite ASAP Fastener**: Versico's InsulTite Fastener pre-assembled with a 3" diameter plastic plate used for **insulation attachment only** on Fully Adhered and Mechanically Attached Roofing Systems. Installed using Olympic Fasteners' Fastening Tool.

5. **InsulTite Fastener**: A threaded Phillips drive fastener used with Versico Insulation Plates for **insulation attachment** to steel or wood decks.

6. **CD-10 Fastener:** A hammer-driven, non-threaded E-Coat fastener for use with structural concrete decks rated 3,000 psi or greater.

7. **MP 14-10 Concrete Fastener:** A #14 threaded fastener with a #3 Phillips drive used for minimum 3,000 psi concrete decks.

8. **Polymer Gyptec Fastener:** A glass-filled nylon auger fastener designed for securing insulation and/or membrane to specialty decks such as cement wood fiber or gypsum.

C. **Fastening Plates**

1. **HPVX Plate**: A 2-3/8" diameter metal barbed fastening plate used with Versico HPVX CD-10 or MP 14-10 Fasteners for membrane or insulation securement. This plate can be used for membrane or insulation securement on Mechanically Attached Roofing Systems.

2. **HPV-XL Plate**: A 2-3/8" diameter metal barbed fastening plate with an oversized hole for use with Versico HPV-XL Fasteners for membrane securement on Mechanically Attached Roofing Systems.

3. **Seam Fastening Plate**: A 2" diameter metal plate used for insulation attachment on Mechanically Attached Systems or membrane securement at angle changes on Fully Adhered Systems in conjunction with the appropriate Versico Fastener.

4. **Insulation Fastening Plate**: A nominal 3-inch metal plate used for insulation attachment in conjunction with the appropriate Versico Fastener.

5. **SecurFast Insulation Fastening Plates:** A nominal 2-7/8" hexagon metal plate used for insulation attachment in conjunction with the appropriate Versico Fastener.

6. **Accutrac Insulation Plates:** A nominal 3" square, recessed or flat bottomed, metal plate used for insulation attachment in conjunction with the appropriate Versico Fastener. Flat bottom plate is used with manufactured Philips Head fasteners only.

2.06 Insulation Securement Adhesive

1. **Flexible DASH Adhesive:** A two-component (Part A and B), low-rise polyurethane adhesive designed for bonding VersiFleece membrane and/or insulation to various substrates. Coverage rates can be found in Paragraph 3.05 'Membrane Placement and Securement'. Flexible DASH Adhesive is packaged in 50- and 15-gallon drums, as well as, 5-gallon Jug and Dual Cartridges that can be applied in full spray or extrusion, depending on dispensing type.

2. **Flexible DASH Dual Tank:** A two component (Part A and B), extrusion applied, low rise adhesive for bonding insulation to various surfaces. DASH Dual Tanks utilize an HFO blowing agent. HFO (hydrofluoroolefin) blowing agents are widely recognized as the next-generation environmentally friendly blowing agent, replacing their HFC (hydrofluorocarbon) predecessor. When extruded at 12" on center the coverage rate is 3,500 to 3,700 sq.ft. per set of Dual Tanks.

3. **Flexible DASH Dual Cartridge and 5-gallon Jug Adhesive:** A two component (Part A and B), extrusion applied, low rise adhesive for bonding insulation to various surfaces. When extruded at 12" on center the coverage rate is 400-600 sq.ft. per carton of Dual Cartridges or 2,000-2,500 sq.ft. per set of 5-gallon Jug Adhesive.

4. **OlyBond 500 Bag in a Box** – A two-component, polyurethane, low-rise expanding adhesive used to bond insulation to various substrates. Packaged in 5-gallon boxes of Part A and Part B formulations that are applied using a mechanical dispenser system. Applied in 1/2" to 3/4" beads or ribbons at the rate of 1 gallon per 150-250 square feet for 12" o.c. bead spacing. Perimeter bead spacing patterns and acceptable insulation and deck types are listed in the applicable Product Data Sheet.

5. **OlyBond 500 BA Spot Shot** - A two-component, polyurethane construction grade, low-rising expanding adhesive designed for bonding insulation to various substrates. Applied in 1/2" to 3/4" beads or ribbons using a portable 1:1 applicator (oversized, dual-cartridge caulking gun). Refer to the Product Data Sheet for bead spacing with reference to building height.

2.07 Vapor / Air Barrier

1. **General**

   If insulation is to be fully adhered to the vapor retarder with Flexible DASH Adhesive, the vapor retarder must be compatible and shall be fully adhered to the substrate. Available products include Versico 725 Air and Vapor Barrier and spray or roller applied butyl coatings. Installation requirements for Versico's VapAir Seal 725TR Air and Vapor Barrier are identified in **Spec Supplement G-07-20 "Application Procedures for 725TR Air and Vapor Barrier"** and Versico's VapAir Seal MD Air and Vapor Barrier are identified in **Spec Supplement G-12-19 "Application Procedures for VapAir Seal MD air and Vapor Barrier**" in the Versico Technical Manual.

2. **Versico VapAir Seal 725TR Air and Vapor Barrier** - A 40-mil thick composite consisting of 35-mil self-adhering rubberized asphalt membrane laminated to an 5-mil UV resistant poly film with an anti-skid surface which is fully compatible with Flexible DASH Adhesive. 725TR can also function as a temporary roof for up to 120 days. Available in rolls 39" wide by 100' long (325 square feet).

3. **Versico VapAir Seal MD Air and Vapor Barrier** – a reinforced composite aluminum foil with self-adhesive SBS backing and removable poly release film. Used for direct application over metal decks. Used for direct application over metal decks. Available in rolls 42.5" wide by 131.23" long (460 square feet).

4. **CAV-GRIP 3V Low-VOC Aerosol Contact Adhesive/Primer:** a low-VOC, methylene chloride-free adhesive that can be used for a variety of applications including: enhancing the bond between Versico's VapAir Seal 725TR and various substrates. Coverage rate is approximately 2,000-2,500 sq. ft. per 40 lb cylinder and 4,000-5,000 sq. ft. per 85 lb cylinder as a primer, in a single-sided application.

5. **CCW-702 Primer and 702LV Primer (Low-VOC)** - A single component, solvent based, high-tack primer used to provide maximum adhesion between Versico 725TR Air and Vapor Barrier and an approved substrate. Applied by spray or long nap roller with a coverage rating ranging from approximately 300 to 350 square feet per gallon on smooth finishes (i.e., concrete) to 75 square feet per gallon on porous surfaces (i.e., DensDeck Prime gypsum board). Available in 5-gallon containers. CCW-702LV Primer contains less than 250g/L VOCs and meets South Coast Air Quality Management District (SCAQMD) and Leadership in Energy and Environmental Design (LEED) Requirements for Volatile Organic Compounds.

6. **CCW-702WB –** a high-tack, water-based contact adhesive for promoting adhesion of Versico air/vapor barrier membranes and an approved substrate (i.e., concrete, DensDeck Prime and Securock). Applied by roller, brush or spray with an application rate of approximately 200 sq. ft. per gallon. Available in 5-gallon containers. CCW-702WB Primer contains 57g/L VOCs and meets South Coast Air Quality Management District (SCAQMD) and Leadership in Energy and Environmental Design (LEED) Requirements for Volatile Organic Compounds.

2.08 Metal Accessories, Edgings, Coping and Terminations

A. General

Products listed below can be used with any of the available Versico Roofing Systems. Refer to the applicable Versico details and installation instruction manuals for specific installation criteria.

B. Products

1. **VersiWeld TPO Coated Metal:** A 24 gauge, galvanized steel sheet coated with a layer of 40-mil non-reinforced VersiWeld Flashing. The sheet is cut to the appropriate width and used to fabricate metal drip edges or other roof perimeter edging profiles. VersiWeld Membrane may be heat welded directly to the coated metal. Coated metal is available in sheets 4' x 10' and comes packaged 25 sheets per pallet (also available packaged 10 sheets per pallet on a direct ship basis). Available in white, gray or tan. Also available in TPO Special Colors (Medium Bronze, Rock Brown, Terra Cotta, Slate Gray and Patina Green) and comes packaged 5 sheets per pallet on a direct ship basis.

2. **VersiTrim 200/300 Drip Edge:** Pre-fabricated TPO or PVC-coated metal edging. Heat-weld membrane directly to edge. Available in sizes up to 8” fascia height and in colors: white, gray or tan.

4. **VersiTrim 200 Fascia**: A snap-on edge system consisting of a 24 gauge galvanized metal water dam and 40, 50 or 63-mil thick aluminum Kynar 500, clear and colored anodized finish or 22 or 24 gauge steel, Kynar 500 finish. The fascia is available in a variety of colors and heights varying from 5" to 12-1/2". Custom fascias and colors are available upon request. ANSI/SPRI ES-1 certified.

5. **VersiTrim 2000 Standard Fascia:** An anchor bar roof edge fascia system consisting of heavy .100" thick extruded aluminum bar, corrosion resistant stainless steel fasteners and snap-on fascia cover used with Fully Adhered, Mechanically Attached assemblies. Refer to installation instructions for various sizes, colors and accessories ANSI/SPRI ES-1 certified. Also available in **VersiTrim 2000 Extended Fascia** (Up to 13” Face Height) and **VersiTrim 2000 Canted Fascia**.

6. **VersiTrim 3000 Roof Edge System**: A metal anchor bar fascia system consisting of a 20 gauge steel retainer bar, corrosion resistant fasteners and a 32, 40, 50 or 63-mil thick aluminum or 24 gauge steel snap-on fascia cover. It is for use in Fully Adhered and Mechanically Attached Roofing Systems. ANSI/SPRI ES-1 certified. Also available in **VersiTrim 3000XT Roof Edge System** (Up to 13” Face Height).

7. **Termination Bar:** A 1" wide and 98-mil thick extruded aluminum bar pre-punched 6" on center which incorporates a sealant ledge to support Lap Sealant and provide increased stability for membrane terminations.

8. **VersiTrim Term Bar Fascia:** A 1.75” wide formed aluminum termination bar with pre-slotted fastening holes for ease of locating and installing. The decorative cover is available in 0.040” aluminum or 24-gauge galvanized steel. VersiTrim Term Bar Fascia is manufactured in 12’ lengths for fewer joints/seams, fewer sections to handle and faster installation.

9. Refer to **Spec Supplement P-01-22 “Related Products”** for other edgings and coping materials.

2.09 Roof Walkways

Walkways are to be specified at all traffic concentration points (i.e., roof hatches, access doors, rooftop ladders, etc.), and if regular maintenance, once a month or more, is necessary to service rooftop equipment.

1. Walkway Types

a) **VersiWeld Heat Weldable Walkway Rolls:** Designed to protect VersiWeld membrane in those areas exposed to repetitive foot traffic or other hazards. Walkway material may be heat welded to VersiWeld membrane using an automated heat welder or hand held heat welder. The diamond plate tread pattern offers superior slip resistance. The walk edges are trimmed in safety yellow to better define the designated traffic flow. Walkway Rolls are 34” wide by 50' long and are nominal 180 mils thick. Available in white, tan or gray with safety yellow welding tabs along both edges.

NOTE: As an option, walkway rolls may be fully adhered to the membrane surface with QA Seam Tape/TPO Primer.

c) **VersiWeld TPO Crossgrip Walkway Rolls:** Manufactured from TPO and may be used in lieu of standard VersiWeld TPO Walkway Rolls when a walkway is to be loose-laid and not secured to the membrane. Loose-laid Crossgrip TPO Walkway Rolls are effective for winds up to 55 mph. Rolls are 36” wide by 33’ long, available in white, gray and yellow.

d) **Versico Interlocking Rubber Pavers:** 24" X 24" X 2" thick rubber paver weighing approximately 24 pounds per unit, 6 pounds per square foot manufactured from recycled rubber, which provides a resilient, shock absorbing, weather resistant surface. Designed primarily for use as a walkway or on terrace areas offering a unique, environmentally sound advantage over concrete pavers. Features include freeze/thaw stability, bi-directional drainage and no breakage concerns. Available in black and terra cotta.

e) **Hanover Ballast and Lightweight Ballast Pavers:** The standard, 24” x 24” x 1-13/16” thick, Ballast Paver comes in a natural color and a non-slip Diamond finish and weighs 22 lbs/sq. ft. The Lightweight, 23-1/2” x 23-1/2” x 1-1/4” thick, Ballast Paver comes in a natural color and a non-slip diamond finish and weighs 15 lbs/sq. ft. Both pavers can be used as ballast or walkways.

2.10 Other Versico Accessories

Refer to **Spec Supplement P-01-22 “Related Products”** for additional accessories.

Part III – Execution

Prior to commencing with the installation of any of the Thermoplastic Membrane Systems refer to Paragraph 1.05 "Warranty Tables" for applicable components and proper securement method suitable for the appropriate warranty coverage.

Requirements listed in this specification are considered minimum and are intended for the sole purpose of obtaining a Versico Warranty. Additional requirements dictated by Regulatory Agencies, Building Insurance or Specifiers must be complied with and are considered to be beyond the scope of this specification.

3.01 General

A. Safety Data Sheets (SDS) must be on location at all times during transportation, storage and application of materials. The contractor shall follow all safety regulations as recommended by OSHA and other agencies having jurisdiction.

B. Subject to project conditions, it is recommended to begin the application of this roofing system at the highest point of the project area and work to the lowest point to prevent water infiltration. This will include completion of all flashings, terminations and daily seals.

C. A proper substrate shall be provided by the building owner. The structure shall be sufficient to withstand normal construction loads and live loads.

3.02 Roof Deck /Substrate Criteria

A. Proper decking shall be provided by the building owner. The building owner or its designated representative must ensure that the building structure is investigated by a registered engineer to assure its ability to withstand the total weight of the specified roofing system, as well as construction loads and live loads, in accordance with all applicable codes. The specifier must also designate the maximum allowable weight and location for material loading and storage on the roof.

B. Withdrawal resistance tests are strongly suggested to determine the suitability of a roof deck. Refer to **Design Reference DR-06-19 "Withdrawal Resistance Criteria"** in the Versico Technical Manual proper procedures for conducting pullout tests.

C. Defects in the substrate must be reported and documented to the specifier, general contractor and building owner for assessment. The Versico Authorized Contractor shall not proceed with installation unless defects are corrected.

D. On structural concrete decks, when a vapor retarder is not used, gaps in the deck along the perimeter and around penetrations must be sealed along with vertical joints between tilt-up panels, if present, to prevent infiltration of hot humid air and possible moisture contamination resulting from condensation. This is specifically important when adhesive is used to attach the roof insulation. (Migrating warm air through gaps left unsealed can result in condensation and weakening of the insulation bottom facer leading to possible board dislodgement.)

E. **For all projects** (new or retrofit), the substrate must be relatively even without noticeable high spots or depressions. Accumulated water, ice or snow must be removed to prevent the absorption of moisture in the new roofing components and roofing system.

F. Prior to the placement of membrane underlayment, clear the substrate of debris and foreign material that may be harmful to the roofing system. Gaps greater than 1/4" must be filled with an appropriate material.

G. For direct application over an acceptable roof deck/substrate or when HP Protective Mat is specified and approved by Versico as the membrane underlayment in accordance with the Roof Deck and Substrate Criteria Table, the substrate must be smooth, steel trowel finished (structural concrete), free of debris, protrusions, sharp edges and loose and foreign material. Cracks or voids in the substrate, greater than 1/4", must be filled with an appropriate material.

H. The following chart identifies the acceptable roof decks/substrates and the minimum underlayment requirements, Tables in Paragraph 1.05 for specific acceptable underlayment types, based on warranty duration:

Roof Deck & Substrate Criteria

TPO Membrane		Acceptable Roof Deck/Substrate
Adhered	Mechanically Fastened	**NEW CONSTRUCTION**
Insulation	Insulation	Steel (min. 22 gauge) (1)(2), Wood Plank (3/4" min.), or Fibrous Cement
Direct Application	Insulation	Structural Concrete (min. 3000 psi)
Direct Application (5)	Direct Application (5)	Plywood (min. 15/32" thick) or Oriented Strand Board (min. 7/16" thick)
Direct Application (5)(10)	Direct Application (5)	Lightweight Insulating Concrete
Adhered	Mechanically Fastened	**RETROFIT / NO TEAR-OFF**
Direct Application (9) (11)	Direct Application (9) (11)	Existing Smooth Surface BUR (3)(8) or Mineral Surface Cap Sheet
Insulation	Insulation	Gravel Surfaced BUR (3)(4) or Coal Tar Pitch (3)(4)(12)
Direct Application (7)(9)	Direct Application (7)(9)	Modified Bitumen (11)
Insulation	Direct Application (6)	Existing Single-Ply (11)
Complete Tear-off Required	Complete Tear-off Required	Sprayed-in-place Urethane
Adhered	Mechanically Fastened	**RETROFIT / TEAR-OFF**
Insulation	Insulation	Existing roof material removed (regardless of deck type)

Notes:
(1) Local codes must be consulted regarding thermal barrier requirements.
(2) Mechanically Fastened Systems cannot be specified on steel decks less than 22 gauge or for corrugated steel decks, regardless of gauge. Refer to the Metal Retrofit Roofing System Specification, published separately, for installation options.
(3) Loose gravel must be removed to avoid entrapment of moisture.
(4) Existing coal tar could drip back into the building, especially when new insulation does not provide sufficient thermal value to prevent the surface of the coal tar from softening.
(5) Maximum Warranty Duration of 20 Years.
(6) An approved underlayment is required over existing ballasted (ballast removed) single-ply systems and PVC roofing systems of any type.
(7) Direct application permitted over smooth surfaced modified bitumen. To reduce the probability of cold welds, membrane shall be positioned with length of sheets parallel to modified bitumen field seams. At end laps or other locations where splices intersect modified bitumen field seams, 6" wide VersiWeld Flashing must be heat welded over intersections.
(8) Existing Type III or IV smooth asphalt BUR Only.
(9) Possible staining/discoloration of the membrane may result when installing this system directly over existing smooth surfaced BUR or modified bitumen. If aesthetics are critical, an approved insulation should be specified beneath the membrane.
(10) New approved cellular lightweight insulating concrete must have a minimum compressive strength of 200 psi. Except when the lightweight concrete is poured over slotted steel decks, pressure relief vents must be installed every 2,000 square feet. Direct application is not permitted where lightweight concrete is poured over an existing roofing material. Equilibrium moisture content after hydration/curing shall not exceed 12%.
(11) Maximum warranty available 20 YR with 55 MPH peak gust wind speed coverage. Versico may be contacted for other warranty options.
(12) If insulation is specified to be secured to an existing coal tar pitch roof with Versico Flexible DASH Adhesive or hot asphalt, minimum 1.5” thick Polyisocyanurate is the required minimum thickness when white membrane is specified.

I. **On retrofit - recover projects**, cut and remove wet insulation, as identified by the specifier, and fill all voids with new insulation of type specified so it is relatively flush (+/- 1/4") with the existing surface.

1. Entrapment of water between the old and new membrane can damage and deteriorate new insulation/underlayment between the two membranes. **If a vapor retarder or air barrier is not specified**, Versico recommends the existing membrane be perforated to avoid potential moisture accumulation and to allow the detection of moisture to enable the building owner to take corrective action. This can be accomplished by drilling approximately 3/4" diameter holes every 100 square feet in the existing built-up roof or single-ply membrane (excluding non-reinforced PVC membrane).

2. If total removal of existing PVC membrane is not specified, existing non-reinforced membrane may be cut into maximum 10' x 10' sections, when the new insulation or membrane underlayment is to be mechanically attached.

3. Regardless of the type of membrane or assembly selected, any loose flashings at the perimeter, roof drains and roof penetrations must be removed.

4. When installing this roofing system over an existing **gravel surfaced built-up roof, loose gravel must be removed.** Power brooming is recommended by Versico to remove the loose gravel, which may trap moisture. Any uneven areas of the substrate must be leveled to prevent insulation from bridging.

7. On retrofit projects, all existing phenolic insulation must be removed.

8. Refer to table above for other Recover/Retro-fit considerations.

J. **Vapor Retarder Installation**

For Versico's Vapor Retarder refer to **Spec Supplement G-07-20 "Application Procedures for 725TR Air and Vapor Barrier"**. Follow the respective vapor retarder manufacturer's recommended installation procedures and the specifier's instructions for the installation of the product specified. When insulation is to be set in adhesive, verify compatibility with Versico when Vapor Retarder by others is specified.

K. **Wood Nailers**

1. Install wood nailers in locations that have been designated by the specifier and as approved by Versico. Refer to **Design Reference DR-08-11 "Wood Nailers and Securement Criteria"** for Wood Nailer Criteria.

2. Wood nailers are not covered by the Versico Warranty.

3.03 Insulation/Underlayment

A. **General**

1. Roof insulation thickness must be determined by the thermal value required for each project and may be subject to code approval limitations. On projects where a vapor retarder is used, the specifier must calculate insulation thickness to ensure the temperature at the vapor retarder will not fall below the dew point.

2. New construction projects in cold climate regions, the use of vapor retarders or air barriers is strongly recommended to protect insulation from moisture generated during construction.

3. Multiple layers of insulation are recommended with all joints staggered between layers.

4. Do not install more insulation/underlayment than can be covered by membrane in the same day.

5. All insulation boards must be butted together with no gaps greater than 1/4". Gaps greater than 1/4" are not acceptable.

6. Restrictions:

a) Versico Roofing Systems cannot be specified in conjunction with Phenolic Insulation.

b) Fiberglass insulation cannot be specified even if overlaid with additional insulation or membrane underlayment.

c) For all Thermoplastic Roofing Assemblies, the use of insulation by others is not acceptable when a Versico Membrane System Warranty is specified. Versico insulation must be used.

d) The direct application of VersiFlex Membrane over expanded or extruded polystyrene insulation is not permitted.

3.04 Insulation Attachment

A. **General**

1. Prior to proceeding with insulation securement refer to Warranty Tables, Paragraph 1.05, for attachment method and appropriate fastening density required for the specific Versico Warranty.

B. **Fully Adhered Roofing Systems**

1. **Mechanical Attachment**, insulation fastening density will vary based on insulation type, thickness, and required warranty. Warranty Tables in Paragraph 1.05 should be referenced for fastening density and the appropriate Versico detail may be consulted to identify acceptable fastening pattern.

a) For code compliance, increased fastening density may be required depending upon project wind speed and wind uplift requirement. Refer to **Design Reference DR-05-23 "Insulation Fastening Patterns"** for fastening pattern reference.

b) When insulation securement is to comply with Factory Mutual (FM) approvals, follow the requirements of the specifier concerning additional securement at the roof perimeter and corners. Also refer to **Design Reference DR-05-23 "Insulation Fastening Patterns"** for various fastening patterns.

c) On Reroof/No Tear off projects with a maximum roof height of 40', any Versico Insulation (i.e., 1/2" SecurShield HD, Versico Recovery Board, Polyisocyanurate less than 1-1/2" thick) may be secured at the minimum rate of 11 Fasteners per 4' x 8' board (5 Fasteners per 4' x 4' board).

d) When Oriented strand board (OSB) is specified for membrane underlayment, utilize DuraFaceR OSB/Polyiso Composite, mechanically fastened to the deck at the rate 17 fasteners for 4 x 8 board in accordance with Versico Details. When positioning OSB, butt edges and stagger joints of adjacent panels.

2. **Adhesive attachment**, Versico Urethane Adhesive (Flexible DASH or Olybond) may be used. When bead adhesive is specified bead spacing will vary based on Warranty coverage, refer to Warranty Tables, Paragraph 1.05 and appropriate Versico Details.

CAUTION: Apply adhesive bead so that the distance from the edge of the board does not exceed half the bead spacing (i.e. within 6" of bead spacing of 12" O.C.).

CAUTION: **Do not apply urethane adhesives directly to un-weathered asphalt, (new or residual)**.

CAUTION: **Especially in cold regions on tear-off projects or new construction gaps between horizontal and vertical surfaces of the roof area as well as gaps around penetrations must be sealed to prevent interior warm air from infiltrating and condensing within the roofing assembly. Condensing moisture could weaken bottom insulation facer and eventually result in dislodgement or loose boards when adhesive is used.**

a) On FM Global insured projects, consult FM Global's local representative concerning the use of adhesive to attach insulation to steel decks.

b) Check to ensure the substrate is clean, free of debris, other contaminants, and dry. Adhesive cannot be applied to a wet or a damp surface.

c) Apply Adhesive over the dry substrate area at the coverage rates indicated in **Spec Supplement G-02-22 "VersiFleece Membrane and Insulation Attachment with Flexible DASH Adhesive"**.

d) Allow the adhesive to rise up approximately 1/8" and develop strings prior to setting insulation boards into adhesive.

NOTE: String-time is measured by touching the adhesive with a splice wipe and looking for development of "strings" of adhesive as you pull the splice wipe out of the adhesive. With Flexible DASH Adhesive, string time is generally around 1-1/2 – 2 minutes after application at room temperature.

e) **Walk the boards into the adhesive and roll using the 30" wide, 150 pound weighted segmented steel roller** to ensure full embedment. Optimal set up time should be approximately 5 to 7 minutes.

CAUTION: Walking on the boards immediately after placement in adhesive can cause slippage/movement until the adhesive has started to set up.

On roofs with a slope greater than 1/2" in 12", begin adhering insulation at the low point and work upward to avoid slippage.

A person should be designated to walk/roll-in all boards and trim/slit or apply weight as needed to ensure adequate securement.

3. **Alternate attachment method**, the specifier may select an alternate insulation attachment that incorporates a solid mopping of the insulation with hot asphalt (ASTM D312, Type III or IV). If the attachment method is to be covered by the Versico Warranty, Versico must be contacted for specific requirements. Upon review and acceptance by Versico, the maximum warranty coverage available is limited to 15 Year with maximum Peak Gust Wind Speed Coverage of 55 mph, for other warranties contact Versico.

a) Extruded or Expanded Polystyrene insulation are not acceptable when this alternate attachment method is specified.

b) The existing gravel surfaced built-up roof must be scraped to remove all loose gravel. Large blisters that may prevent continuous embedment of insulation must be repaired. The surface of the substrate must also be dry and clear of foreign material.

c) On coal tar pitch, when deemed compatible by the specifier, minimum 1.5" Polyisocyanurate is the required membrane underlayment when using darker heat weldable membranes (tan or gray). If VersiWeld / VersiFlex white membrane is used, minimum 1" thick Polyisocyanurate is required.

d) For successful attachment, proper asphalt temperatures must be maintained and the specifier's requirements concerning the installation of a base sheet (where required) and quantity of hot asphalt must be followed.

e) The maximum insulation board size shall not exceed 4' X 4'. Trim insulation boards around crickets and saddles to ensure continuous embedment.

f) Care must be exercised to prevent contamination of the top surface of the insulation. Asphalt oozing through insulation joints must be wiped from the surface. Contact with fresh asphalt can result in discoloration of the VersiWeld / VersiFlex membrane.

g) A grid shall be installed subdividing the roof in individual sections of 2400 square feet. Required for warranties up to 10 years with wind speed coverage up to 55mph.

h) The wood nailers are installed relatively flush with the insulation surface and the membrane is to be fastened with seam fastening plates and Versico HPV or HPVX Fasteners on 12” o.c. For wood nailer installation, refer to **Design Reference DR-08-11 “Wood Nailers and Securement Criteria**”.

C. **Mechanically Attached Roofing Systems**

1. **Versico Fasteners and Fastening Plates are required for insulation securement**. Refer to Insulation Fastening Criteria Table in Paragraph 2.05 for appropriate fastener and deck penetration. The fastener can be used with either 2-3/8" diameter HPVX/HPV-XL Plates OR 3" diameter Insulation Fastening plate.

2. **Any Versico approved insulation or cover board** shall be mechanically fastened to the roof deck at the minimum rate of **1.25 fasteners and plates per every 8 square feet (**5 fasteners in a 4 x 8 board) for minimum 1-1/2” thick insulation and coverboards. Insulation less than 1-1/2” thick requires the use of 8 fasteners and plates in a 4’ x 8’ board (1 per 4 square feet).

   CAUTION: Versico Polyisocyanurate Insulation with a thickness less than 1.5" installed over an existing roofing membrane without a tear-off must be mechanically attached to the roof deck with a minimum of **1 fastener and plate for every 4 square feet** or less of insulation.

2. Use of DensDeck, DensDeck Prime and DensDeck StormX Prime should be limited to assemblies with slopes greater than 2” per foot to ensure compliance with external fire codes.

3.05 Membrane Placement and Securement

A. **General**

1. **Ensure** that water does not flow beneath any completed sections of the membrane system by completing all flashings, terminations and daily seals by the end of each workday.

2. **Sweep** all loose debris from the substrate.

3. If aesthetics are of concern, protection should be specified to avoid discoloration of the white membrane surface resulting from adhesive residue or excess foot traffic.

4. In addition to the primary membrane securement (Bonding for Fully Adhered and Fastening for Mechanically Attached Assemblies), additional membrane securement is required at the perimeter of each roof level, roof section, curb, skylight, interior wall, penthouse, etc., at any inside angle change where slope or combined slopes exceed 2" in one horizontal foot, and at other penetrations in accordance with the applicable Versico details. Refer to Paragraph F for additional membrane securement.

B. **Membrane Placement**

Maximum 12' wide VersiWeld Membrane is fully adhered or mechanically attached to an approved insulation or substrate.

1. **Position** VersiWeld membrane over the acceptable substrate. For a mechanically attached assembly ensure the proper number of perimeter sheets are positioned along the perimeter of the roof as outlined in Paragraph 1.05 "Warranty Tables".

2. **Position** field sheets perpendicular to the steel deck flutes in Mechanically Attached Applications.

3. **Place** adjoining membrane sheets in the same manner, overlapping edges appropriately to provide for the minimum overlap width. It is recommended all overlaps be shingled to avoid bucking of water.

C. **Membrane Securement / Bonding - Fully Adhered Roofing System**

1. **Adhere** VersiWeld membrane to an acceptable substrate with Versico Bonding Adhesive. CAV-GRIP 3V Low-VOC aerosol adhesive may be utilized with VersiWeld TPO membranes. Comply with Labels, Safety Data Sheet (SDS) and Technical Data Bulletins for installation procedures and use. Adhesive must be applied to both the membrane and the surface to which it is being bonded.

2. On projects at high altitudes (6,000' and above), rapid flash-off (drying) of Bonding Adhesive and Primers will occur due to low atmospheric pressure.

3. **Fold** membrane sheet back so half the underside is exposed. Sheet fold should be smooth without wrinkles or buckles.

4. **Stir** Bonding Adhesive thoroughly scraping the sides and the bottom of the can (minimum 5 minutes stirring is recommended). Bonding surfaces must be dry and clean.

5. **Apply** Bonding Adhesive to the exposed underside of the membrane and the corresponding substrate area. Do not apply Bonding Adhesive along the splice edge of the membrane to be heat welded over adjoining sheet.

   When using **VersiWeld Bonding Adhesive**, a coverage rate of approximately 120 square feet per gallon per one surface (membrane or substrate) or approximately 60 square feet per gallon per finished surface (includes coverage on both membrane and substrate) shall be achieved. **Apply** adhesive evenly, without globs or puddles with a plastic core, medium nap paint roller to achieve continuous coating of both surfaces. A 9-inch roller will easily fit into the 5-gallon containers.

   A mechanical roller dispenser can be used to apply Bonding Adhesive when the continuous coating and coverage rate noted above are maintained.

   CAUTION: Due to solvent flash-off, condensation may form on freshly applied Bonding Adhesive when the ambient temperature is near the dew point. If condensation develops, possible surface contamination may occur and the application of Bonding Adhesive must be discontinued. Allow the surface to dry and apply a thin freshener coat at the coverage rate which is approximately half the coverage rate stated above to the previously coated surface when conditions allow for continuing.

   NOTE: When Aqua Base 120 is specified refer to **Spec Supplement G-09-21 "Aqua Base 120 Bonding Adhesive**" for application methods and warranty requirements.

6. **Allow** adhesive to flash-off until it does not string but remains tacky to a dry finger touch.

   CAUTION: Care must be exercised to ensure proper drying. Avoid thin areas of adhesive because over drying can occur and proper adhesion may not be achieved.

7. **Roll** the coated membrane into the coated substrate while avoiding wrinkles.

8. **Brush** down the bonded section of the membrane sheet immediately after rolling the membrane into the adhesive with a soft bristle push broom to achieve maximum contact.

9. **HydroBond Adhesive** can be applied directly to the substrate using an airless spray machine or a medium nap roller. Do not apply HydroBond to splice areas to be hot-air welded. When applying HydroBond, ensure that the adhesive has not dried before the membrane is laid in place. This is a wet lay-in adhesive; drying occurs rapidly during high temperatures, and care must be taken to ensure the membrane is laid into wet adhesive. To ensure a wet lay-in, adjust the application technique according to weather conditions. Avoid heavy or thin application of adhesive. Roll the membrane into the wet, adhesive coated substrate while avoiding wrinkles. Immediately brush

down the bonded portion of the membrane with a soft-bristle push broom or a clean, dry roller applicator to achieve maximum contact and to work out any air bubbles. Immediately after brooming out from the center, roll the membrane in all directions with a minimum 100–150-lb (45–68 kg) weighted roller to achieve maximum contact.

NOTE: When using Hydrobond Adhesive, do not apply when the surface and/or ambient temperatures are below 40 degrees or when the temperature is expected to drop below 32 degrees within 72 hours of application. Hydrobond Adhesive is a wet lay-in, one-sided adhesive with coverage rate is 100-133 square feet per gallon finished surface.

10. **Fold** back the unbonded half of the sheet and repeat the bonding procedures. **Apply** Bonding Adhesive to the remaining exposed underside of membrane and adjacent substrate and complete this section as described above.

11. **Install** adjoining membrane sheets in the same manner, overlapping edges a minimum of 2 inches to provide for a minimum 1-1/2 inch heat weld. It is recommended that all splices be shingled to avoid bucking of water.

CAUTION: If aesthetics are of concern, protect completed sections of the roof so Bonding Adhesive will not discolor the membrane surface. Do not place Bonding Adhesive containers or their lids directly on the surface of the VersiWeld/VersiFlex membrane.

D. **Membrane Securement / Fastening - Mechanically Attached Roofing Systems**

1. VersiWeld membranes shall be mechanically attached to the structural deck with specified Versico Fasteners and designated Plates, for fastening densities and numbers of perimeter sheets refer to Warranty Tables, Paragraph 1.05.

2. Membrane Fastening Selection Table:

Membrane Fastener Selection

Deck Type	Versico Fasteners*	Versico Plate	Min. Penetration
Steel or Lightweight Insulating Concrete over Steel**	HPVX	HPVX Plates	3/4"
	HPV-XL	HPV-XL Plates	
Structural Concrete, rated 3,000 psi or greater	CD-10	HPVX Plates	1"
	MP 14-10	HPVX Plates	
Wood Plank, min. 15/32" thick Plywood or min. 7/16" OSB	HPVX	HPVX Plates	Min. 1"
	HPV-XL	HPV-XL Plates	
Cementitious Wood Fiber	Polymer Gyptec	Gyptec Plates – 2” Dia.	1-1/2"
Gypsum	Polymer Gyptec	Gyptec Plates – 2” Dia.	1-1/2"

Refer to Warranty Tables in Paragraph 1.05 for fastening densities and number of perimeter sheets.
*Determine proper fastener length for deck penetration, refer to Table 2.05B.

3. On steel decks, membrane shall be positioned with seams perpendicular to the steel deck flutes. This allows the external forces on the roof assembly to be distributed between multiple steel deck panels. Refer to **Design Reference DR-06-19 “Withdrawal Resistance Criteria”** in the Versico Technical Manual.

4. Perimeter Sheets

The number of perimeter sheets and fastener spacing is dependent on the building height, wind zone location and warranty duration as outlined in Warranty Tables in Paragraph 1.05.

The roof perimeter is defined as all edges of each roof section (i.e., parapets, building expansion joints at adjoining walls, penthouse walls, etc.). When multi-level roofs meet at a common wall, the adjacent edge of the upper roof is treated as a roof perimeter if the difference in height is greater than 10'. Perimeter sheets are not required at the base of the wall at the lower level.

NOTE: Expansion joints, control joints and fire walls in the field of the roof or roof ridges with slopes less than 3" to the horizontal foot are not considered as part of the roof perimeter.

For VersiWeld membranes, perimeter sheets can be formed by using individual 4’ to 6’ wide sheets or by sub-dividing 8’ or 10’ wide field sheet using 10” wide Pressure-Sensitive RUSS strip or row of seam fastening plates as described below.

a) **Individual perimeter sheets** (TPO – 4’, 5’ or 6’ wide)

Position membrane along the perimeter of the roof over the acceptable insulation/underlayment. The perimeter membrane width from line of securement to line of securement should be approximately 3'-6" to 4'-0" wide.

b) **RUSS - Reinforced Universal Securement Strip (VersiWeld Membrane Only)**

1) When **field sheets are positioned parallel to a roof perimeter, 10" wide VersiWeld Pressure-Sensitive RUSS** (with 3" wide tape each side) shall be placed approximately down the center of the 8'-0", 10'-0" or 12'-0" wide VersiWeld TPO field membrane sheets. When a RUSS divides a field sheet in half, two perimeter sheets are created.

2) When field membrane sheets **extend perpendicular to the edge of the roof**, position the **10" wide VersiWeld Pressure-Sensitive RUSS** beneath the membrane along the center of each field sheet extending a distance equal to 0.4 times the building height to create perimeter sheets.

CAUTION: 6" wide VersiWeld Pressure-Sensitive RUSS is only available with 3" wide QA Seam Tape on one side and therefore cannot be used to form perimeter sheets.

c) **Fastening Plates Method**

In lieu of the RUSS securement method, position a row of seam fastening plates in the locations identified in Paragraph 4.b.1 and 4.b.2, secure plates with appropriate fastener and overlay plates either 6" wide Pressure-Sensitive TPO Cover Strip (TPO Only) overlay the plates as follows:

1) VersiWeld Installation – Warranties Up to 20 Years – 6" wide Pressure-Sensitive TPO Cover Strip or 6" wide VersiWeld membrane centered over the plates and heat welded to the field membrane. Seal cut edges of TPO overlay with TPO Cut-Edge Sealant to seal any exposed scrim.

2) Projects with Warranties greater than 20 Years projects regardless of warranty duration center 6" wide section of TPO membrane (equal thickness to the deck membrane) over the plates and heat weld the field sheets. All cut edges of TPO overlay must be sealed with TPO Cut-Edge Sealant to seal any exposed scrim.

NOTE: Perimeter sheets can also be formed by positioning RhinoBond plates placed along the center of a field membrane (if heat induction welder is available on job-site). Refer to "Attachment I" for additional information.

d) **Building with Special Conditions:**

Air pressurized buildings, canopies and buildings with large openings where the total wall openings exceed 10% of the total wall area on which the openings are located (such as airport hangars, warehouses and large maintenance facilities) will typically require additional perimeter membrane securement, an increased fastening density or other enhancement.

e) **Buildings with large openings**

When any wall contains major openings with a combined area which exceeds 10% of the total wall area on which the openings are located, four (4) perimeter sheets (centered over the opening) must be specified as shown.

As an option to the above perimeter securement, a fully adhered membrane section may be used in lieu of the mechanically attached membrane at large openings in accordance with the Versico Specification for the VersiWeld Fully Adhered Roofing System.

NOTE: Depth of perimeter area, noted above, shall not be less than 2.5 times the width of the opening.

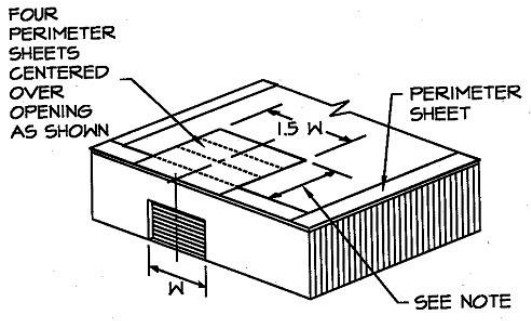

f) **Buildings with overhangs**

The membrane must be specified with perimeter sheets installed over the entire overhang area extending onto the main roof deck when at the same level.

As an option, a fully adhered membrane section may be used in lieu of the mechanically attached membrane at building overhangs in accordance with the Versico Specification for the VersiWeld Fully Adhered Roofing System.

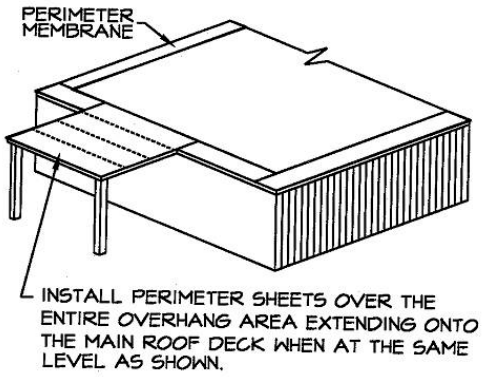

5. **Field Membrane**

a) **Position** adjoining field membrane sheets to allow an approximate overlap of 5-1/2" at those locations where Fastening Plates are located (along the length of the membrane); at the same time overlap end roll sections (the width of the membrane) a minimum of 2".

b) **Secure the membrane** at the approved fastening density with the required Versico Fastener and Fastening Plates.

c) For installation of membrane with fullness, tighten the sheet between fasteners as follows:

1) Unroll sheets and position.

2) Place a fastener and plate in one end of the sheet on the appropriate fastener mark. Go to the opposite end of the sheet, pull it tight and place a fastener and plate at the appropriate mark. Place the remaining fasteners into the sheet.

3) Proceed to weld the sheet in place and continue across the roof.

6. **Prevention of membrane distortion during windy conditions:**

a) Unroll sheet approximately 5' and position edge of membrane with overlap line on adjacent sheet.

b) Install fasteners along the 5' exposed edge.

c) While the 5' of exposed membrane is being fastened, begin welding the overlapped edge using the Automatic Heat Welder.

d) As sheet is being welded and fastened concurrently, unroll membrane. Unroll only enough membrane to stay a few feet ahead of welding and fastening process. This reduces amount of unsecured membrane to be distorted by wind.

e) Continue this process for each adjoining sheet.

E. **VersiWeld QA (Quick-Applied TPO) – Quick-Applied Roofing System (membrane bonding)**

10’ wide VersiWeld QA TPO is fully adhered to an approved insulation or substrate with Factory Applied Quick-Applied Adhesive.

1. **Position** VersiWeld QA TPO membrane over the acceptable substrate.

2. **Fold** membrane sheet back so half the underside is exposed.

3. **Remove** the release liner on one half of the sheet starting from the split in the liner at the middle of the sheet. The liner should be removed at an angle to reduce risk of splitting or tearing.

4. **Roll** the membrane onto the substrate while avoiding wrinkles. To achieve the best adhesion, the membrane should be rolled onto the substrate at an angle with 30” wide 150 lb weighted segmented roller. When applying

the VersiWeld QA TPO membrane it is recommended to maintain a large curve on the leading edge of the membrane. This will help eliminate creases and bubbles that cannot be removed after the sheet is in place.

5. **Fold** back the remaining half of the sheet and repeat the above process.

F. **Additional Membrane Securement**

1. Securement must be provided at the perimeter of each roof level, roof section, expansion joint, curb, skylight, interior wall, penthouse, etc., at any inside angle change where slope exceeds 2 inches to one horizontal foot, and at all penetrations as identified on the Versico details.

2. Securement may be achieved as follows:

   a) On Mechanically Attached Roofing Systems, Versico's HPVX Fastening Plates are used to secure the membrane with the appropriate Versico Fastener at the base of walls and penetrations and flashed as shown on the applicable Versico detail (excluding OSB, cementitious wood fiber and gypsum decks where the required Versico Fastener is installed with the associated 2" diameter plate). On **Fully Adhered Roofing Systems**, Versico standard 2" diameter Seam Fastening Plates may be used in lieu of HPVX Plates.

   b) Securement of the membrane shall be a maximum of 12 inches on center. Starting 6 inches minimum to 9 inches maximum from the inside or outside corner.

   c) On Mechanically Attached assemblies, additional membrane securement is required around pipes and sealant pockets as shown on the applicable detail. The plates must be positioned a maximum of 12" away from the penetration, spaced a maximum of 12" on center and flashed in accordance with the applicable Versico Detail.

   d) After securing the membrane, flash in accordance with the appropriate detail.

3.06 Heat Welding Procedures

A. **General**

1. APEEL Protective Film should be removed from within areas that are to be heat-welded together. In areas that do not require heat welding, the APEEL Protective Film can be left in place for up to 90 days.

2. Heat weld the VersiWeld membrane sheets using the Automatic Heat Welder or Hot Air Hand Welder and silicone roller.

3. When roof slope exceeds 5" per horizontal foot, use of the Automatic Heat Welding Machine may become more difficult; use of the Handheld Hot Air Welder is recommended.

4. **Check the surfaces** of the membrane to be heat welded to ensure they are properly prepared.

   The surfaces to be heat welded must be clean. Membrane overlaps that become contaminated with field dirt must be cleaned with Weathered Membrane Cleaner. Weathered Membrane Cleaner should be wiped dry with a clean Splice Wipe prior to welding. No residual dirt or contaminants should be evident.

B. **Automatic and/or Handheld Heat Welder Equipment**

Refer to **Spec Supplement T-01-23 "Heat Welding Equipment"** for:
a) Temperature Settings
b) Equipment Set-up
c) Additional Information

C. **Membrane Welding**

1. Prepare the Automatic Heat Welder and allow it to warm for approximately 5 to 10 minutes to reach operating temperature.

2. Position the Automatic Heat Welder properly prior to seaming with the guide handle pointing in the same direction the machine will move along the seam.

3. Lift the overlapping membrane sheet and insert the blower nozzle of the Automatic Heat Welder between the overlap. Machine will begin moving along the seam immediately.

4. Weight plates provided on Automatic Welders must be utilized.

5. Proceed along the seam ensuring that the small guide wheel in front of the machine aligns with the edge of the top membrane sheet. Guide the machine from the front only.

   CAUTION: Ensure the power cord has plenty of slack to prevent dragging the machine off course (which could result from a tightly stretched cord).

6. At all splice intersections, roll the seam with a silicone roller to ensure a continuous heat welded seam (the membrane should be creased into any membrane step-off with the edge of the silicone roller). A false weld may result due to surface irregularities created by multiple thicknesses of VersiWeld/VersiFlex membrane sheets.

   When using **60-mil or 80-mil** VersiWeld, a **TPO "T" Joint Cover** must be applied over all "T" joint splice intersections.

7. To remove the Automatic Heat Welder from the finished splice, disengage and pull the nozzle from the seam area, the machine will stop automatically.

8. Mark the end of the heat welded seam with a water-soluble marker for easy identification. A Handheld Welder will be necessary to complete the weld in the area between where the Automatic Heat Welder is stopped and restarted.

9. Perform a test weld, at least, at the start of work each morning and afternoon. Test welds should be made if any changes in substrate or weather conditions occur.

10. All membranes, at end laps, a minimum 6" wide, reinforced coverstrip must be used in conjunction with applicable primer.

D. **Preventing Membrane Creeping During Welding**

1. The operator of automatic welding equipment must apply foot pressure to the membrane, keeping the membrane tight under the welder. Refer to **Spec Supplement T-01-23 "Heat Welding Equipment"** for additional information.

E. **Test Cuts**

1. Perform a test weld at least at the start of work each morning and afternoon. Refer to **Spec Supplement T-01-23 "Heat Welding Equipment"** for additional information.

F. **Seam Probing**

1. A cotter pin puller or Versico TPO Seam Probe is recommended to probe all heat-welded seams. Probing seams must be done once heat welds have thoroughly cooled. Refer to **Spec Supplement T-01-23 "Heat Welding Equipment"** for additional information.

G. **Cut-Edge Sealant**

1. Apply Cut-Edge Sealant on all cut edges of the VersiWeld reinforced membrane (where the scrim reinforcement is exposed) **after seam probing** is completed. When a 1/8" diameter bead of TPO Cut-Edge Sealant is applied, approximately 225 – 275 linear feet of coverage per squeeze bottle can be achieved.

   a) Cut-Edge Sealant is not required on vertical VersiWeld splices.

3.07 Welding Problems / Repairs

A. A Handheld Hot Air Welder and a 2" wide silicone roller must be used when repairing the VersiWeld/VersiFlex membrane. When the **entire** heat welded **seam** is to be **overlaid**, an **Automatic Heat Welder** may be used.

B. Prior to proceeding with any repair procedure, the area to be repaired must be cleaned with Weathered Membrane Cleaner. The membrane can typically be repaired with standard cleaning methods. In cases where the standard cleaning method is not sufficient, the following procedures must be used.

1. Scrub the area to be welded with a "Scotch Brite" Pad and Weathered Membrane Cleaner.

2. Clean all residue from the area to be welded with a Splice Wipe or a clean natural fiber (cotton) rag.

3. Weld the new membrane to the cleaned area using standard welding procedures.

C. Voids in welded seams can be repaired using a Handheld Hot Air Welder and a silicone roller. Depending on conditions, a splice overlay may be required.

D. Position the handheld welder facing into void so hot air is forced between overlapping membranes. Roll the top membrane surface using positive pressure toward the outer edge until the heated membrane surfaces are fused.

E. Exposed scrim-reinforcement (resulting from scorching surface of membrane) and test weld areas must be repaired by overlaying the damaged area with a separate piece of VersiWeld reinforced membrane with rounded corners. The overlay must extend a minimum of 2 inches past the area to be repaired.

F. **Probe** all edges of the overlay once cooled to ensure a proper weld has been achieved.

G. **Seal** all cut edges of VersiWeld reinforced membrane with TPO Cut-Edge Sealant.

Note: The same overlay repair procedures may be used for puncture in the VersiWeld membrane.

3.08 Flashings

A. General Considerations

1. The height of new wall flashing must extend above the anticipated water level or slush line.

2. On 15- or 20-year warranty projects, Versico's Termination Bar, in conjunction with Water Cut-Off Mastic, must be specified under all metal counterflashings and surface mounted reglets.

3. To comply with various warranty options, flashing material must equal the required minimum membrane thickness but shall not be less than 60 mils thick. For projects with 20 year or greater warranties Versico Pre-Fabricated accessories must be used when feasible.

4. All Projects, regardless of Warranty Duration, shall incorporate Versico supplied pre-fabricated accessories to seal pipes, corners, sealant pockets, etc., when feasible. When field fabrication is required, the flashing material shall not be less than 60-mils thick.

5. For wall and curb flashing, the required thickness shall equal the deck membrane thickness.

6. **On Retrofit Projects**

   Bitumen-based roof cement and asphaltic-based flashing material, if allowed to remain in contact with the membrane, will cause severe membrane discoloration. Existing wall and curb flashing must be removed or concealed with a new acceptable substrate.

   a) The specifier must examine structural supports for rooftop equipment to determine if reasonable access to the membrane beneath the equipment is provided. Versico should be consulted for clarification when access to the membrane system will be restricted.

   b) When hot pipes or other similar penetrations exceed 160°F (71°C) (TPO), they must be designed to incorporate an insulated metal collar and rain hood designed to maintain a surface temperature less than 160°F (71°C) (TPO).

7. When possible, all reinforced membrane splices are heat welded with the Automatic Heat Welder. The Hand Held Hot Air Welder should be utilized in hard to reach areas, smaller curbs, vertical splices and when using non-reinforced membrane.

   a) The new VersiWeld/VersiFlex membrane flashing must not conceal weep holes or cover existing throughwall flashing.

   b) Install surface mounted reglets and compression bar terminations directly to the wall surface.

8. In areas where metal counterflashing or surface mounted reglets are used as vertical terminations, the counterflashing must be sealed with a rubber grade caulking to prevent moisture migration behind the new wall flashing.

B. Application of Bonding Adhesive

1. Membrane shall be fully adhered to vertical surfaces with VersiWeld Bonding Adhesive. CAV-GRIP 3V low-VOC aerosol adhesive may be utilized with VersiWeld TPO membranes. The Bonding Adhesive shall be applied continuously, without globs or puddles.

2. **Allow** adhesive to flash-off until it is tacky but will not string or transfer to a dry finger touch.

3. Roll the membrane into the adhesive.

4. Care must be taken when setting the flashing to avoid bridging greater than 3/4 inch at angle changes (i.e., where a parapet or roof penetration meets the roof deck). This can be accomplished by creasing the membrane into the angle change.

5. Terminate the edges of the installed membrane in accordance with Versico's applicable details.

6. When using TPO membrane flashing only, bonding adhesive is not required when the flashing height is 12” or less. When Versico termination bar is used beneath the counter-flashing, bonding adhesive can be eliminated when the flashing height is 18” or less.

C. **Walls, Parapets, Curbs, Skylights, etc.**

The flashing height must be calculated so that the membrane flashing includes a minimum 1-1/2 inch heat weld beyond the Fastening Plates.

1. Fasten at angle change as identified in **Paragraph 3.05 F**, Additional Membrane Securement, with the required Versico Fastener and plate.

2. Flash the fasteners/plates with a separate piece of VersiWeld reinforced membrane; apply heat and crease the flashing into the angle change before attaching it to the vertical surface.

D. **Metal Edge Terminations**

Factory-fabricated metal edge systems must be secured to the wood nailer as specified by the manufacturer. Shop-fabricated edging must be installed in compliance with appropriate Versico Detail using Versico TPO Coated Metal in order to achieve ES-1 Compliance. Refer to the appropriate Universal Details for other flashing options and requirements.

E. **Roof Drains**

1. VersiWeld membrane may extend into the drain sump when the slope of the sump is less than 3" to one horizontal foot.

   When the drain sump is greater than 3" to one horizontal foot, additional membrane securement must be installed.

2. Only drain strainers that have been approved by the specifier in accordance with applicable codes may be used.

F. **VersiWeld/VersiFlex Rib Profiles**

1. VersiWeld Rib Profiles are recommended for use with VersiFleece TPO adhered roofing systems.

2. The VersiWeld Rib Profiles should be positioned parallel to the laps of the installed TPO roofing system and parallel with the roof slope where possible.

3. Ensure that all welding surfaces are clean and dry. Inspect all seam areas for proper weld prior to installing VersiWeld Rib Profile.

4. Rib Profile spacing can be individually determined to achieve the desired appearance.

5. Connecting multiple ribs is achieved by using fiberglass pins. Insert a pin half-way into the end of one profile. Connect the adjoining rib by inserting the exposed end of the pin into the alignment hole. Repeat previous steps for additional TPO Rib profiles.

6. Consult the VersiWeld Rib Profile installation guides for instructions on proper installation techniques.

G. **Other Penetrations**

On Mechanically Attached assemblies, additional membrane securement is required around pipes and sealant pockets as shown on the applicable detail. The plates must be positioned a maximum of 12" away from the penetration, spaced a maximum of 12" on center and flashed in accordance with the applicable Versico Detail.

1. **Pipes, Round Supports, etc.**

   a) Flash pipes with Molded Pipe Flashings or Split Pipe Seals where their installation is possible. Molded pipe flashings cannot be cut and patched; deck flanges cannot be overlapped or installed over angle changes.

   b) Where Molded Pipe Flashings or Split Pipe Seals cannot be installed, APPLY FIELD FABRICATED PIPE FLASHING using VersiWeld non-reinforced membrane.

2. **Flexible Penetrations** (braided cables, conduits, wires, etc.) must be enclosed in a stable "goose neck." Apply a Split Pipe Seal or field fabricated pipe flashing to flash the goose neck.

3. **Hot pipes** that exceed 160°F (71°C) (TPO), must utilize an insulated metal collar and rain hood, flashed with a field fabricated pipe flashing.

4. For **pipe clusters** or unusually shaped penetrations, a Molded Sealant Pocket and White One-Part Sealant must be utilized.

5. **Existing Roof Tie-Ins** for TPO membranes refer to applicable Versico details for tie-ins.

6. **Flashing of Difficult Penetrations,** refer to **Spec Supplement G-11-20** for "LIQUISEAL Liquid Flashing" for additional information and specific requirements.

H. **APEEL Protective Film (Optional)**

When the optional APEEL Protective Film is utilized on TPO, remove and discard the APEEL Protective Film after the installation of the entire TPO Roofing System is complete.

3.09 Roof Walkways

Walkways are to be specified at all traffic concentration points (i.e., roof hatches, access doors, rooftop ladders, etc.), and if regular maintenance (once a month or more) is necessary to service rooftop equipment. **Refer to Spec Supplement G-05-21 "Roof Walkway Installation"**.

3.10 Daily Seal

On phased roofing, when the completion of flashings and terminations is not possible by the end of each workday, provisions must be taken to temporarily close the membrane to prevent water infiltration. **Refer to Spec Supplement G-06-20 "Daily Seal & Clean Up"**.

Copyright 2024 Versico Roofing Systems
Versico, VersiWeld, VersiCore, VersiTrim, DuraFaceR, LIQUISEAL and Flexible DASH are Trademarks of Versico

Insulfoam, InsulLam and R-Tech are Trademarks of Insulfoam
Thermapink, Foamular and Durapink are Trademarks of Owens Corning
DensDeck, DensDeck Prime and DensDeck StormX Prime are Trademarks of Georgia-Pacific Corporation
Securock is a Trademark of USG
Styrofoam is Trademark of the DOW Chemical Company
Olybond is a Trademark of OMG, Inc.

This specification represents the applicable information available at the time of its publication. Owners, specifiers and Versico Authorized Roofing Contractors should consult Versico or their Versico Independent Sales Representative for any information, which has subsequently been made available.

Review the appropriate Versico warranty for specific warranty coverage, terms, conditions and limitations.

SPECIFICATION
ATTACHMENT

VersiWeld TPO Mechanically Fastened Roofing Systems
Induction Welding (RhinoBond / Isoweld) Attachment Method

"Attachment I"

January 2024

This is an alternate method for securing the Versico's VersiWeld (TPO) membrane and is intended to be used in conjunction with the Versico's VersiWeld Mechanically Attached Specification and Details.

A. Description

The Induction Welding (RhinoBond/Isoweld) Attachment Method incorporates 3" diameter corrosion-resistant plate with a hot melt TPO coating. The Plates are installed with HPVX Fasteners to secure an acceptable insulation to minimum 22 gauge steel deck or minimum 15/32" thick plywood.

Versico's Polyester Reinforced Thermoplastic membrane is positioned over the secured RhinoBond or Isoweld plates and welded to the surface using the RhinoBond or Isoweld Induction Welding Tool.

Induction Welding (RhinoBond/Isoweld) Attachment Method Limited to 30 year maximum warranty and wind speed coverage up to 120 mph. Perimeter enhancements will be required on systems greater than 72 mph and/or projects over 50' in height. Contact Versico for requirements for enhancements.

Table I **Induction Welded - Membrane Systems Warranty Options**

Years	VersiWeld TPO		
	Warranty Wind Speed 55, 72, 80 or 90 mph	Minimum Membrane Thickness (1)	Additional Puncture Coverage
5,10, or 15 year	√(2)	VersiWeld 45-mil	Not Available
20 year	√(2)	VersiWeld 60-mil	Not Available
25 or 30 year	√(2)	VersiWeld 80-mil	Not Available

Notes: √= Acceptable

(1) All "T-Joints" must be overlaid with appropriate flashing material when using 60- or 80-mil TPO membrane.
(2) Perimeter calculation is .4 x height of building. The minimum perimeter width is 8-feet up to a 20-year warranty and 16-feet for 25-30 year warranty. Perimeter enhancements required for wind speed coverage greater than 72mph and/or projects over 50' in height. Contact Versico for requirements.

Induction Welded – Induction Plate Density
for Induction Welded Roofing Systems
(Up to 20 YR Warranty)

Table II

Peak Gust Wind Speed Warranty	Max. Building Height	Minimum Perimeter Width	Induction Weld Plate Density		
			Field	Perimeter	Corners
55 MPH	Up to 50'	8'	6	8	8
72 MPH	Up to 50'	8'	6	8	8
80 MPH	Up to 50'	8'	8	10	10
90 MPH	Up to 50'	8'	8	12	12
100 MPH	Up to 50'	8'	8	12	16
110 MPH	Up to 50'	8'	10	16	16
120 MPH	Up to 50'	8'	10	16	20

Table III

Induction Welded – Induction Plate Density for Induction Welded Roofing Systems (Up to 30 YR Warranty)

Peak Gust Wind Speed Warranty	Max. Building Height	Minimum Perimeter Width	Induction Weld Plate Density		
			Field	Perimeter	Corners
55 MPH	Up to 50'	16'	8	10	10
72 MPH	Up to 50'	16'	8	10	10
80 MPH	Up to 50'	16'	10	12	12
90 MPH	Up to 50'	16'	10	12	12
100 MPH	Up to 50'	16'	10	16	20
110 MPH	Up to 50'	16'	12	16	24
120 MPH	Up to 50'	16'	12	16	24

B. Products/Heat Welding Equipment

Products listed in "Part II" of the Versico VersiWeld Mechanically Fastened Roofing System Specification can be used as part of this alternate securement method in conjunction with the RhinoBond or Isoweld Welding Plates.

1. **RhinoBond or Isoweld TPO or PVC Welding Plate:** A 3" diameter, 0.028" thick, corrosion-resistant steel plate with high solids coating on the top surface. The plate is used in conjunction with Versico's HPVX Fasteners to attach the roofing assembly and is activated using the RhinoBond or Isoweld Induction Welding Tool.

2. **RhinoBond or Isoweld Induction Welding Tool:** An induction heating tool is used to emit the magnetic field that activates the hot melt coating on the top surface of the RhinoBond or Isoweld Welding Plate to fuse with the roofing membrane. Refer to RhinoBond or Isoweld Owner's Manual for additional information.

3. **Magnet:** A stand-up device that allows the weld to cool as it holds the membrane to the heated plate. Refer to RhinoBond or Isoweld Owner's Manual for additional information.

C. RhinoBond Induction Tool Calibration

Prior to proceeding with membrane attachment to the plate, the RhinoBond Induction Welding Tool must be calibrated with samples of the project specified insulation thickness and type and project specified membrane thickness. Refer to RhinoBond Owner's Manual for additional information.

1. Loose lay five RhinoBond Plates in a row about 12-24" apart or the specified membrane substrate.

2. Place membrane over the RhinoBond Plates.

3. Centering over the RhinoBond Plate under the membrane, place the Induction Welding Tool and use the device's default setting. Weld the membrane to the first plate, and when ready, completely remove Welding Tool. Immediately place the Magnet on the membrane over the plate and leave in place for 60 seconds.

4. Place Induction Welding Tool on the next plate as previously done and increasing the induction energy one level by depressing the "up" button once. After welding, immediately place the Magnet.

5. Repeat above procedure for the remainder of the plates, increasing induction energy one level for each plate.

6. After allowing the membrane and plates to cool to ambient temperatures, remove Cooling Clamp and use a pair of pliers and apply force to peel RhinoBond Plate from underside of membrane to determine bonding strength. Desired result is welded ply membrane stays fused to RhinoBond Plate.

7. Repeat trial process, if needed, adjusting energy level up or down until desired results are achieved.

NOTE: Recalibrating induction tool settings is necessary when ambient temperature changes more than +/- 15°F or power to device have been interrupted.

D. Isoweld Induction Tool Calibration

Calibrate the Isoweld induction welding tool using the process outlined in the Owner's Manual.

E. Installation

Caution: To avoid false welds and ensure adequate membrane attachment to the plates, induction tool calibration and test welds (along with the proper positioning of the induction welder over the plate and placement of the magnet) must be performed prior to the start of work each day. All test welds must be completed using the exact components of the assembly to be installed.

1. After placement of insulation on substrate, secure the insulation at a rate of six HPVX Fasteners and RhinoBond or Isoweld Plates per 4' x 8' in the designated field and eight HPVX Fasteners and RhinoBond or Iswoeld Plates around the perimeter. Refer to appropriate Versico details for patterns and depth of perimeter area.

   NOTE: Avoiding fastener overdrive to prevent plate from deforming.

2. Place VersiWeld or VersiFlex membrane over the appropriate RhinoBond or Isoweld Plates and allow membrane to relax.

3. Place RhinoBond Induction Tool centered over the RhinoBond TPO or PVC Welding Plate, under the roofing membrane OR Place the Isoweld Induction Tool over the Isoweld TPO or PVC Welding Plate, until the acoustic search mode signals the inductor is properly positioned.

4. Activate induction welding tool and leave in place until heating cycle is complete.

5. Immediately place Magnet on the membrane over the plate and leave in place for at least 60 seconds.

6. Resume process ensuring membrane is attached to all plates.

F. Membrane Hot Air Welding Procedures & Additional Securement

1. Adjoin membrane sheets by overlapping and heat welding the seam following standard Hot Air Welding Procedures as outlined in the "Part III" of the VersiWeld TPO Mechanically Attached Roofing System Specification.

2. Base wall securement and securement around roof penetrations as well as flashings of walls and penetrations must comply with Versico requirements for the VersiWeld TPO Mechanically Attached Roofing System.

G. Associated Installation Details

RhinoBond Attachment Method – Number of Fasteners and Location…… RB-1
Angle Change Securement Method RhinoBond Plates…… RB-2
Induction Welded Wall Attachment RB-3
Isoweld Attachment Method – Number of Fasteners and Location……IW-1
Angle Change Securement Method with Isoweld Plates……IW-2
Induction Welded Wall Attachment…… IW-3
Induction Welding Attachment Method – Fastening Patterns/Enhancements ……FP-1
Induction Welding Attachment Method – Fastening Patterns/Enhancements ……FP-2

End of Section

NOTES:

1. RhinoBond METHOD OF MEMBRANE ATTACHMENT IS NOT FOR USE WITH NON-FACED EPS (EXPANDED POLYSTYRENE) OR XPS (EXTRUDED POLYSTYRENE) INSULATIONS.
2. PERIMETER ENHANCEMENTS REQUIRED FOR WIND SPEED COVERAGE GREATER THAN 72MPH. CONTACT VERSICO FOR REQUIREMENTS.
3. ENHANCEMENT SHOWN ARE FOR THE PURPOSE OF THE VERSICO WARRANTY. FOR FM PROJECTS CONSULT FM GLOBAL FOR REQUIRED ENHANCEMENTS.

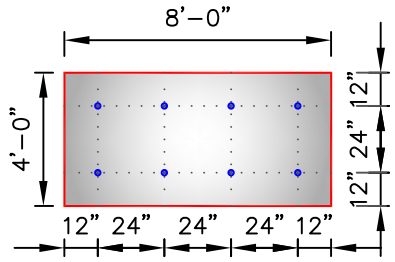

(A) PERIMETER ZONE
8 FASTENERS PER 4'X8' BOARD

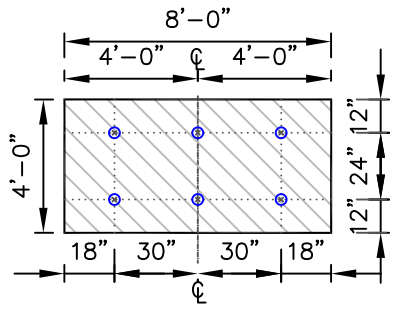

(B) FIELD OF ROOF
6 FASTENERS PER 4'X8' BOARD

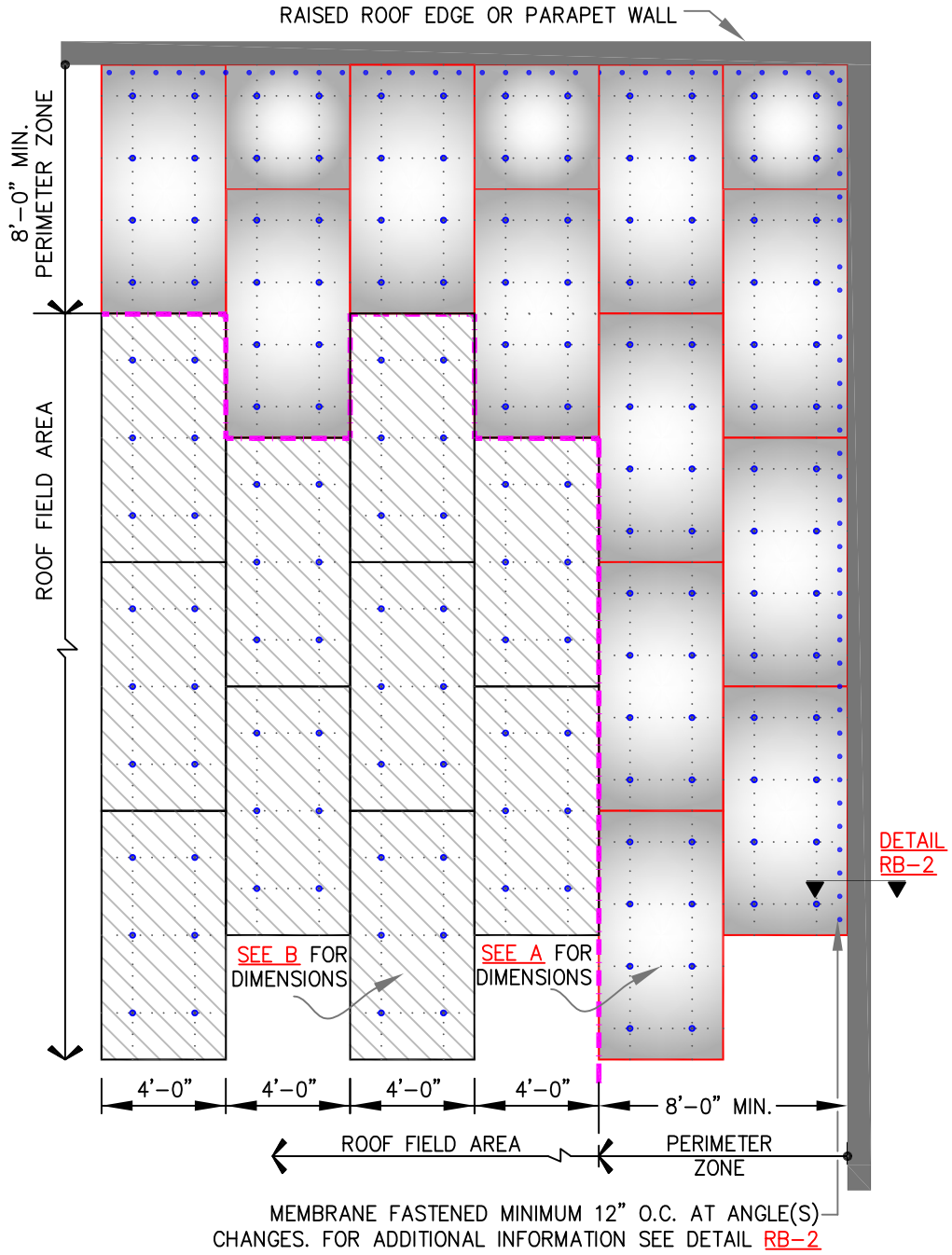

PERIMETER AREA

FIELD AREA

VERSICO FASTENER & RhinoBond FASTENER PLATE

DECK TYPE	DECK THICKNESS	FASTENER	THERMOPLASTIC COATED PLATE
STEEL	22 GAUGE (0.8mm)	VERSICO HPVX FASTENER	3-1/8" (8cm) DIAMETER
PLYWOOD	15/32" (12mm)		
NOTE: AT IN-FILL MINOR PIECES, USE MIN. 2 FASTENERS.			

INCHES TO CENTIMETERS							
inch	2"	3.5"	4"	12"	18"	24"	30"
cm	5	9	10	30	46	61	76

FEET TO CENTIMETERS			
FEET	1'	4'	8'
cm	30	122	244

VERSICO ROOFING SYSTEMS
©2024 VERSICO

RhinoBond ATTACHMENT METHOD-NUMBER OF FASTENERS AND LOCATION

VERSICO RhinoBond

RB-1

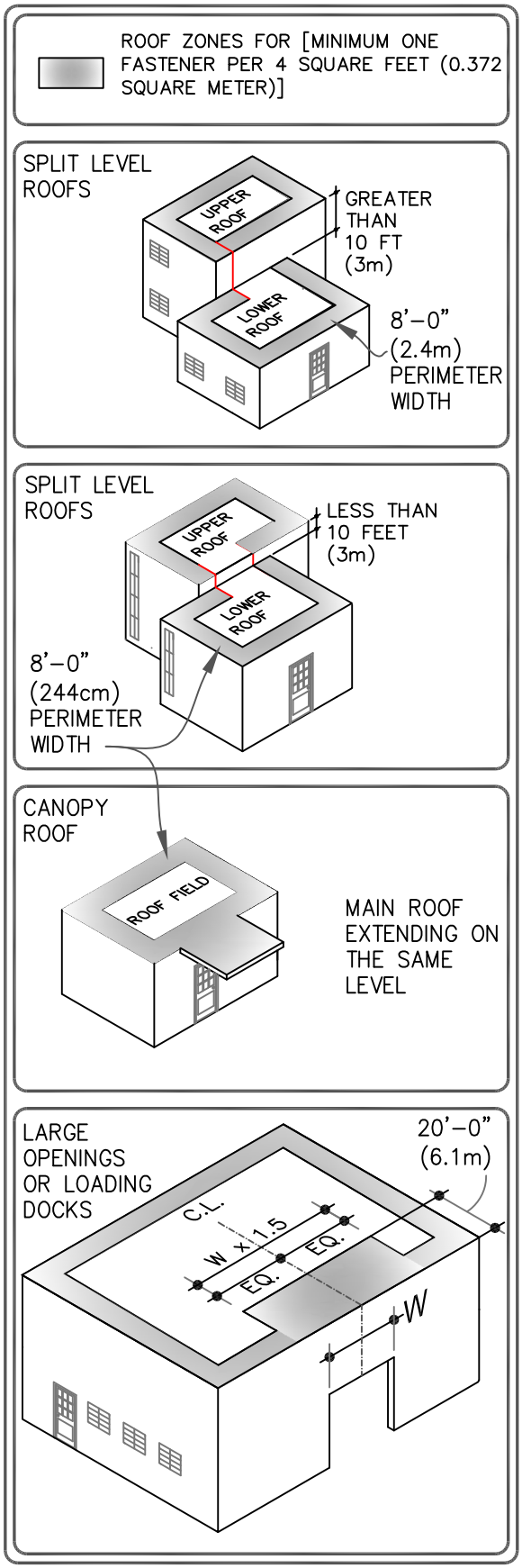

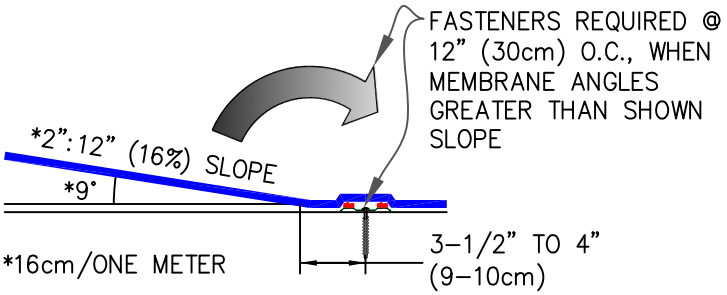

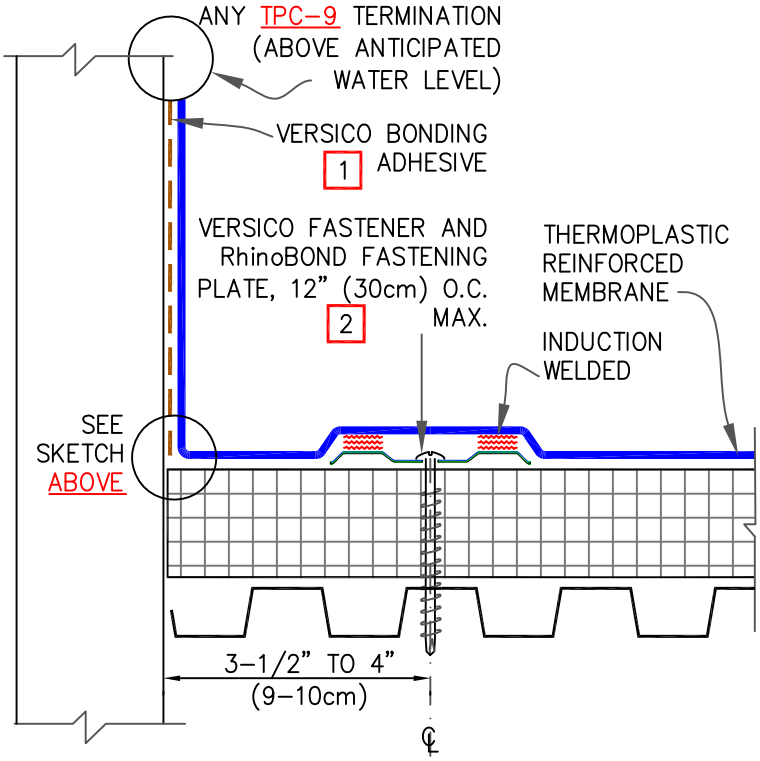

ANGLE CHANGE SECUREMENT

NOTES:

1. VersiWELD MEMBRANE REQUIRES VersiWELD BONDING ADHESIVE AND VersiFLEX MEMBRANE REQUIRES VersiFLEX BONDING ADHESIVE.

2. HPVX FASTENERS AND RhinoBOND PLATES ARE REQUIRED OVER STEEL AND WOOD DECKS. FOR WARRANTY WIND SPEEDS GREATER THAN 72 MPH PLEASE CONTACT VERSICO FOR REQUIRED FASTENING ENHANCEMENTS

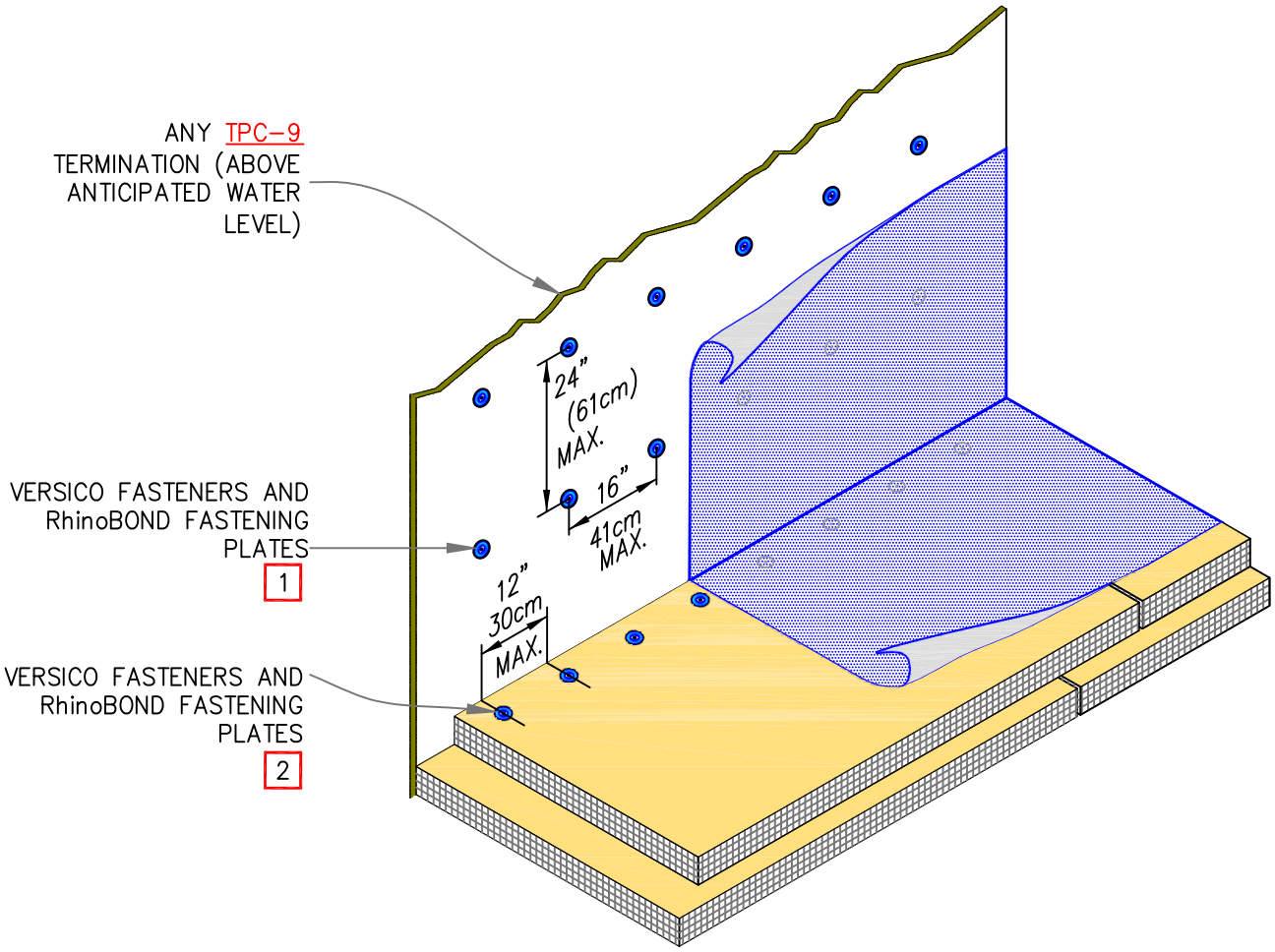

NOTES:

1. FASTENERS MUST PENETRATE INTO WOOD OR METAL STUDS, WHERE WALL IS BUILT WITH STUDS.

2. HPVX FASTENERS AND RhinoBOND PLATES ARE REQUIRED OVER STEEL AND WOOD DECKS.

NOTES:

1. Isowled METHOD OF MEMBRANE ATTACHMENT IS NOT FOR USE WITH NON-FACED EPS (EXPANDED POLYSTYRENE) OR XPS (EXTRUDED POLYSTYRENE) INSULATIONS.

2. PERIMETER ENHANCEMENTS REQUIRED FOR WIND SPEED COVERAGE GREATER THAN 72MPH. CONTACT VERSICO FOR REQUIREMENTS.

3. ENHANCEMENT SHOWN ARE FOR THE PURPOSE OF THE VERSICO WARRANTY. FOR FM PROJECTS CONSULT FM GLOBAL FOR REQUIRED ENHANCEMENTS.

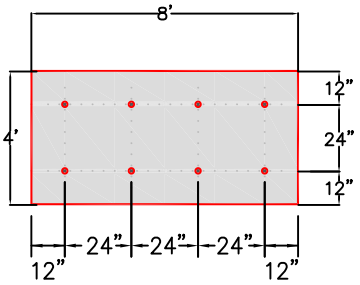

(A) PERIMETER ZONE
8 FASTENERS PER 4'X8' BOARD

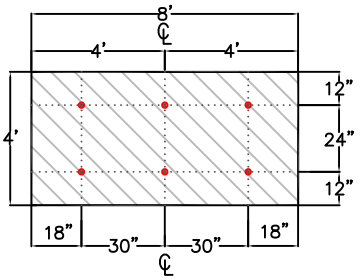

(B) FIELD OF ROOF
6 FASTENERS PER 4'X8' BOARD

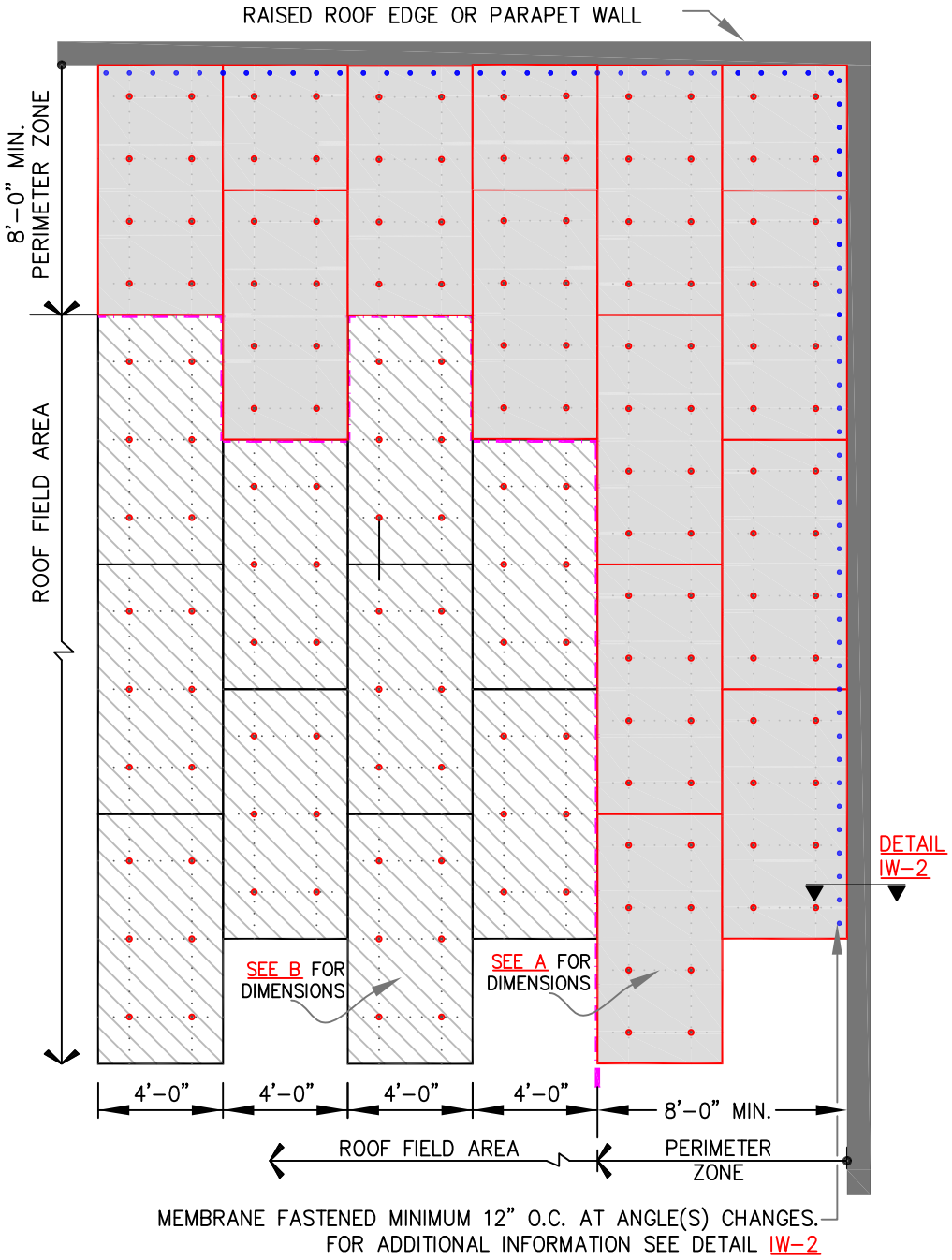

PERIMETER AREA

FIELD AREA

VERSICO FASTENER & Isoweld FASTENER PLATE

DECK TYPE	DECK THICKNESS	FASTENER	THERMOPLASTIC COATED PLATE
STEEL	22 GAUGE (0.8mm)	VERSICO HPVX FASTENER	3-1/8" (8cm) DIAMETER
PLYWOOD	15/32" (12mm)		
NOTE: AT IN-FILL MINOR PIECES, USE MIN. 2 FASTENERS.			

INCHES TO CENTIMETERS							
inch	2"	3.5"	4"	12"	18"	24"	30"
cm	5	9	10	30	46	61	76

FEET TO CENTIMETERS			
FEET	1'	4'	8'
cm	30	122	244

VERSICO ROOFING SYSTEMS
©2024 VERSICO

ISOWELD ATTACHMENT METHOD – NUMBER OF FASTENERS AND LOCATIONS

VERSICO Isoweld Attachment

IW – 1

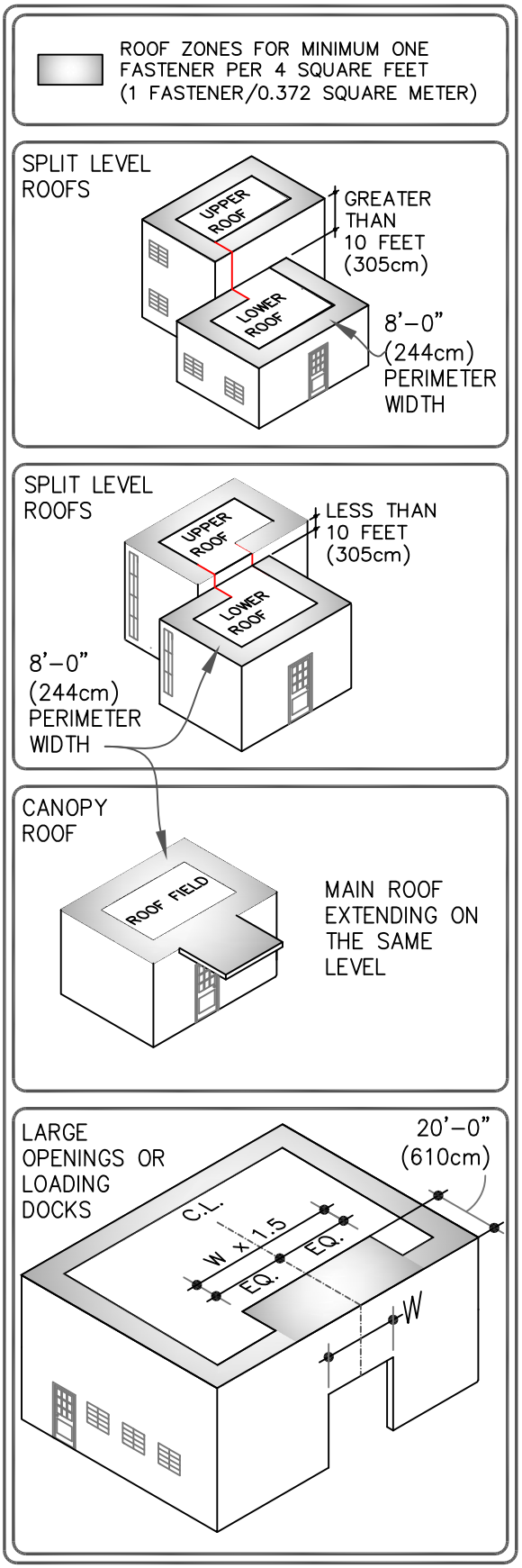

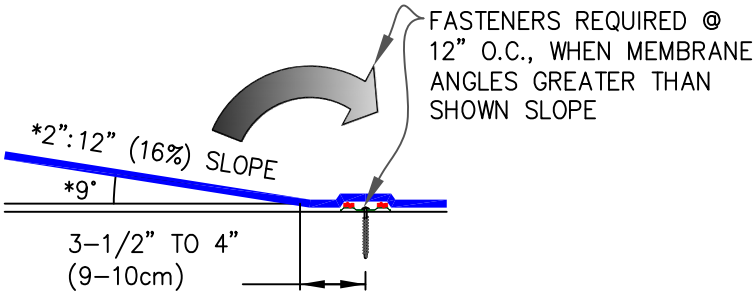

*100mm HORIZONTAL:16mm VERTICAL

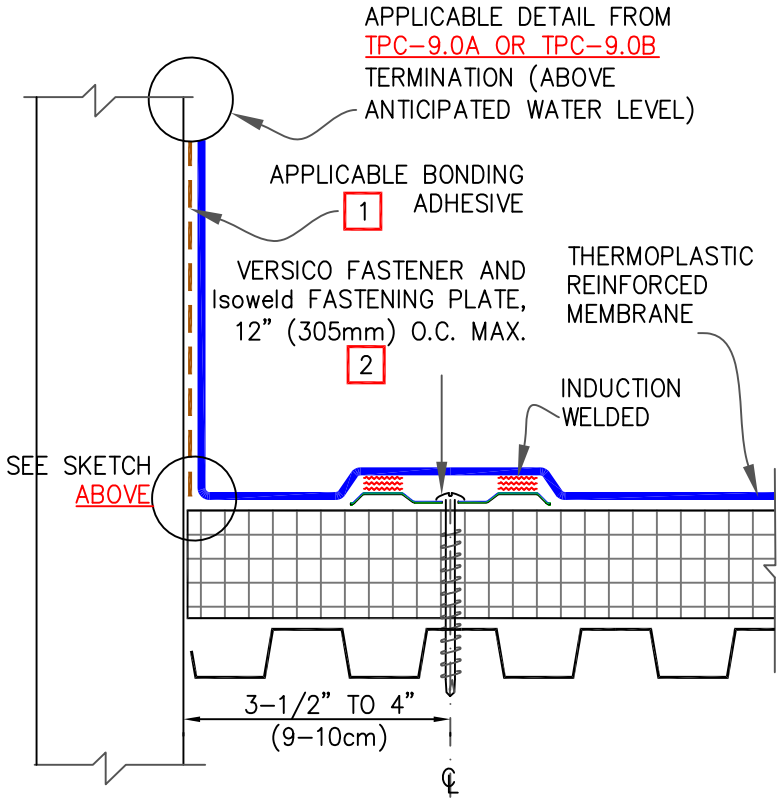

ANGLE CHANGE SECUREMENT

NOTES:

1. VersiWELD MEMBRANE REQUIRES VersiWELD BONDING ADHESIVE AND VersiFLEX MEMBRANE REQUIRES VersiFLEX BONDING ADHESIVE.

2. HPVX FASTENERS AND Isoweld PLATES ARE REQUIRED OVER STEEL AND WOOD DECKS. FOR WARRANTY WIND SPEEDS GREATER THAN 72 MPH PLEASE CONTACT VERSICO FOR REQUIRED FASTENING ENHANCEMENTS.

©2024 VERSICO

ANGLE CHANGE SECUREMENT METHOD WITH ISOWELD PLATES

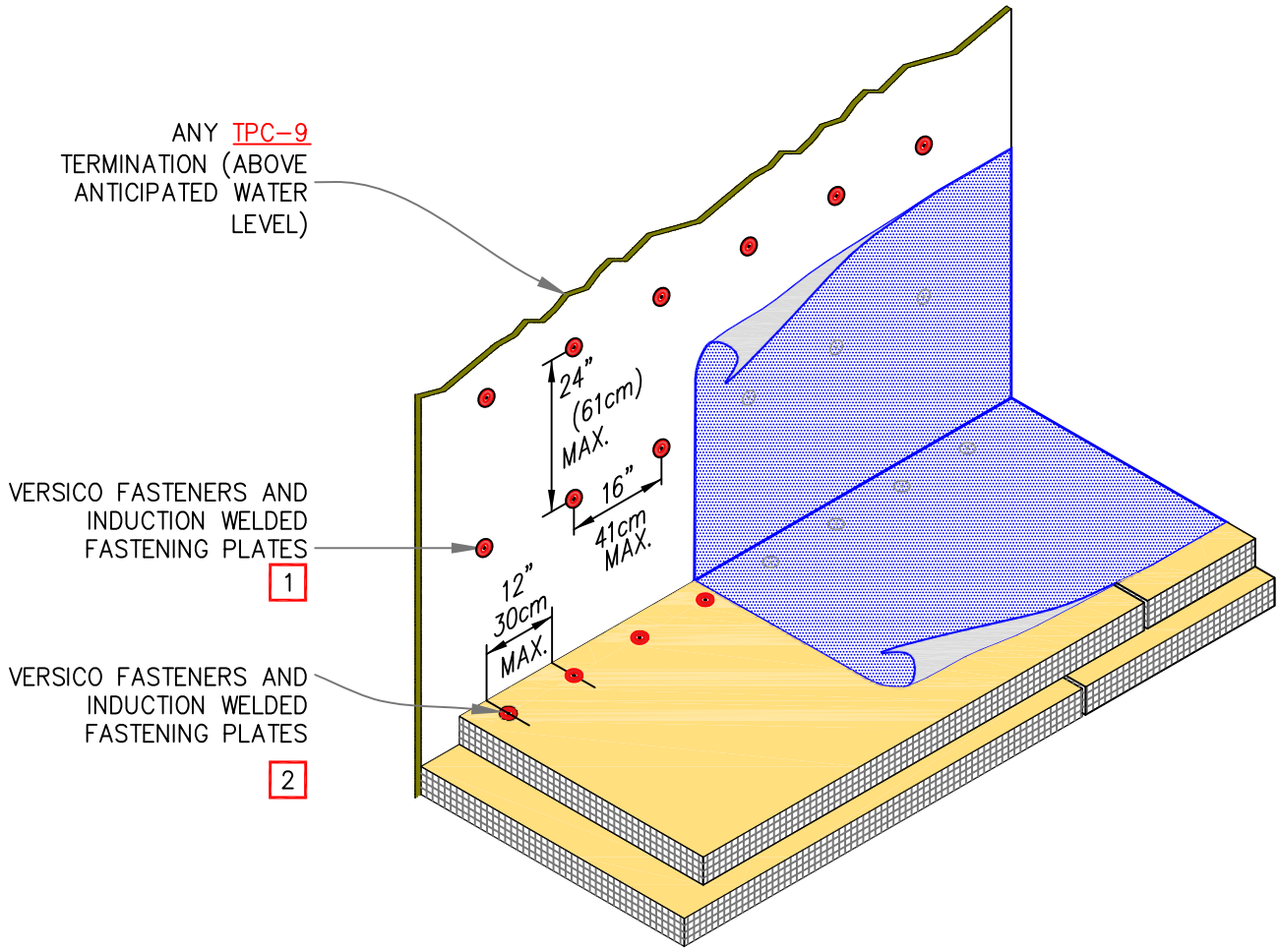

NOTES:

1. FASTENERS MUST PENETRATE INTO WOOD OR METAL STUDS, WHERE WALL IS BUILT WITH STUDS.

2. HPVX FASTENERS ARE REQUIRED OVER STEEL AND WOOD DECKS.

©2024 VERSICO

ISOWELD – WALL ATTACHMENT

VERSICO Isoweld Attachment

IW – 3

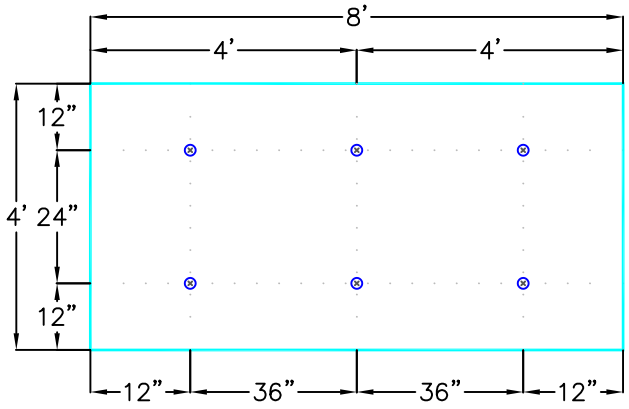

6 FASTENERS PER 4'X8' BOARD

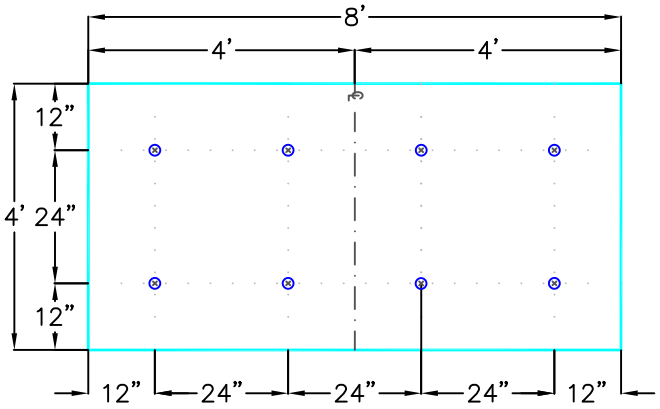

8 FASTENERS PER 4'X8' BOARD

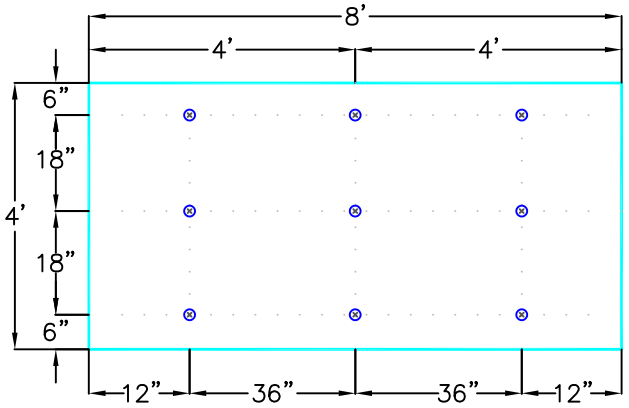

9 FASTENERS PER 4'X8' BOARD

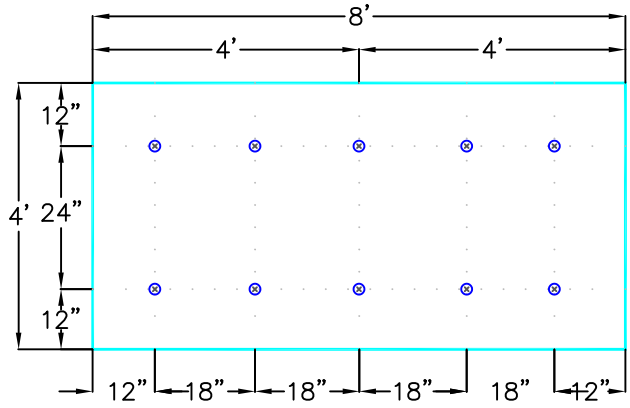

10 FASTENERS PER 4'X8' BOARD

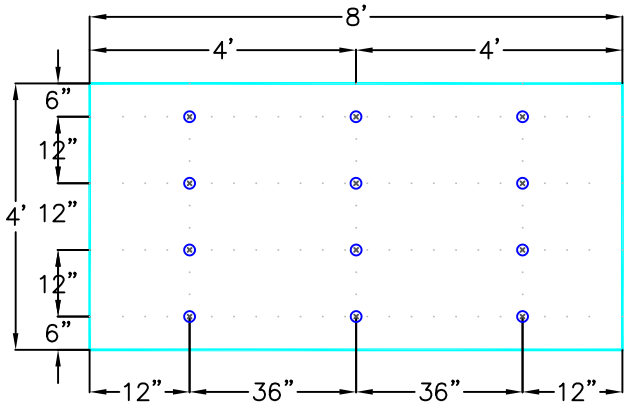

12 FASTENERS PER 4'X8' BOARD

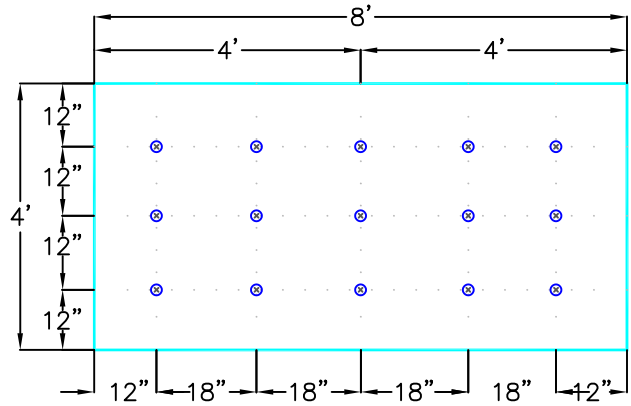

15 FASTENERS PER 4'X8' BOARD

NOTE: FOR FM INSURED PROJECTS, CONSULT FM GLOBAL PRIOR TO INSTALLATION.

VERSICO ROOFING SYSTEMS

©2024 VERSICO

INDUCTION WELDING ATTACHMENT METHOD – FASTENING PATTERNS/ENHANCEMENTS

Induction Welding

FP – 1

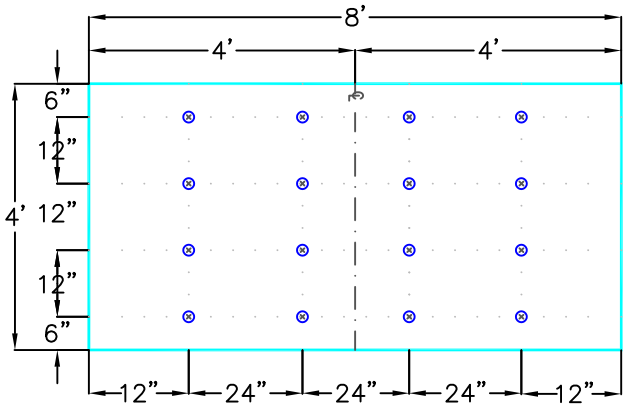

16 FASTENERS PER 4'X8' BOARD

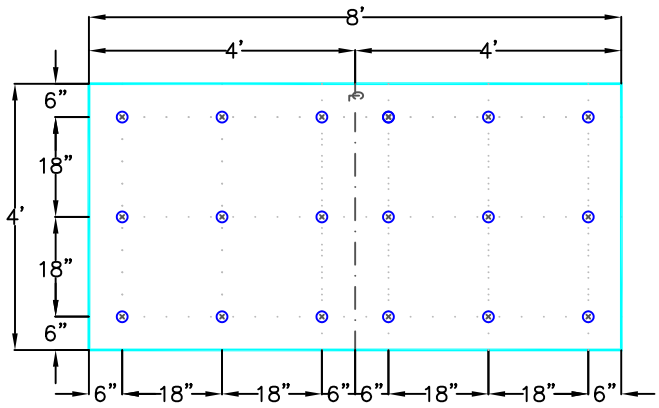

18 FASTENERS PER 4'X8' BOARD

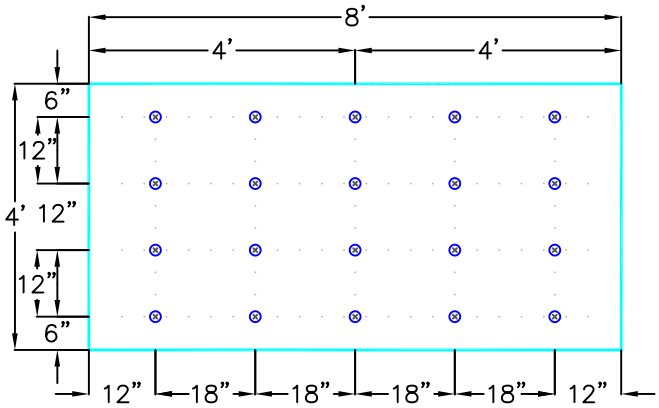

20 FASTENERS PER 4'X8' BOARD

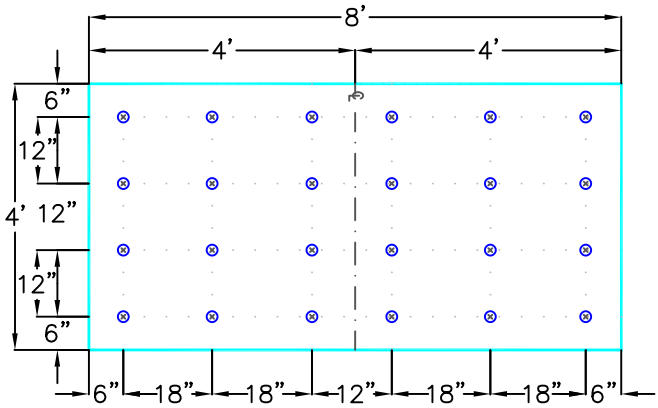

24 FASTENERS PER 4'X8' BOARD

NOTE: FOR FM INSURED PROJECTS, CONSULT FM GLOBAL PRIOR TO INSTALLATION.

VERSICO ROOFING SYSTEMS

©2024 VERSICO

INDUCTION WELDING ATTACHMENT METHOD – FASTENING PATTERNS/ENHANCEMENTS

Induction Welding

FP – 2

SPECIFICATION
ATTACHMENT

TPO Flashing Procedures utilizing VersiGard White EPDM Products

"Attachment II"

January 2024

This is an alternate method for flashing **Versico's VersiWeld (TPO) membrane ONLY** and is intended to be used in conjunction with the Versico's Thermoplastic Specification and Details.

A. Description

VersiWeld TPO flashing procedures utilizing Versico's VersiGard White EPDM flashing products incorporates Peel & Stick Uncured EPDM Flashing (White), White EPDM Peel & Stick Inside/Outside Corners, White EPDM Peel & Stick 'T'-Joint Covers, Peel & Stick White EPDM Pipe Seals, and White EPDM Pourable Sealer Pockets. These Peel & Stick products are used as an option and in lieu of welding TPO Flashing products for a **maximum warranty duration of 20 years**.

Versico's VersiGard White EPDM flashing products are comprised of uncured or cured White EPDM membrane laminated to fully cured synthetic rubber adhesive.

B. Products

Products listed below can be used as part of this alternate flashing method in conjunction with **TPO Primer**.

1. **Peel & Stick Uncured EPDM Flashing (White):** A 6" X 100' and 9" or 12" wide by 50' long, 60-mil thick VersiGard White **uncured** EPDM Flashing laminated to a 30-mil synthetic rubber adhesive used in conjunction with TPO Primer.

   VersiGard White uncured EPDM Flashing is used to flash inside and outside corners, pipes, scuppers and field fabricated pourable sealer pockets when the use of Versico pre-fabricated flashing accessories is not feasible.

2. **White EPDM Peel & Stick Inside/Outside Corners and T-Joint Covers:** A 7" x 9" precut 60-mil thick (white) Uncured EPDM Flashing with a 30-mil synthetic rubber adhesive; used for inside and outside corners, to overlay field splice intersections, and to cover field splices at angle changes.

3. **VersiGard White Quick Applied Cured Cover Strip:** A 6" and 9" widths and 100' long and 12" wide by 50' long VersiGard White 60-mil cured EPDM membrane laminated to a nominal 30-mil cured Quick-Applied Tape. The Cured Cover Strip is for flashing Versico Seam Fastening Plates.

4. **Peel & Stick White EPDM Pipe Seals** with a synthetic rubber adhesive on the deck flange. Pipe Seals are available in one size: 1" to 6".

5. **VersiGard 20" Peel & Stick White EPDM Cured Flashing** - A 20" wide by 50' long VersiGard White cured 60-mil thick EPDM membrane, with Pressure-Sensitive TAPE the full width already applied, used to flash curbs/skylights, etc.

6. **VersiGard Peel & Stick White EPDM Curb Wrap** – A precut 20" wide by 50' long VersiGard White cured 60-mil thick EPDM membrane with 6" wide Peel & Stick White EPDM Seam Tape along one edge to be used to flash curbs, skylights or parapet walls.

7. **White EPDM Pourable Sealer Pocket**: A pre-fabricated Pourable Sealer Pocket which consists of a 2" wide plastic support strip with a synthetic rubber adhesive backed to the EPDM flashing; available in 6" diameter.

8. **Peel & Stick White EPDM Seam Tape:** A 3" or 6" wide by 100' long splice tape used to bond VersiGard White EPDM or VersiWeld TPO membrane to VersiWeld TPO membrane when flashing a curb or a wall with a separate section of membrane.

C. VersiGard White EPDM Flashing Installation Criteria

General

1. When using VersiGard White Peel & Stick EPDM products on TPO membrane, TPO primer should be used to prepare the TPO membrane surface.

2. VersiGard Peel & Stick White EPDM Seam Tape is not to be used for field membrane seaming.

3. **Peel & Stick Uncured EPDM Flashing (White)** must be limited to the overlayment of vertical seams (as required at angle changes), or to flash inside/outside corners, vent pipes, scuppers and other unusually shaped penetrations where the use of Pre-molded Pipe Seals is not practical.

   Note: Even when working in warmer temperatures, in most cases a heat gun will be required to elevate the temperature of Peel & Stick Uncured EPDM Flashing between 105°F and 110°F (40°C and 43°C) to permit proper forming of the uncured flashing.

4. **Inside/Outside Corners and 'T'-Joint Covers**

   a. White EPDM Peel & Stick Inside/Outside Corners and 'T'-Joint Covers are installed on both inside and outside corners in conjunction with TPO Primer.

   b. T-Joint Covers are installed at field splice intersections or at horizontal to vertical transitions of field splices in conjunction with TPO Primer.

5. **Other Penetrations**

   a. Flash pipes and round supports with Peel & Stick White EPDM Pipe Seals, when feasible, in accordance with the applicable detail.

   b. Form Field Fabricated Pipe Seals using Peel & Stick Uncured EPDM Flashing (White) around pipes, round supports and structural steel tubing with corner radius greater than 1/4".

   c. When flashing seamless metal posts, maximum 4" by 4", with a corner radius less than 1/4", apply a field fabricated pipe flashing with a double vertical wrapping.

   d. For pipe clusters or unusually shaped penetrations, a pourable sealer pocket must be utilized.

D. Associated Installation Details

Versico Drip Edge Fascia with VersiGard White EPDM TPC-1.1T
Curb/Wall with VersiGard White EPDM and VersiGard White Peel & Stick Seam Tape TPC-5.1T
Curb with VersiGard White Peel & Stick EPDM Curb Wrap Flashing TPC-5.2T
Pipe: Pre-Molded Peel & Stick VersiGard White EPDM Pipe Seal TPC-8.1T
Field Fabricated Pipe Seal TPC-8.2T
Hot Stack: Field Fabricated Flashing with VersiGard White Uncured EPDM TPC-8.4T
Parapet with VersiGard White EPDM and VersiGard White Peel & Stick Seam Tape TPC-12.1T
VersiGard White Peel & Stick Inside Corner with Continuous TPO Wall Flashing TPC-15.3T
Outside Corner with Pre-Cut Peel & Stick Flashing (Option 1) TPC-15.5T
Outside Corner with Peel & Stick EPDM Flashing (Option 2) TPC-15.7T
Peel & Stick Pourable Sealer Pocket TPC-16.2T
Scupper with EPDM Flashing TPC-18.2T
Scupper with EPDM Flashing (30 Year) Page 1 of 2 ..... TPC-18.3T
Scupper with EPDM Flashing (30 Year) Page 2 of 2 ..... TPC-18.3T

End of Section

CAUTION

DETAIL NOT FOR USE ON 25 OR 30–YEAR WARRANTY PROJECTS. ACCEPTABLE EDGING SHALL CONFORM WITH TPO UNIVERSAL DETAILS TPC–1.2, 1.3, 1.4, 1.5 OR 1.6

TPO WITH EPDM FLASHING

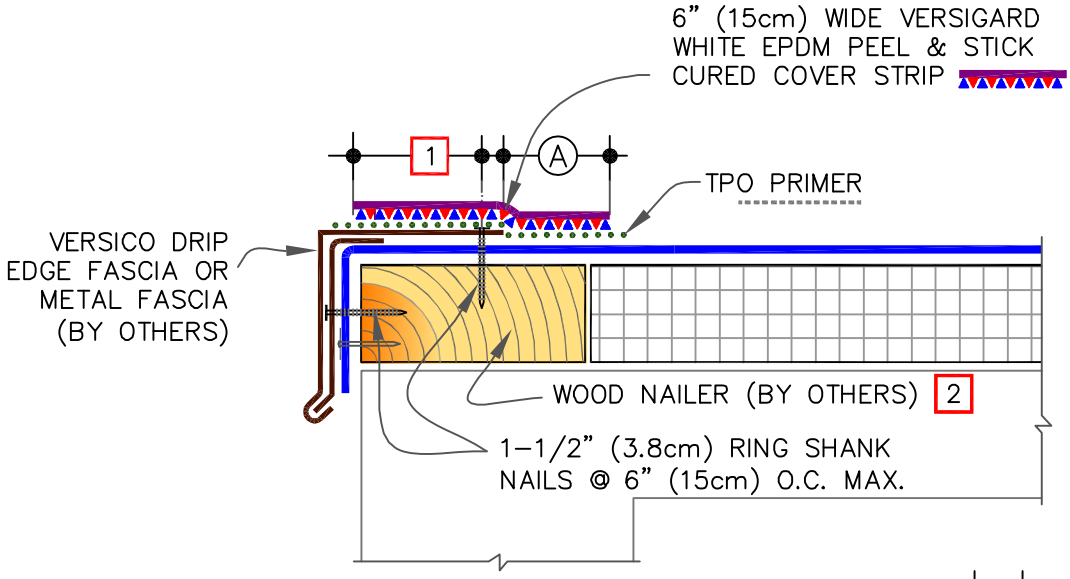

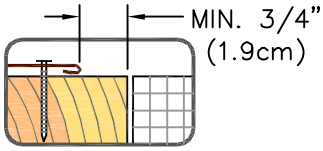

DIMENSIONS		cm	
A	2"	5	MIN.
B	1/2 – 1"	1.5–2.5	

NOTES:

1. METAL FASCIA DECK FLANGE MUST BE TOTALLY COVERED BY VERSIGARD WHITE PEEL & STICK COVER STRIP WITH MINIMUM 2" (5cm) COVERAGE PAST NAIL HEADS.
2. TO REMOVE FINISHING OILS, SCRUB METAL FLANGE WITH WEATHERED MEMBRANE CLEANER; ALLOW TO DRY PRIOR TO APPLYING TPO PRIMER.
3. APPLY TPO PRIMER TO METAL FLANGE AND TPO MEMBRANE SURFACE PRIOR TO INSTALLING VERSIGARD WHITE EPDM PEEL & STICK CURED COVER STRIP.
4. WHEN METAL FASCIA BY OTHERS IS USED, FASTENER TYPE AND FASTENING FREQUENCY SHALL BE RECOMMENDED BY METAL EDGE MANUFACTURER.
5. T–JOINT COVERS ARE REQUIRED AT INTERSECTIONS WITH 60 MIL (1.52mm) OR 80 MIL (2.03mm) MEMBRANE.
6. THIS DETAIL IS NOT RECOMMENDED FOR ROOFS THAT ARE LIKELY TO EXPERIENCE SIGNIFICANT SNOW AND ICE UP–SLOPE FROM THE GUTTER /EDGE. REFER TO DETAILS TPC–1.2 OR TPC–1.3.

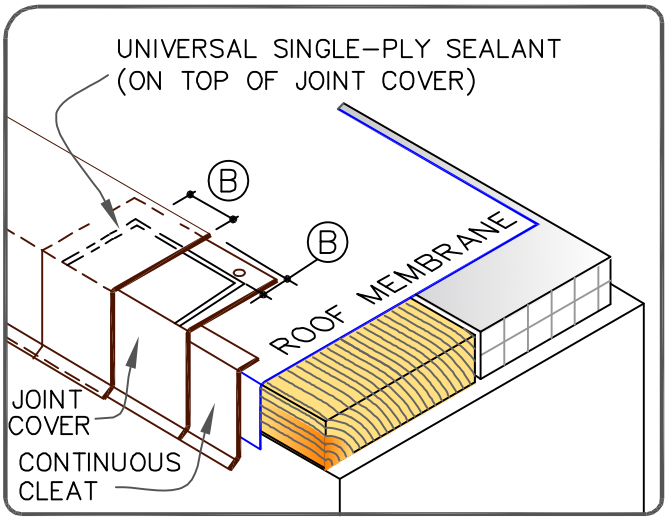

WARRANTY REQUIREMENTS			
	20 YEAR WARRANTY	USE MIN 3" (7.5cm) WIDE PEEL & STICK TAPE OR	MIN 3" (7.5cm) WIDE FIELD-APPLIED VERSIGARD WHITE PEEL & STICK SEAM TAPE
	25 OR 30 YEAR WARRANTY	REFER TO VERSICO TYPICAL TPO DETAIL TPC-2.	

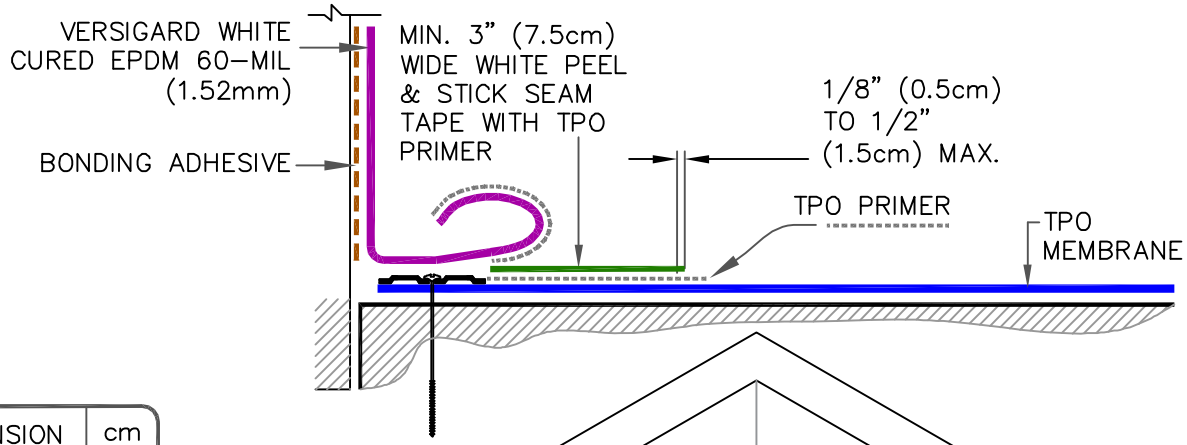

TPO WITH EPDM FLASHING

DIMENSION		cm
A	3"	7.5

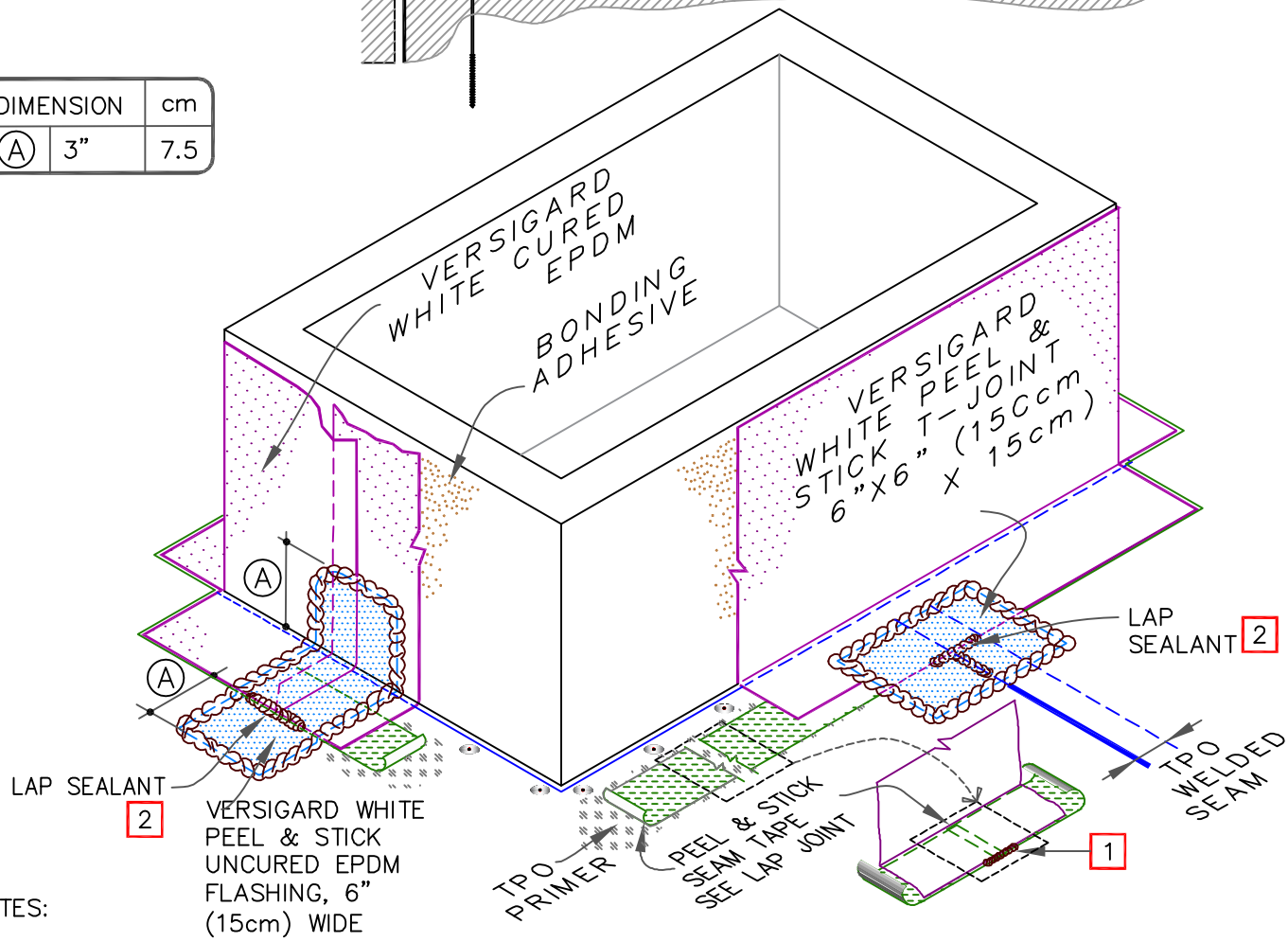

NOTES:

1. FIELD APPLIED VERSIGARD WHITE PEEL & STICK SEAM TAPE IS TO BE OVERLAPPED A MINIMUM OF 1" (2.5cm) AT THE ENDS OF EACH CUT PIECE. APPLY LAP SEALANT AT TAPE OVERLAPS 2" (5cm) IN BOTH DIRECTIONS.
2. APPLY VERSICO WHITE LAP SEALANT ALONG THE LEADING EDGE OF THE MEMBRANE SPLICE UNDER THE T-JOINT COVER, COVERING THE EXPOSED SPLICE TAPE 1/2" (1.5cm) IN ALL DIRECTIONS FROM THE SPLICE INTERSECTION.
3. INSTALL OUTSIDE CORNERS PER DETAIL VGC-15.7 OR VGC-15.5.

VERSICO ROOFING SYSTEMS
© 2024 VERSICO

CURB/WALL WITH VERSIGARD WHITE VERSIGARD & WHITE PEEL & STICK SEAM TAPE

TPO MEMBRANE
APPROVED SUBSTRATE
0 → SEE NOTE

PS (PRESSURE SENSITIVE)
P&S (PEEL & STICK)
QA (QUICK APPLIED)

THERMOPLASTIC ROOFING SYSTEM

TPC-5.1T

WARRANTY REQUIREMENTS		
	20 YEAR WARRANTY	SEE DETAIL BELOW
	25 OR 30 YEAR WARRANTY	REFER TO VERSICO TYPICAL APPLICABLE TPO DETAIL(S) TPC–5.1, TPC–5.2 & TPC–5.3 FOR REQUIRED CURB DETAIL

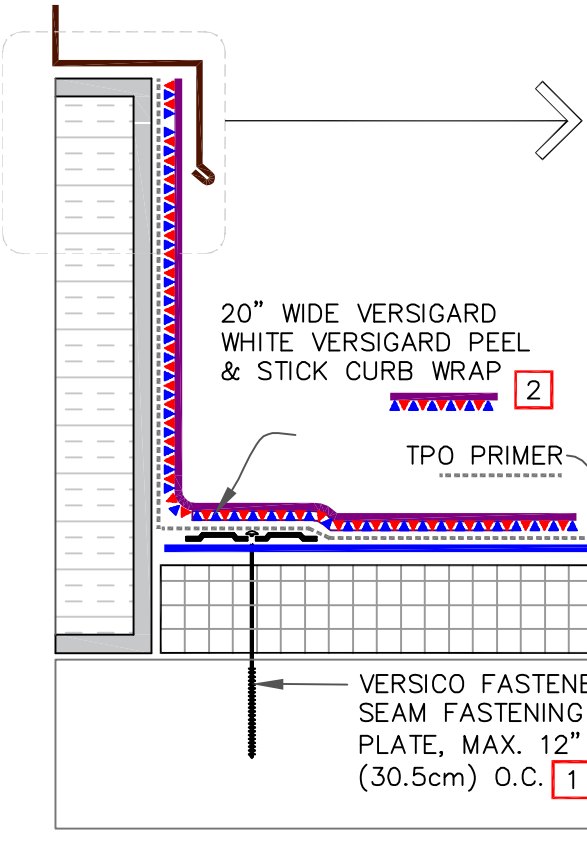

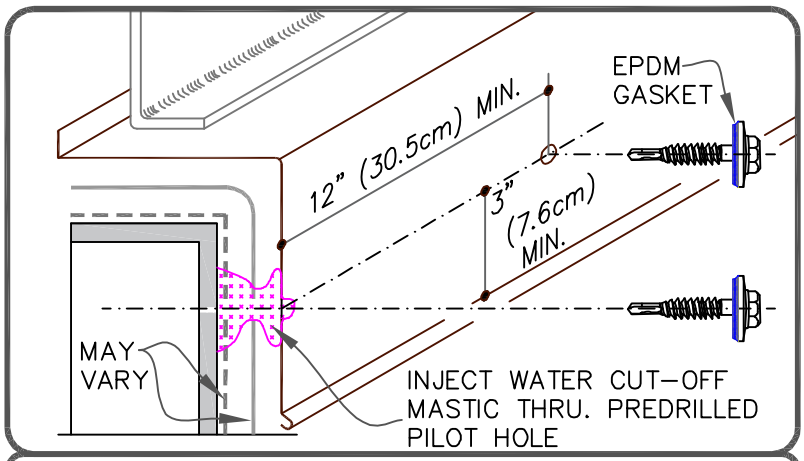

COUNTER FLASHING WITH WATERPROOF JOINERY & ATTACHMENT (BY OTHERS)

TPO WITH EPDM FLASHING

NOTES:

1. SEAM FASTENING PLATES/FASTENERS MAY BE INSTALLED INTO THE VERTICAL SUBSTRATE.
2. IF THE VERTICAL SPLICE ON THE CURB FLASHING IS NOT LOCATED AT THE CORNER, A 6" (15cm) WIDE PRESSURE–SENSITIVE UNCURED OR T–JOINT FLASHING, IN CONJUNCTION WITH TPO PRIMER MUST BE CENTERED OVER FIELD SPLICE AT ANGLE CHANGE.

FASTENER & PRESSURE PLATE TYPES FOR DIFFERENT ROOF DECKS

DECK TYPE	OPTION	FASTENER	PLATE
STEEL OR WOOD	A	HPVX	HPVX
	B	HPV–XL	HPV–XL
STRUCTURAL CONCRETE	A	CD–10	HPVX
	B	MP 14–10	HPVX

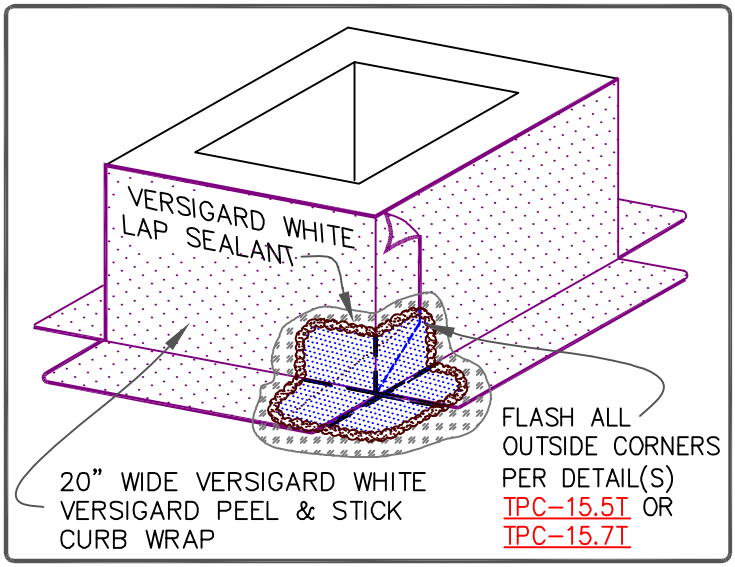

VERSICO ROOFING SYSTEMS
© 2024 VERSICO

CURB WITH VERSIGARD WHITE PEEL & STICK EPDM CURB WRAP FLASHING

FOR WARRANTY, SEE TABLE ON TOP OF PAGE.

TPO MEMBRANE
APPROVED SUBSTRATE
0 SEE NOTE

PS (PRESSURE SENSITIVE)
P&S (PEEL & STICK)
QA (QUICK APPLIED)

THERMOPLASTIC ROOFING SYSTEM

TPC–5.2T

WARRANTY REQUIREMENTS		
	20 YEAR WARRANTY	SEE DETAIL BELOW
	25 OR 30 YEAR WARRANTY	REFER TO VERSICO TYPICAL TPO DETAIL TPC–8.1. NO FIELD–FABRICATION ALLOWED FOR 25/30 YEAR ROOF.

DIMENSIONS		cm	
A	1/2"	1.5	TO
	6"	15	
B	3"	7.5	

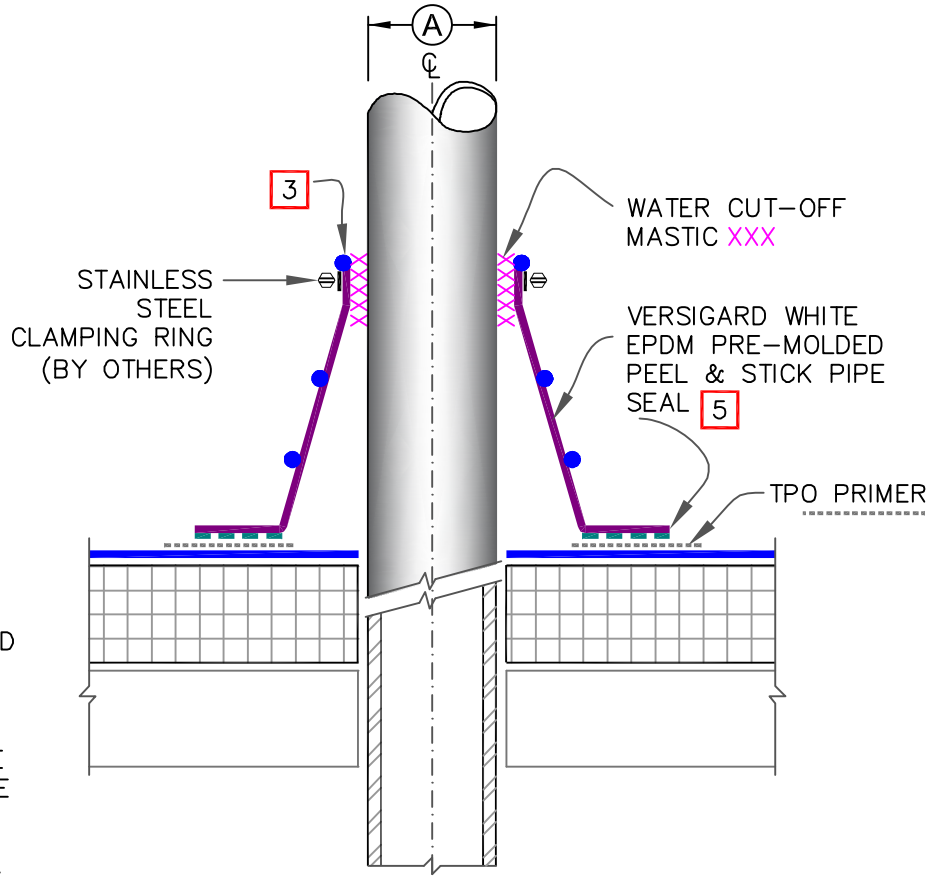

TPO WITH EPDM FLASHING

NOTES:

1. REMOVE ALL LEAD AND OTHER FLASHING BEFORE INSTALLING PEEL & STICK PIPE SEAL.
2. TEMPERATURE OF THE PIPE PENETRATION MUST NOT EXCEED 180°F (82°C).
3. PRE–MOLDED PIPE FLASHING MUST HAVE INTACT RIB AT THE TOP EDGE REGARDLESS OF PIPE DIAMETER.
4. DECK FLANGES OF THE PEEL & STICK PIPE SEAL SHALL NOT BE OVERLAPPED, CUT OR APPLIED OVER ANY ANGLE CHANGE.
5. WHEN A FIELD SPLICE INTERSECTS A PIPE SEAL, APPLY VERSIGARD WHITE LAP SEALANT ALONG THE EDGE OF THE MEMBRANE SPLICE COVERING THE EXPOSED SPLICE TAPE 1/2" (1.5cm) IN EACH DIRECTION FROM THE SPLICE INTERSECTION & OVERLAY WITH A 7"X9" (18cm X 23cm) T–JOINT COVER.
6. ON MECHANICALLY–ATTACHED ROOFING SYSTEMS, ADDITIONAL MEMBRANE SECUREMENT IS REQUIRED. REFER TO TPO DETAIL TPC–8.1

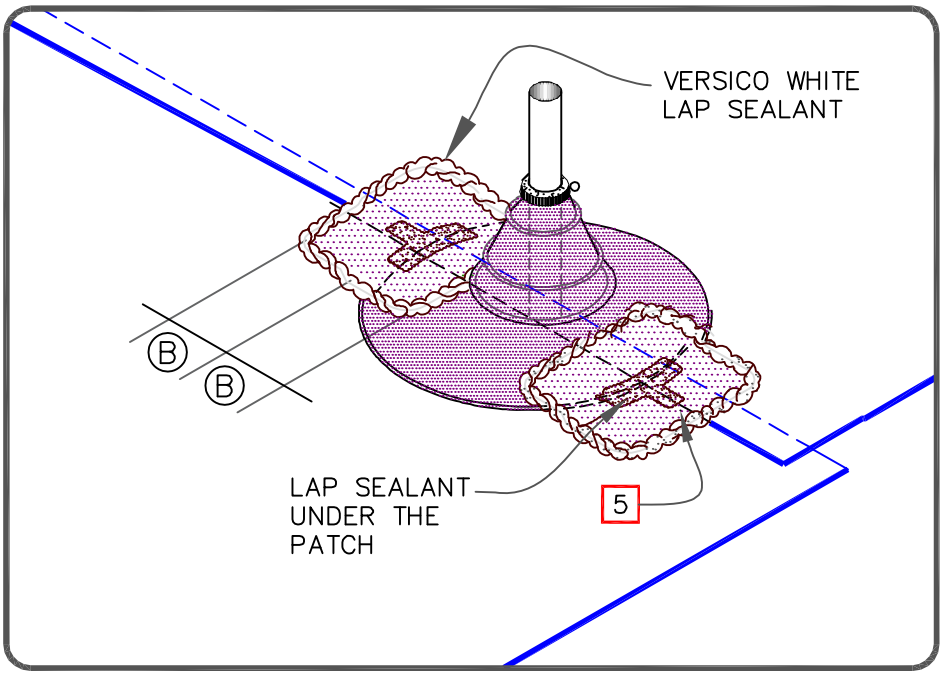

VERSICO ROOFING SYSTEMS
© 2024 VERSICO

PIPE: PRE–MOLDED PEEL & STICK VERSIGARD WHITE PIPE SEAL

FOR WARRANTY, SEE TABLE ON TOP OF PAGE.

TPO MEMBRANE
APPROVED SUBSTRATE
0 → SEE NOTE

PS (PRESSURE SENSITIVE)
P&S (PEEL & STICK)
QA (QUICK APPLIED)

THERMOPLASTIC ROOFING SYSTEM

TPC–8.1T

WARRANTY REQUIREMENTS	20 YEAR WARRANTY	SEE DETAIL BELOW
	25 OR 30 YEAR WARRANTY	USE ONLY TPO PREFABRICATED ACCESSORIES

TPO WITH EPDM FLASHING

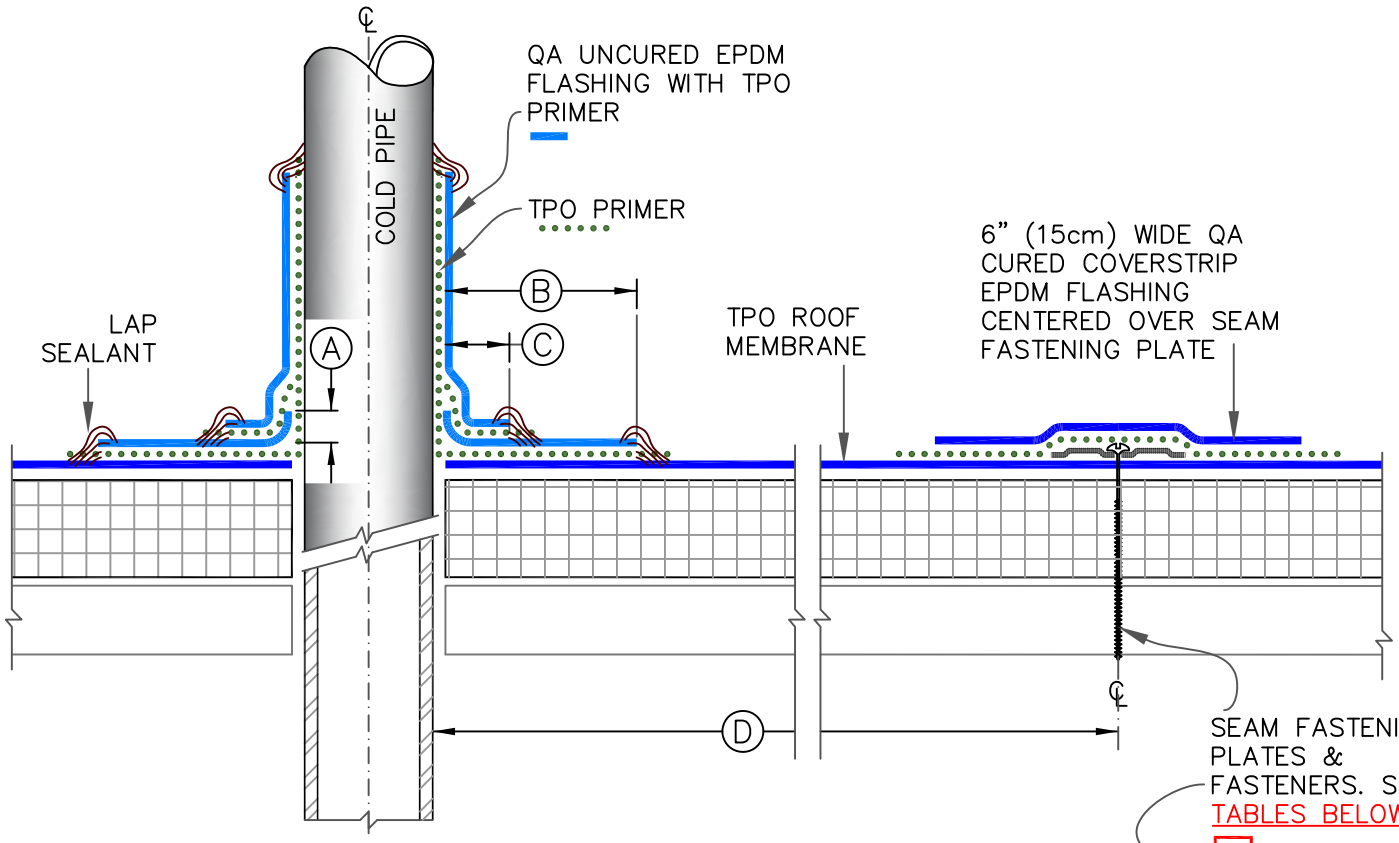

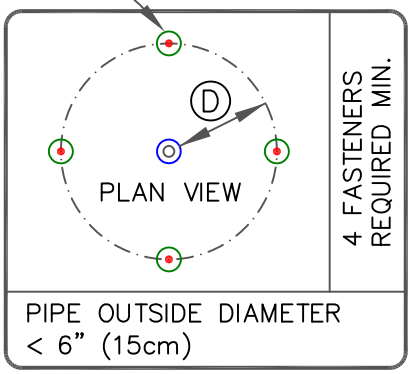

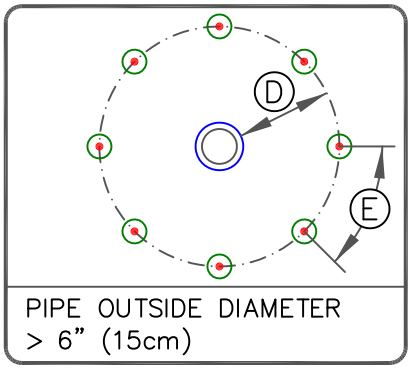

NOTES:

1. REMOVE ALL LEAD AND OTHER FLASHING BEFORE INSTALLING PRESSURE-SENSITIVE ELASTOFORM FLASHING.
2. TEMPERATURE OF THE PIPE PENETRATION MUST NOT EXCEED 180°F (82°C).
3. FASTENERS/PLATES ARE NOT REQUIRED ON ADHERED SYSTEMS UNLESS PIPE DIAMETER EXCEEDS 18" (50cm).
4. IN COLDER TEMPERATURES, A HEAT GUN MUST BE USED WHEN FORMING QA UNCURED EPDM FLASHING.

DIMENSIONS		cm	
A	1/2"	1.5	
B	3"	7.5	
C	1"	2.5	
D	6"	15	TO
	12"	30	
E	12"	30	MAX.

FASTENER & PRESSURE PLATE TYPES FOR DIFFERENT ROOF DECKS

DECK TYPE	OPTION	FASTENER	PLATE
STEEL OR WOOD	A	HPVX	HPVX
	B	HPV-XL	HPV-XL
STRUCTURAL CONCRETE	A	CD-10	HPVX
	B	MP 14-10	HPVX

VERSICO ROOFING SYSTEMS
© 2024 VERSICO

FIELD-FABRICATED PIPE SEAL WITH EPDM FLASHING

SEE WARRANTY REQUIREMENTS.

TPO MEMBRANE
APPROVED SUBSTRATE
0 → SEE NOTE

PS (PRESSURE SENSITIVE)
P&S (PEEL & STICK)
QA (QUICK APPLIED)

THERMOPLASTIC ROOFING SYSTEM

TPC-8.2T

WARRANTY REQUIREMENTS	20 YEAR WARRANTY	SEE DETAIL BELOW
	25 OR 30 YEAR WARRANTY	REFER TO VERSICO TPO DETAIL TPC 8.6.

TPO WITH EPDM FLASHING

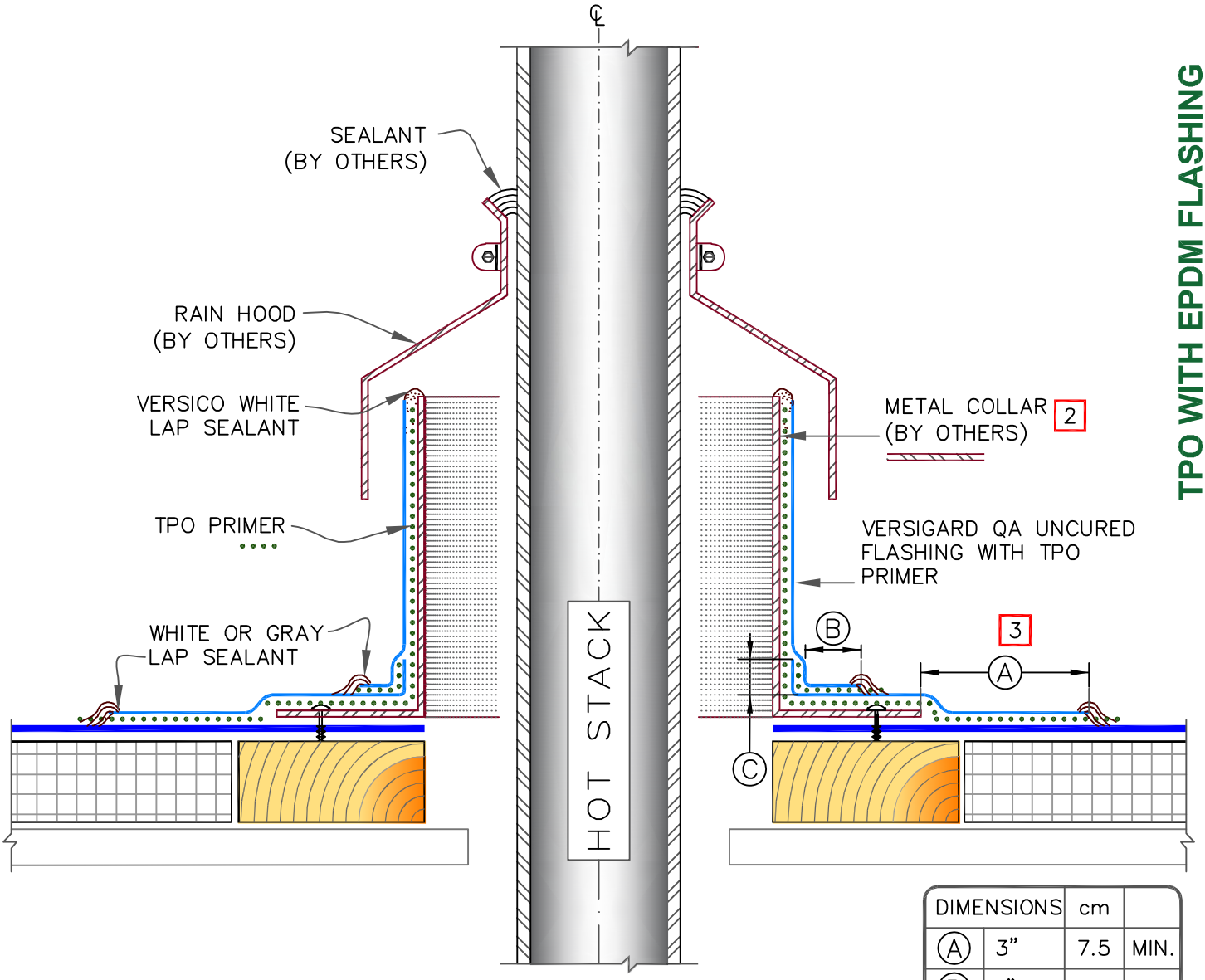

DIMENSIONS		cm	
A	3"	7.5	MIN.
B	1"	2.5	MIN.
C	1/2"	1.5	MIN.

NOTES:

1. REMOVE ALL LEAD AND OTHER FLASHING BEFORE INSTALLING FIELD FABRICATED PIPE SEAL.
2. TEMPERATURE OF METAL COLLAR MUST NOT EXCEED 180°F (82°C).
3. TPO PRIMER MUST BE APPLIED TO THE MATING SURFACES PRIOR TO APPLYING VERSIGARD PEEL & STICK UNCURED FLASHING.
4. IN COLDER TEMPERATURES, A HEAT GUN MUST BE USED WHEN FORMING PEEL & STICK UNCURED FLASHING.

VERSICO ROOFING SYSTEMS
© 2024 VERSICO

HOT STACK: FIELD FABRICATED FLASHING WITH VERSIGARD UNCURED EPDM

WARRANTY: SEE TABLE ON TOP OF PAGE

TPO MEMBRANE
APPROVED SUBSTRATE
0 → SEE NOTE

PS (PRESSURE SENSITIVE)
P&S (PEEL & STICK)
QA (QUICK APPLIED)

THERMOPLASTIC ROOFING SYSTEM

TPC-8.4T

WARRANTY REQUIREMENTS	DETAIL NOT FOR USE ON 25–30 YEAR WARRANTY ROOFS. SEE DETAIL TPC–12.1
	FASTENERS AND PLATES ARE REQUIRED AT 6" (15cm) O.C. FOR ADHERED SYSTEMS WITH WARRANTY WIND SPEED COVERAGE GREATER THAN 90 MPH AND FOR ALL PROJECTS WITH WARRANTIES GREATER THAN 20 YEARS.

TPO WITH EPDM FLASHING

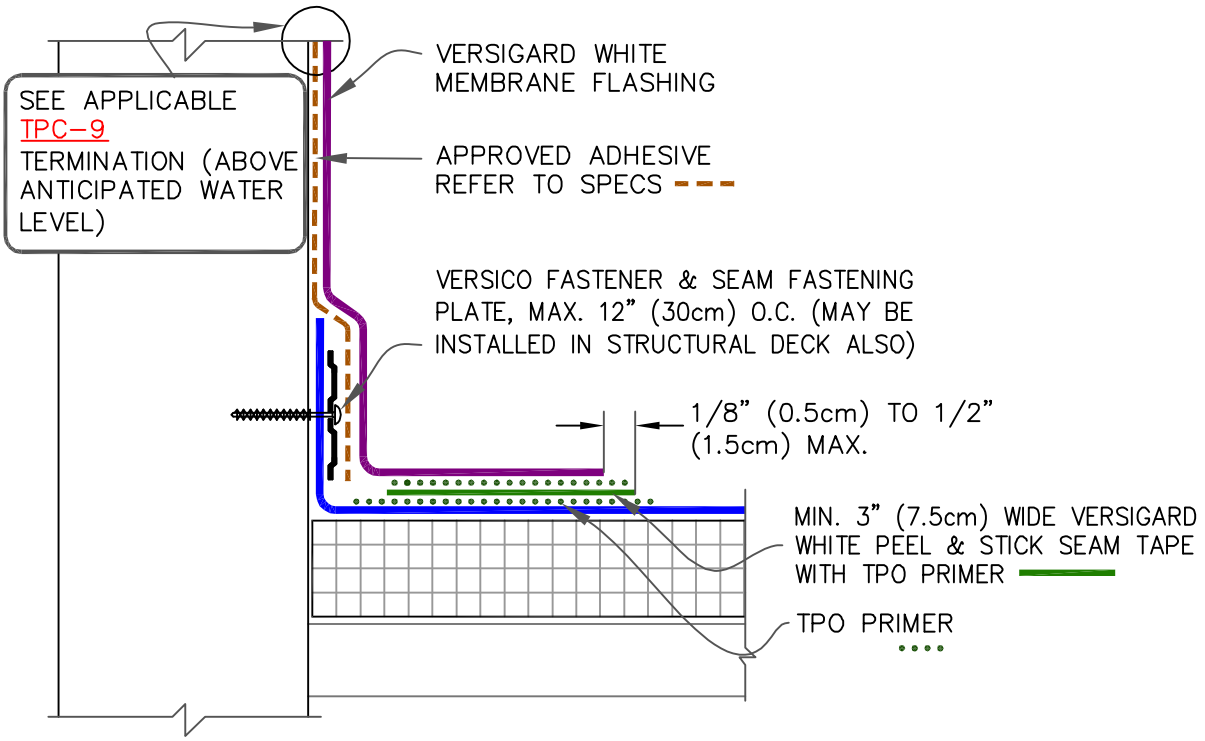

DIMENSION		cm
A	3"	7.5

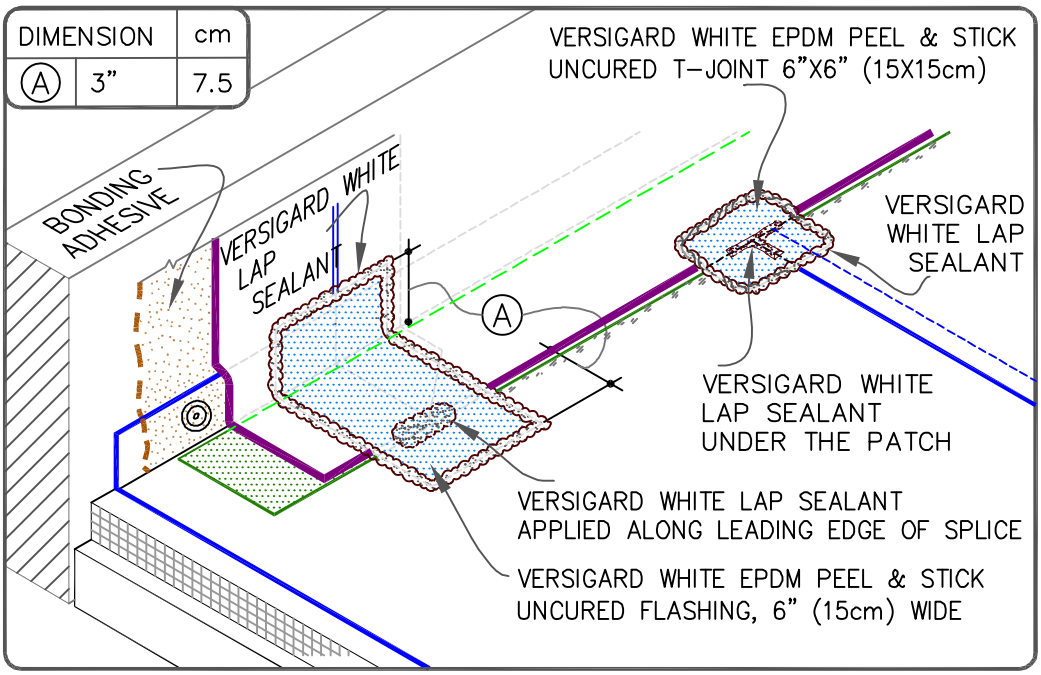

VERSICO ROOFING SYSTEMS
© 2024 VERSICO

PARAPET/CURB WITH VERSIGARD WHITE EPDM PEEL & STICK SEAM TAPE

WARRANTY: SEE TABLE ON TOP OF PAGE.

TPO MEMBRANE
APPROVED SUBSTRATE
0 → SEE NOTE

PS (PRESSURE SENSITIVE)
P&S (PEEL & STICK)
QA (QUICK APPLIED)

THERMOPLASTIC ROOFING SYSTEM

TPC–12.1T

TPO WITH EPDM FLASHING

1

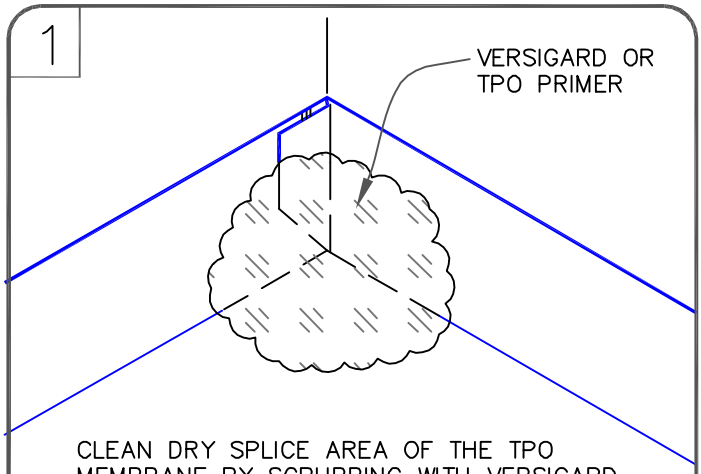

CLEAN DRY SPLICE AREA OF THE TPO MEMBRANE BY SCRUBBING WITH VERSIGARD OR TPO PRIMER.

2

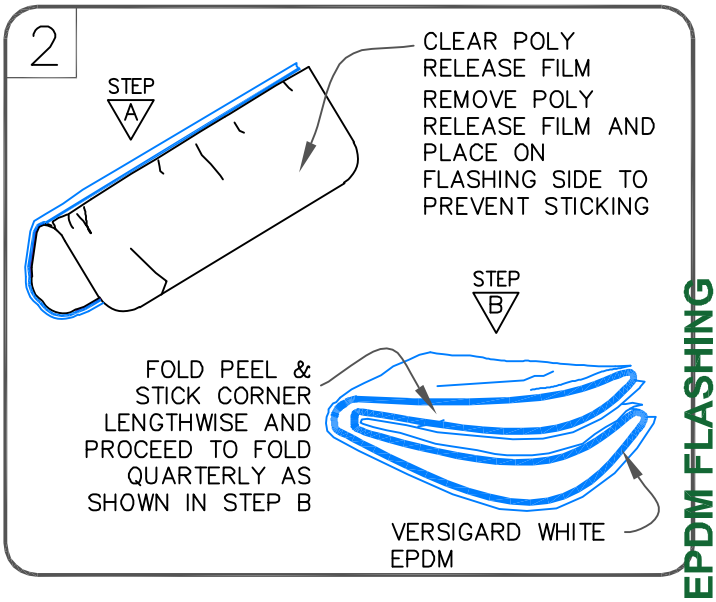

3

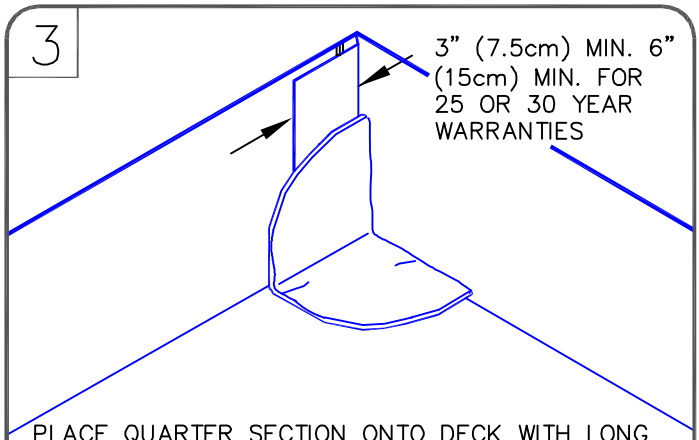

PLACE QUARTER SECTION ONTO DECK WITH LONG FOLDED SIDE FACING THE WALL. REMOVE REMAINING RELEASE PAPER. PRESS FIRMLY AND PROCEED WITH SECOND QUARTER GOING UP THE VERTICAL WALL BY PRESSING FIRMLY INTO CORNER.

4

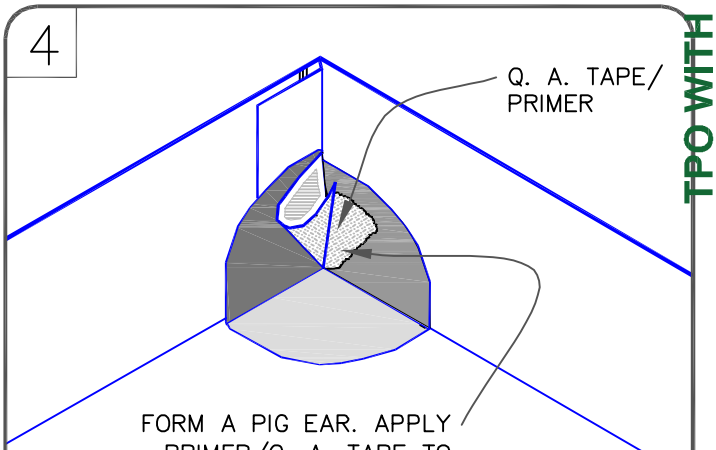

5

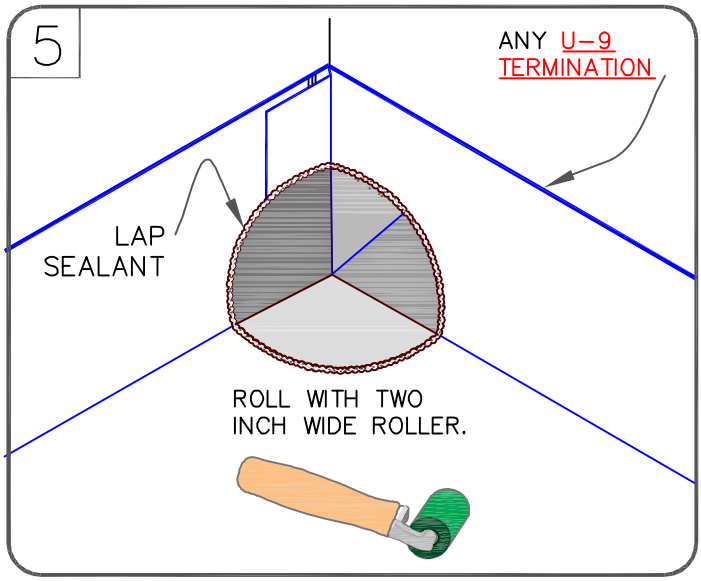

NOTE:

1. TPO PRIMER MUST BE APPLIED TO ALL SPLICE AREAS AND FOR EACH LAYER OF PEEL & STICK FLASHING.

VERSICO ROOFING SYSTEMS

© 2024 VERSICO

VERSIGARD WHITE PEEL & STICK INSIDE CORNER WITH CONTINUOUS TPO WALL FLASHING

MAXIMUM WARRANTY: 20 YEARS

TPO MEMBRANE
APPROVED SUBSTRATE
0 → SEE NOTE

PS (PRESSURE SENSITIVE)
P&S (PEEL & STICK)
QA (QUICK APPLIED)

THERMOPLASTIC ROOFING SYSTEM

TPC-15.3T

TPO WITH EPDM FLASHING

1

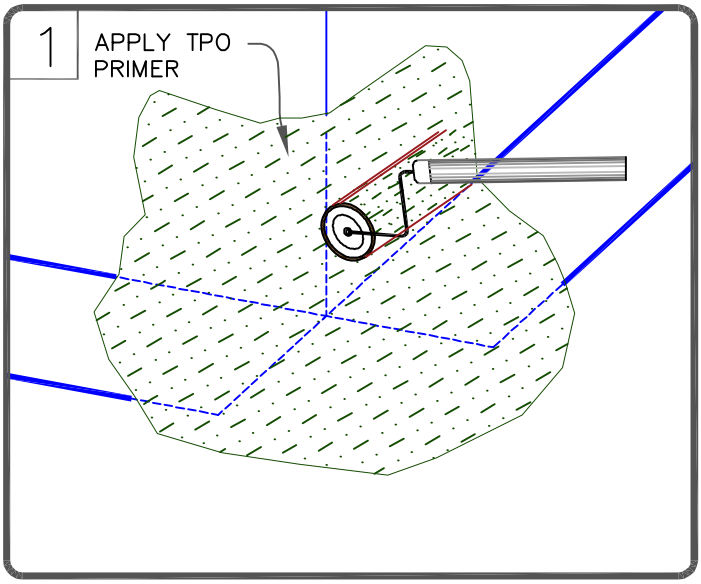

2

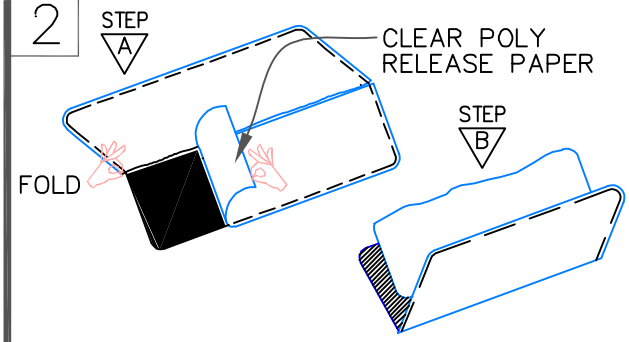

PRIOR TO PLACEMENT OF VERSIGARD WHITE PEEL & STICK VERSIGARD CORNER, PEEL OFF THE POLY RELEASE FILM FROM THE FLASHING SIDE AND HEAT WITH A HEAT GUN. RE-APPLY THE POLY LOOSELY. FOLD THE FLASHING IN HALF.

3

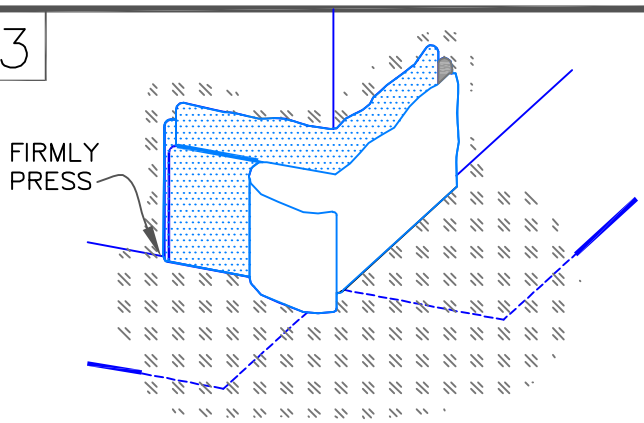

PLACE VERSIGARD WHITE INSIDE/OUTSIDE CORNER AS SHOWN AND REMOVE RELEASE PAPER.

PRESS FOLDED FLASHING TIGHTLY INTO ANGLE CHANGE AND FIRMLY PRESS FLASHING AGAINST THE VERTICAL SURFACE.

4

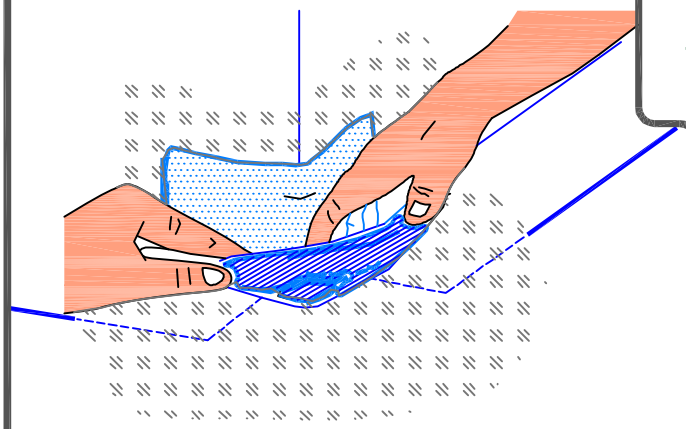

PLACE FOLDED FLASHING TIGHTLY INTO ANGLE CHANGE AND FIRMLY PRESS FLASHING ONTO THE DECK FLANGE BY PRESSING THE FLASHING AGAINST THE HORIZONTAL SURFACE.

5

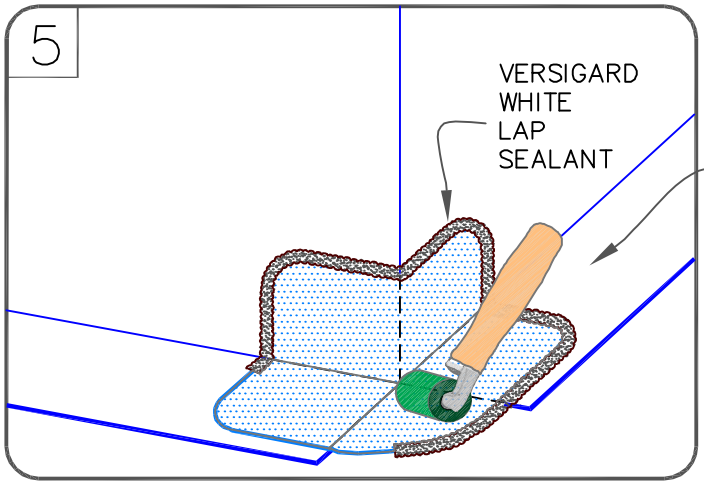

AFTER ADHERING, ROLL WITH A TWO INCH WIDE ROLLER. PAY PARTICULAR ATTENTION TO THE STEP OFFS AND ANGLE CHANGES.

IN COLDER TEMPERATURES, A HEAT GUN MUST BE USED WHEN FORMING PEEL & STICK UNCURED FLASHING.

WARRANTY REQUIREMENTS	DETAIL NOT FOR USE ON 25-30 YEAR WARRANTY ROOFS.

VERSICO ROOFING SYSTEMS

© 2024 VERSICO

OUTSIDE CORNER WITH PRE-CUT PEEL & STICK FLASHING (OPTION 1)

MAXIMUM WARRANTY: 30 YEARS

TPO MEMBRANE
APPROVED SUBSTRATE
0 SEE NOTE

PS (PRESSURE SENSITIVE)
P&S (PEEL & STICK)
QA (QUICK APPLIED)

THERMOPLASTIC ROOFING SYSTEM

TPC-15.5T

TPO WITH EPDM FLASHING

1

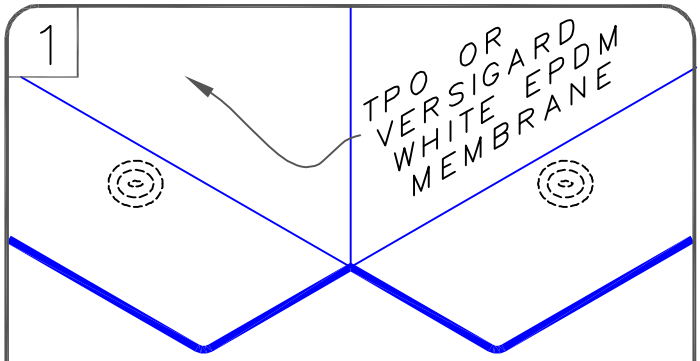

FASTEN MEMBRANE AND FLASH CURB OR WALL WITH MEMBRANE FOLLOWING STANDARD PROCEDURES USING BONDING ADHESIVE AND VERSIGARD WHITE PEEL & STICK TAPE OR HOT AIR WELDING.

2

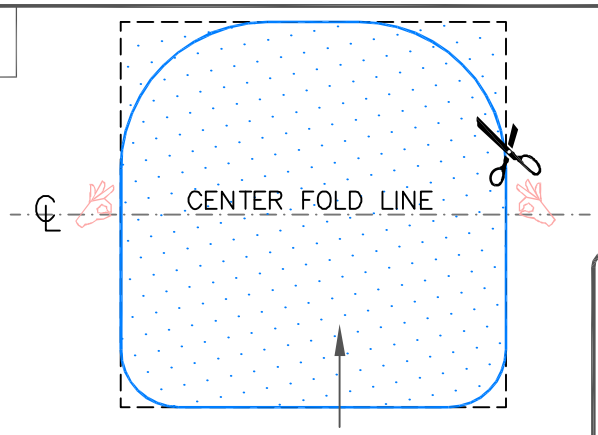

CUT A 9"x9" (23cm x 23cm) SECTION OF VERSIGARD (WHITE OR GRAY) PEEL & STICK UNCURED FLASHING AND MAKE ROUNDED CORNERS AS SHOWN.

3

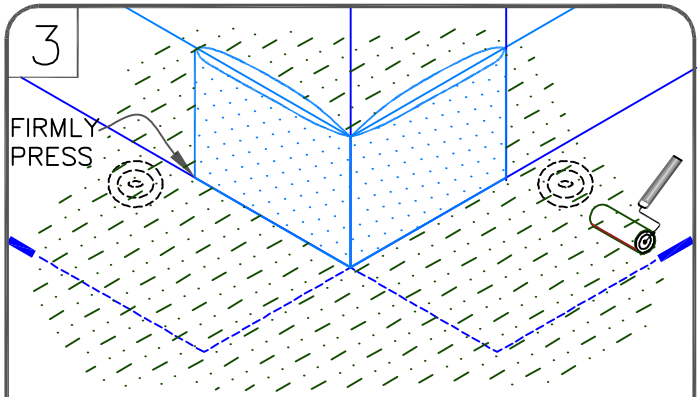

AFTER APPLYING TPO PRIMER, REMOVE AND REPLACE POLY BACKING. ON FLASHING SIDE, FOLD 9"x9" (23cm x 23cm) FLASHING IN HALF WITH ROUNDED PORTION TURNED UP. CENTER FLASHING ON CORNER AND FIRMLY PRESS AGAINST VERTICAL SURFACE.

4

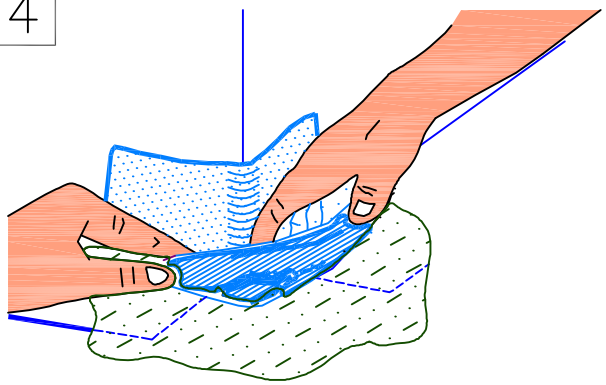

ROLL AND CREASE FLASHING TIGHTLY INTO ANGLE CHANGE AND FIRMLY ROLL FLASHING ONTO THE DECK MEMBRANE.

5

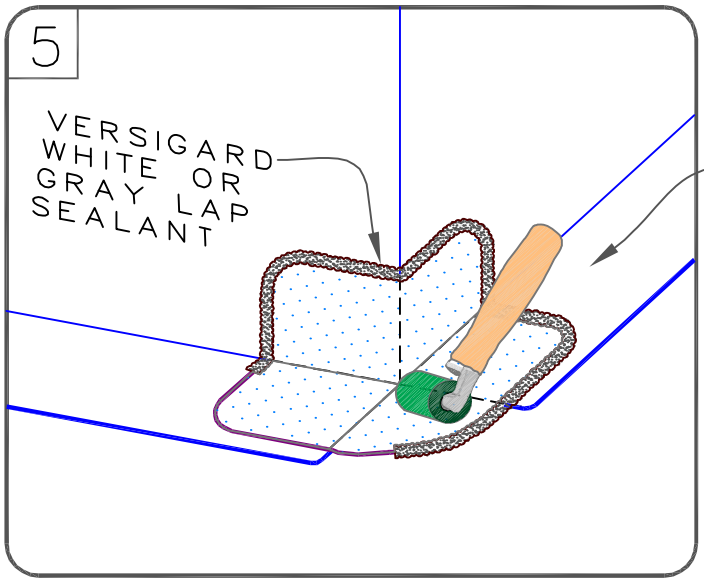

AFTER ADHERING, ROLL WITH A TWO INCH WIDE ROLLER. PAY PARTICULAR ATTENTION TO THE STEP OFFS AND ANGLE CHANGES.

IN COLDER TEMPERATURES, A HEAT GUN MUST BE USED WHEN FORMING PEEL & STICK UNCURED FLASHING.

VERSICO ROOFING SYSTEMS

© 2024 VERSICO

OUTSIDE CORNER WITH PEEL & STICK EPDM FLASHING (OPTION 2)

MAXIMUM WARRANTY: 20 YEARS

TPO MEMBRANE
APPROVED SUBSTRATE
0 → SEE NOTE

PS (PRESSURE SENSITIVE)
P&S (PEEL & STICK)
QA (QUICK APPLIED)

THERMOPLASTIC ROOFING SYSTEM

TPC-15.7T

WARRANTY REQUIREMENTS	DETAIL NOT FOR USE ON 25–30 YEAR WARRANTY ROOFS. SEE TPC 16.1.

TPO WITH EPDM FLASHING

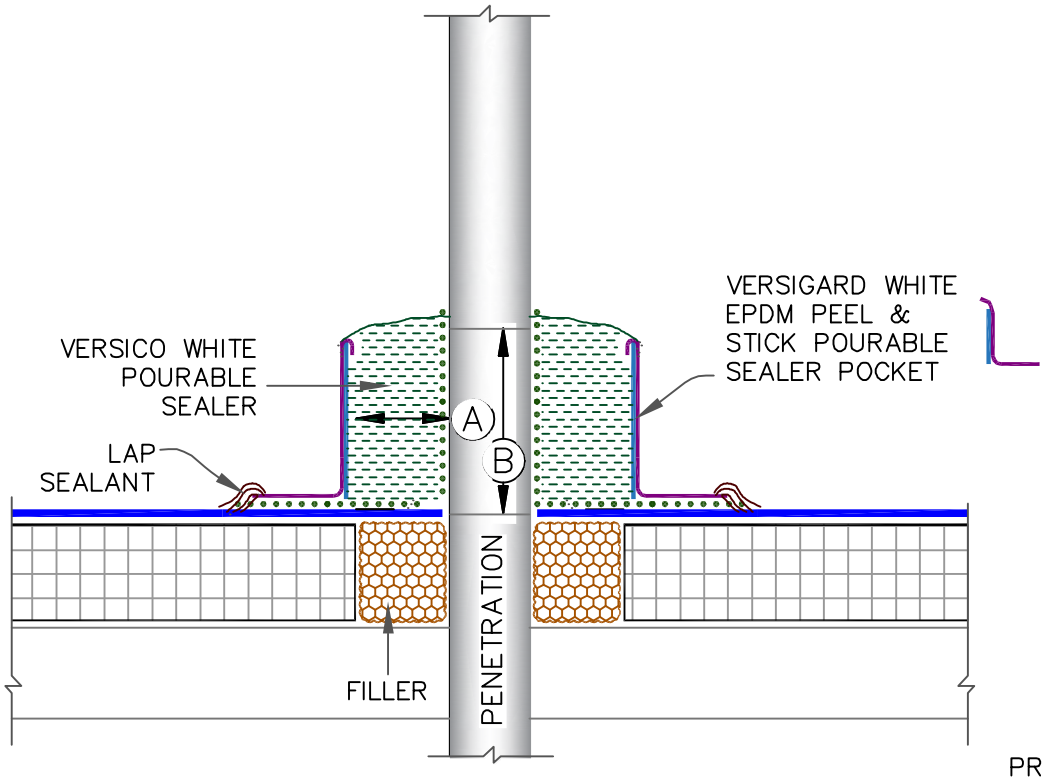

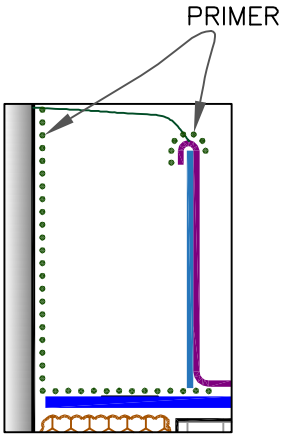

MANDATORY TPO PRIMER AT ALL INTERFACES OF POURABLE SEALER EXCEPT BLUE PLASTIC SUPPORT STRIP ••••

NOTES:

1. THE MAXIMUM ALLOWABLE SURFACE TEMPERATURE OF THE PENETRATION SHALL NOT EXCEED 180°F (82°C).
2. ALL DEBRIS (PAINT, RUST, LEAD, OTHER FLASHINGS, ETC.) MUST BE REMOVED FROM THE PENETRATION.
3. PENETRATIONS, MEMBRANE, FLASHING AND METAL (INSIDE POCKET) MUST BE PRIMED WITH TPO PRIMER PRIOR TO APPLYING POURABLE SEALER. DO NOT PRIME THE BLUE PLASTIC SUPPORT STRIP.
4. POURABLE SEALER MUST COMPLETELY FILL POURABLE SEALER POCKET TO PREVENT PONDING OF WATER.
5. POURABLE SEALER MUST CONTACT PRIMED PEEL & STICK UNCURED FLASHING AND DECK MEMBRANE.
6. SECUREMENT IS REQUIRED FOR POURABLE SEALER POCKETS WHICH ARE GREATER THAN 18" (46cm) IN DIAMETER. REFER TO SPECIFICATIONS.
7. ON MECHANICALLY–ATTACHED ROOFING SYSTEMS, ADDITIONAL MEMBRANE SECUREMENT IS REQUIRED (SIMILAR TO TPC – 8.1) REGARDLESS OF SIZE OR DIAMETER.
8. PIPE CLUSTERS MUST HAVE MINIMUM 1" (2.5cm) CLEARANCE BETWEEN PENETRATIONS.

DIMENSIONS		cm	
A	1"	2.5	MIN.
B	2"	5	MIN.

VERSICO ROOFING SYSTEMS

© 2024 VERSICO

PEEL & STICK POURABLE SEALER POCKET

MAXIMUM WARRANTY: 20 YEARS

TPO MEMBRANE
APPROVED SUBSTRATE
0 SEE NOTE

PS (PRESSURE SENSITIVE)
P&S (PEEL & STICK)
QA (QUICK APPLIED)

THERMOPLASTIC ROOFING SYSTEM

TPC–16.2T

TPO WITH EPDM FLASHING

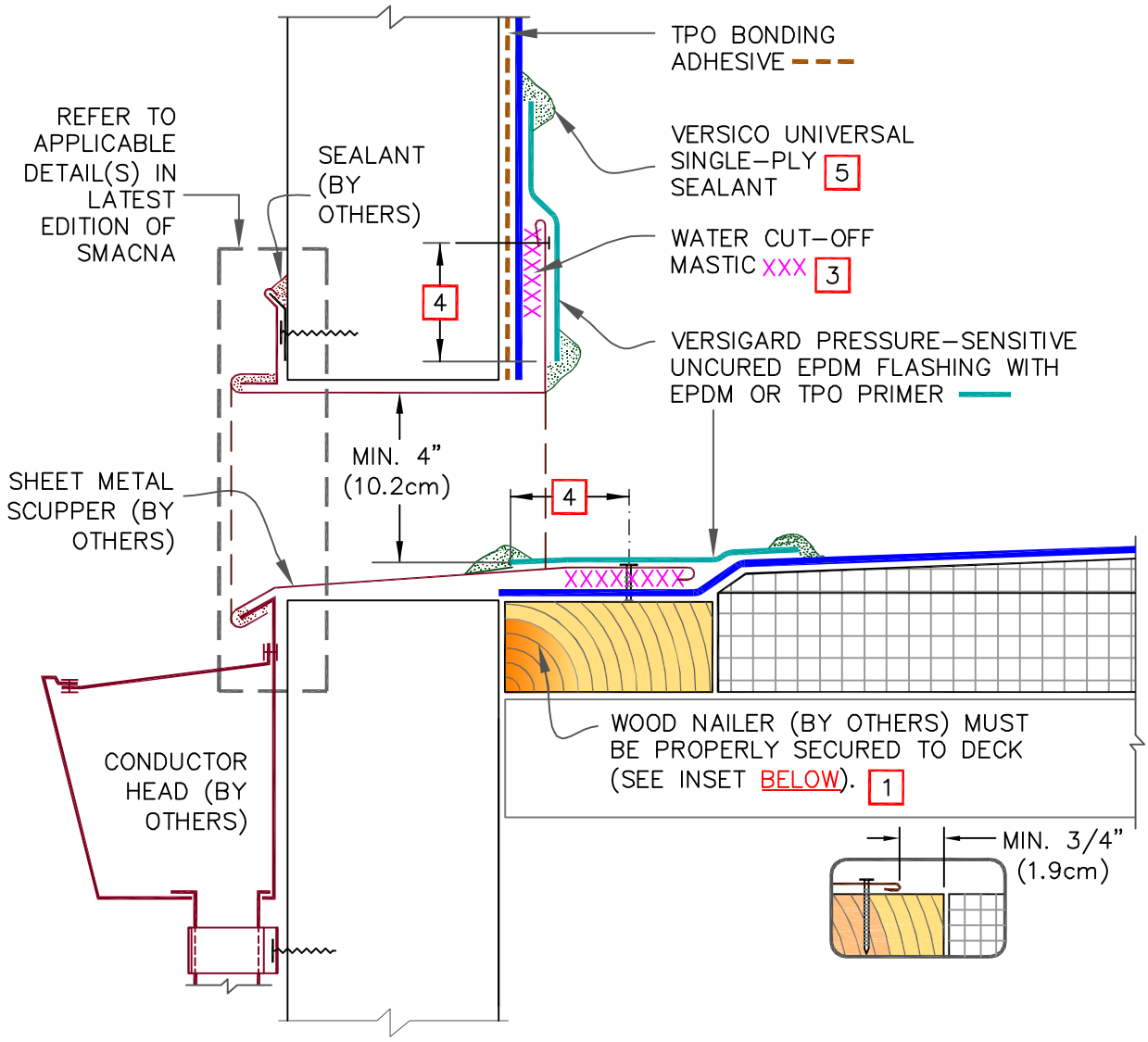

NOTES:

1. WOOD NAILERS ARE INSTALLED AT SCUPPERS TO SECURE METAL SLEEVE AND MUST EXTEND PAST THE WIDTH OF METAL SLEEVE FLANGE.
2. METAL SCUPPER BOX MUST HAVE CONTINUOUS FLANGES WITH ROUNDED CORNERS, SOLDER ALL SCUPPER SEAMS WATER-TIGHT.
3. WATER CUT-OFF MASTIC UNDER SCUPPER FLANGES MUST BE UNDER CONSTANT COMPRESSION.
4. SCUPPER FLANGES MUST BE TOTALLY COVERED BY PRESSURE-SENSITIVE UNCURED FLASHING WITH MINIMUM 2" (5cm) COVERAGE PAST NAIL HEAD.
5. UNIVERSAL SINGLE-PLY SEALANT IS REQUIRED AT FLASHING EDGES ON SCUPPER EDGE. TPO PRIMER MUST BE USED TO PREPARE SURFACES PRIOR TO THE APPLICATION OF SEALANT.

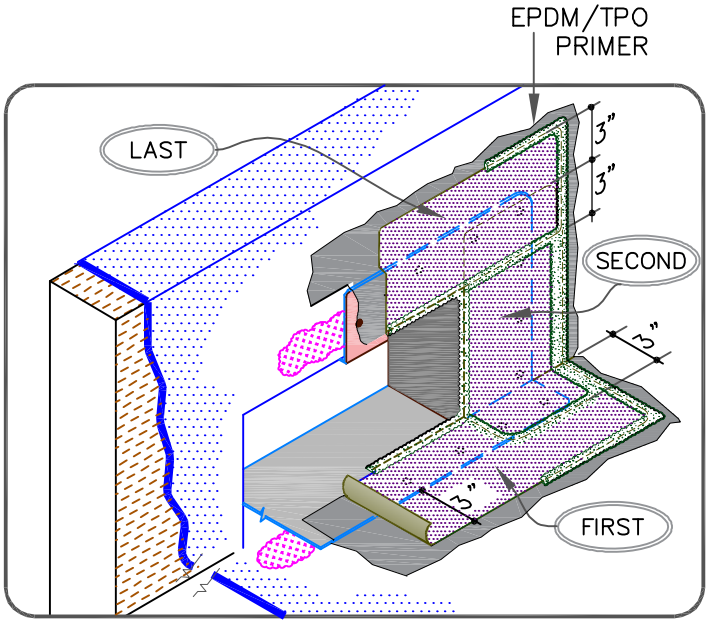

VERSICO ROOFING SYSTEMS
© 2024 VERSICO

SCUPPER WITH EPDM FLASHING (20 YEAR)

MAXIMUM WARRANTY: 20 YEARS

TPO MEMBRANE
APPROVED SUBSTRATE
0 → SEE NOTE

PS (PRESSURE SENSITIVE)
P&S (PEEL & STICK)
QA (QUICK APPLIED)

THERMOPLASTIC ROOFING SYSTEM

TPC-18.2T

TPO WITH EPDM FLASHING

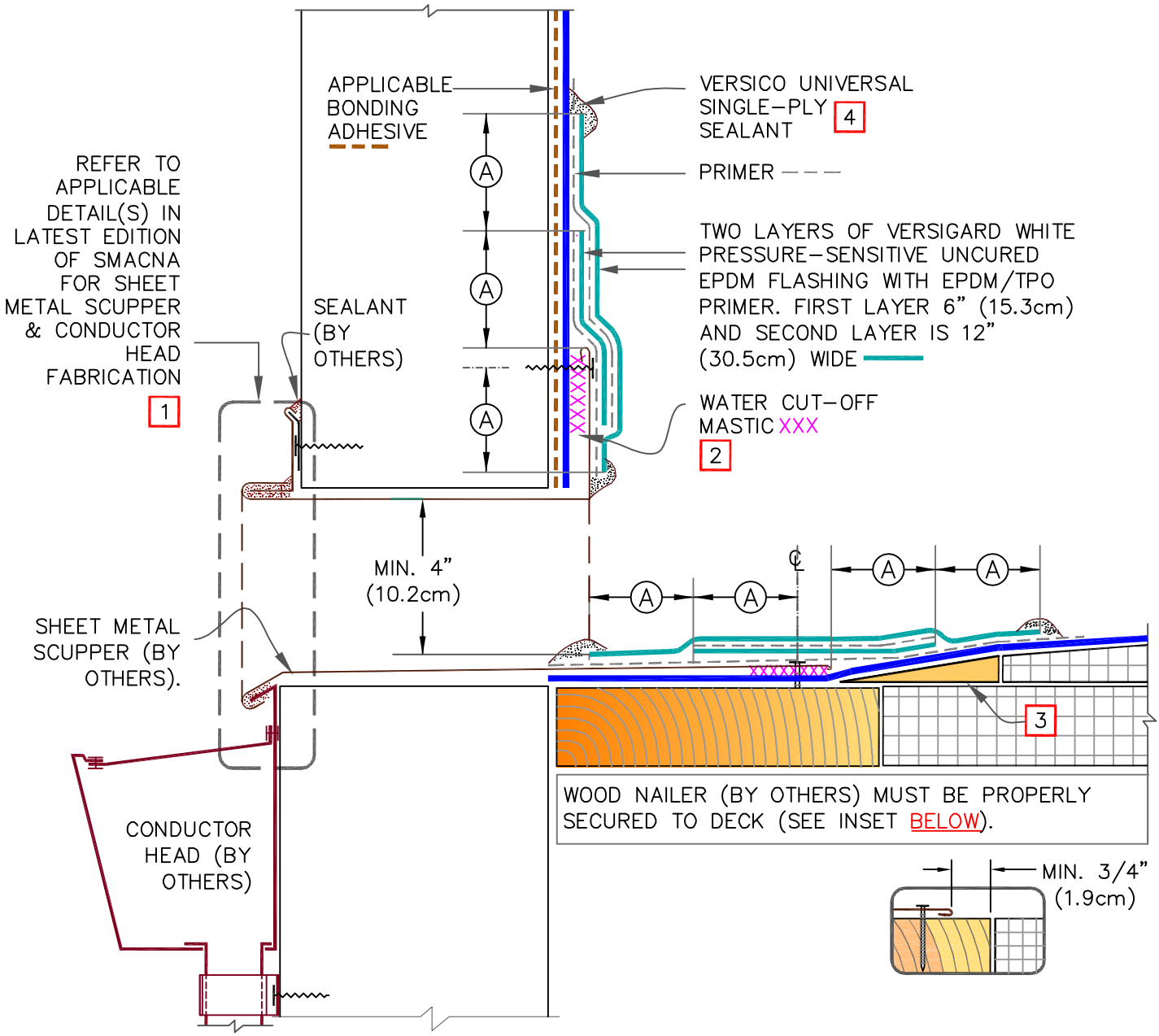

NOTES:

1. METAL SCUPPER BOX MUST HAVE CONTINUOUS FLANGES WITH ROUNDED CORNERS, SOLDER ALL SCUPPER SEAMS AIR & WATER-TIGHT.
2. WATER CUT-OFF MASTIC UNDER SCUPPER FLANGES MUST BE UNDER CONSTANT COMPRESSION.
3. TAPERED EDGE STRIP BY HUNTER OR CANT STRIP, AS REQUIRED & SET IN ADHESIVE OR SHAVE THE EDGES OF TAPERED INSULATION.
4. UNIVERSAL SINGLE-PLY SEALANT IS REQUIRED AT FLASHING EDGES ON SCUPPER EDGE. TPO PRIMER MUST BE USED TO PREPARE SURFACES PRIOR TO THE APPLICATION OF SEALANT.

DIMENSIONS		cm	
A	2"	5	MIN.
B	3"	7.6	MIN.

VERSICO ROOFING SYSTEMS
© 2024 VERSICO

SCUPPER WITH EPDM FLASHING (30 YEAR)
PAGE 1 OF 2

MAXIMUM WARRANTY: 30 YEARS

TPO MEMBRANE
APPROVED SUBSTRATE
0 SEE NOTE
PS (PRESSURE SENSITIVE)
P&S (PEEL & STICK)
QA (QUICK APPLIED)

THERMOPLASTIC ROOFING SYSTEM

TPC-18.3T

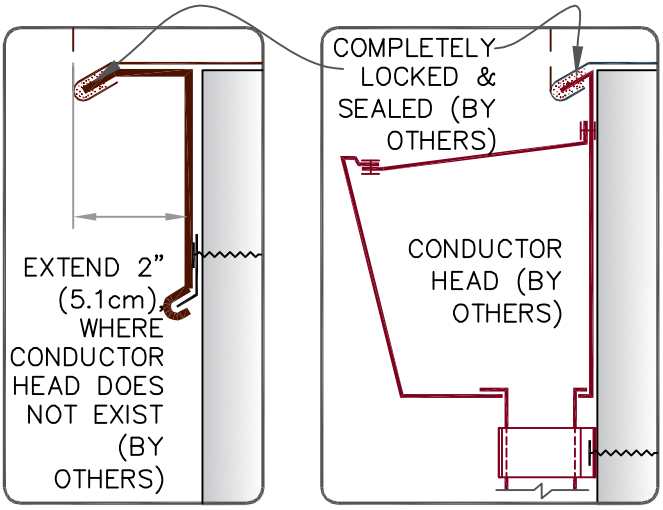

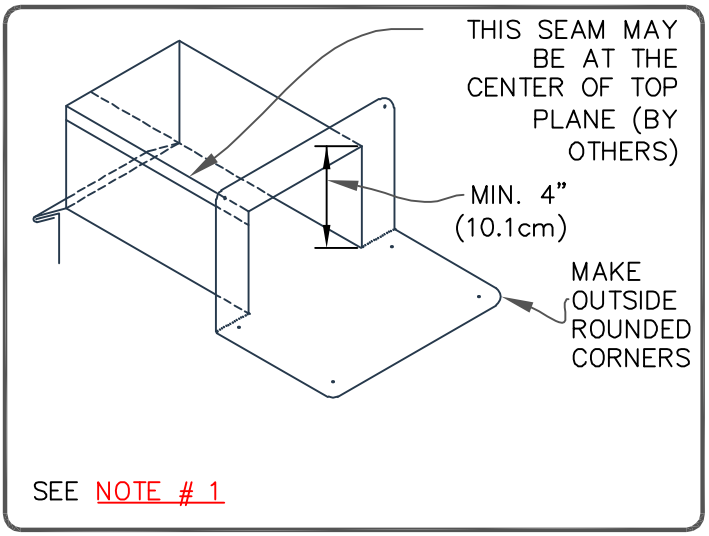

TPO WITH EPDM FLASHING

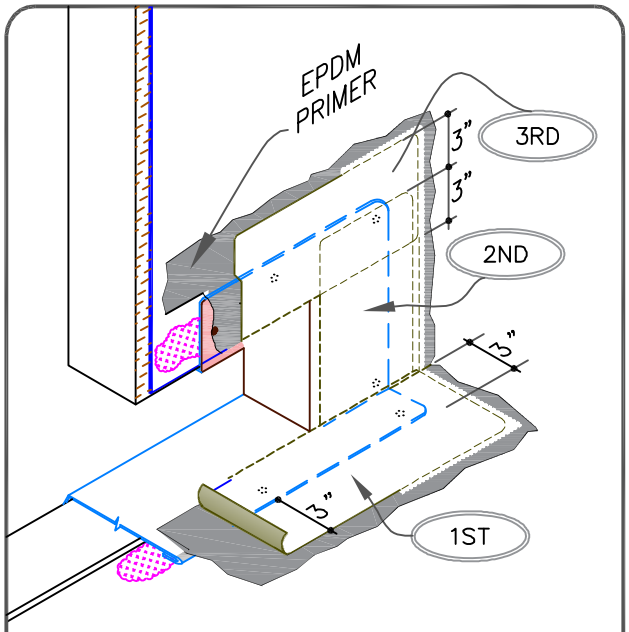

BOTTOM LAYER OF FLASHING

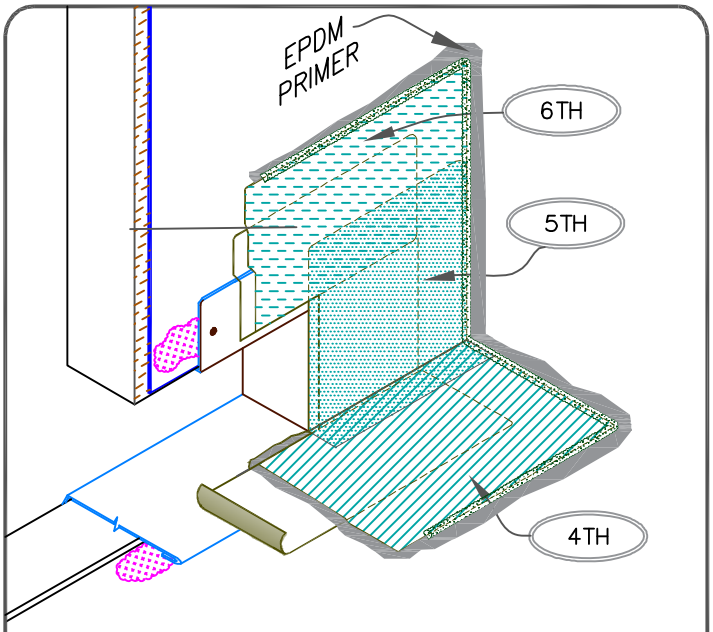

TOP LAYER OF FLASHING

VERSICO ROOFING SYSTEMS
© 2024 VERSICO

SCUPPER WITH EPDM FLASHING (30 YEAR)
PAGE 2 OF 2

MAXIMUM WARRANTY: 30 YEARS

TPO MEMBRANE
APPROVED SUBSTRATE
0 SEE NOTE

PS (PRESSURE SENSITIVE)
P&S (PEEL & STICK)
QA (QUICK APPLIED)

THERMOPLASTIC ROOFING SYSTEM

TPC-18.3T

VersiWeld® TPO
Mechanically Attached and Fully Adhered Roofing Systems

Installation Details Table of Contents

January 2024

Mechanically Attached — **Detail**
Membrane Securement TPMA-2.0A
TPO Membrane Securement with Pressure-Sensitive RUSS TPMA-2.0B
Mechanically Attached Membrane Splice Page 1 of 2 ..... TPMA-2.1
Fastener and Plate Placement Page 2 of 2 ..... TPMA-2.1
Ridge Membrane Attachment TPMA-22.0

Metal Edges and Gravel Stops
VersiTrim Drip Edge Fascia TPC-1.1
VersiTrim Heat Weldable Drip Edge Fascia TPC-1.2
Metal Bar Edge Termination TPC-1.3
VersiTrim 200 ..... TPC-1.4
VersiTrim 300 ..... TPC-1.5
VersiTrim 2000 & 3000 ..... TPC-1.6

Membrane Splices
Membrane Splice TPC-2.0
Self-Adhering TPO Membrane Splice TPC-2.1

Expansion Joints
Deck-to-Deck Roof Expansion Joint TPC-3.1
Deck-to-Deck Curbed Expansion Joint TPC-3.1A
Deck-to-Wall Expansion Joint TPC-3.2

Curb Flashing
Curb Flashing With TPO Membrane TPC-5.1
Coated Flashing With TPO Metal Curb Flashing TPC-5.2
Curb Flashing With CFA TPO Curb Wrap Corners TPC-5.3
Self-Flashing Curb TPC-5.4

Drains
Roof Drain: Sump Slope Less Than 3 inches to One Horizontal Foot TPC-6.1
Roof Drain: Sump Slope Greater than 3 inches to One Horizontal Foot (Option 1) TPC-6.2
Roof Drain: Sump Slope Greater than 3 inches to One Horizontal Foot (Option 2) Page 1 of 2 ..... TPC-6.3
Roof Drain: Sump Slope Greater than 3 inches to One Horizontal Foot (Option 2) Page 2 of 2 ..... TPC-6.3
Add-On Drain TPC-6.4

Pipe Flashing
Pre-Molded Flashing TPC-8.1
Field Fabricated Pipe Flashing TPC-8.2
Certified Pre-Fabricated Square Tube Wrap TPC-8.3
Field-Fabricated Square Tube Flashing TPC-8.4
Certified Pre-Fabricated Split Pipe Seal TPC-8.5
Certified Hot Pipe Flashing TPC-8.6

Terminations
Membrane Terminations, Page 1 of 3 ..... TPC-9.0
Membrane Terminations, Page 2 of 3 ..... TPC-9.0
Membrane Terminations, Page 3 of 3 ..... TPC-9.0

Parapet Flashing

Parapet Base Flashing – Fastened Into Deck Or Wall TPC-12.1
Parapet Flashing with Pressure-Sensitive RUSS, Page 1 of 2 ..... TPC-12.2A
Parapet Flashing with Pressure-Sensitive RUSS, Page 2 of 2 ..... TPC-12.2B
Coated Metal Wall Flashing TPC-12.3
Parapet Flashing / No Adhesion – Any Height Option TPC-12.6
VersiWeld QA TPO Parapet Flashing with TPO PS RUSS TPC-12.7
VersiWeld QA TPO Parapet Flashing with VersiWeld QA TPO RTS TPC-12.8

Tie-Ins

TPO Tie-In To Built-Up Roofing Over Steel Roof Deck TPC-13.1
TPO Tie-In To Built-Up Roofing Over Concrete Roof Deck TPC-13.2
TPO Tie-In To Existing Single-Ply Roof with Curb TPC-13.3
TPO Tie-In to Existing EPDM/TPO Membrane TPC-13.4
EPDM/TPO Tie-In on Concrete Deck TPC-13.5
TPO Tie-In to Shingled or Metal Panel Roof TPC-13.6

Inside / Outside Corners

Pre-Molded Inside Corner Flashing TPC-15.1
Field Fabricated Inside Corner Flashing TPC-15.2
Inside Corner with Coated Metal Wall Flashing TPC-15.3
Pre-Molded Outside Corner Flashing TPC-15.4
Field Fabricated Outside Corner Flashing TPC-15.5
Outside Corner with Coated Metal Wall Flashing TPC-15.6
TPO Universal Corners – Combination Inside & Outside Corners TPC-15.7

Sealant Pocket

Molded Sealant Pocket TPC-16.1
Field Fabricated TPO Coated Metal Pocket TPC-16.2

Through-Wall Scupper

Prefabricated Scupper with Coated Metal TPC-18.1

Lightning Rods

Lightning Rod at Parapet (Vertical Attachment) TPC-20.1
Lightning Rod at Deck Level TPC-20.2

Sleeper

Sleeper TPC-24.0

Accessories

VersiWeld TPO Rib: Typical Profile TPC-25.1
VersiWeld TPO Rib: Various Applications TPC-25.2
VersiWeld TPO Rib: Example of Dome with Ribs Aligned over Membrane Seams TPC-25.3

GUIDELINES FOR ROOF PERIMETER ZONES FOR MECHANICALLY ATTACHED ROOF SYSTEM

PERIMETER ZONES

SAME LEVEL ROOF

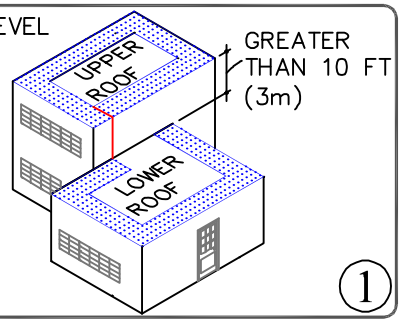

1

SPLIT LEVEL ROOFS

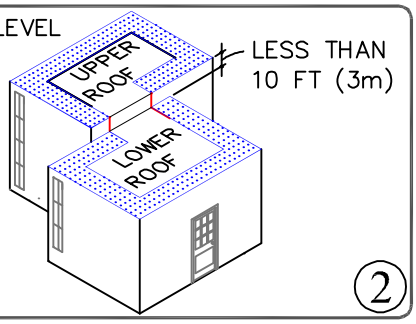

2

CANOPY ROOF

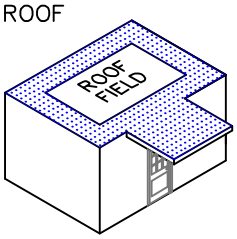

INSTALL PERIMETER SHEETS OVER THE ENTIRE OVERHANG (PROJECTION ROOF) AREA, EXTENDING ONTO THE MAIN ROOF DECK WHEN AT THE SAME LEVEL AS SHOWN.

3

LARGE OPENINGS OR LOADING DOCKS

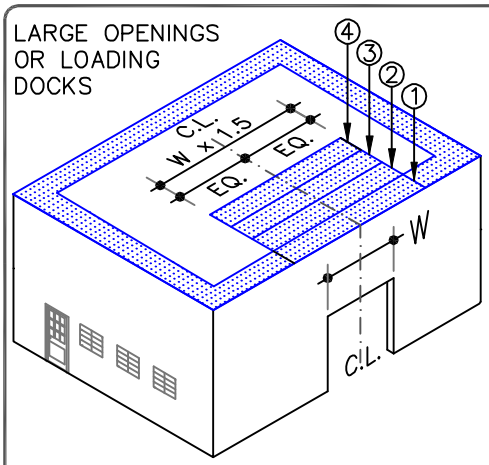

4 PERIMETER SHEETS CENTERED OVER LARGE OPENINGS

4

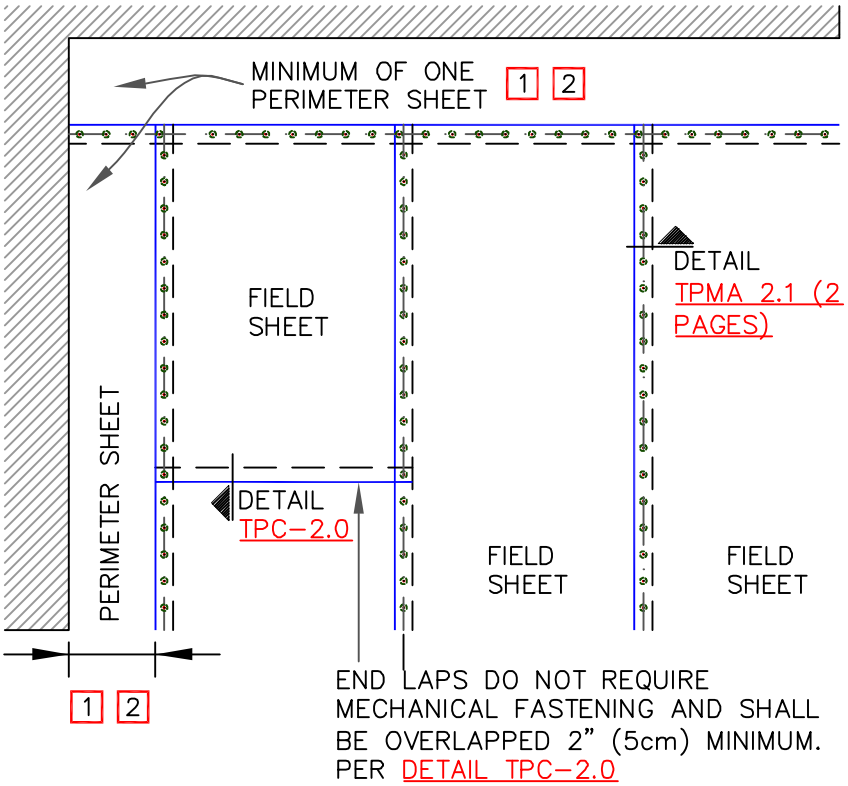

NOTES:

1. PERIMETER SHEETS:

   1.1. WHEN USING 10' (3m) OR 12' (3.7m) WIDE FIELD SHEETS, 6' (1.8m) WIDE PERIMETER SHEETS ARE USED.

   1.2. WHEN USING 8' (2.4m) WIDE FIELD SHEETS, 4' (1.2m) WIDE PERIMETER SHEETS ARE USED.

2. REFER TO VERSICO SPECIFICATIONS FOR REQUIRED NUMBER OF PERIMETER SHEETS, SHEET WIDTH AND MEMBRANE FASTENING SPACING.

© 2024 VERSICO

MEMBRANE SECUREMENT

MAXIMUM WARRANTY: 30 YEARS

TPO MEMBRANE
APPROVED SUBSTRATE
0 SEE NOTE
PS (PRESSURE SENSITIVE)

TPMA (Thermoplastic Mechanically Attached Membrane)

TPMA-2.0A

GUIDELINES FOR ROOF PERIMETER ZONES FOR MECHANICALLY ATTACHED ROOF SYSTEM

PERIMETER ZONES

SAME LEVEL ROOF

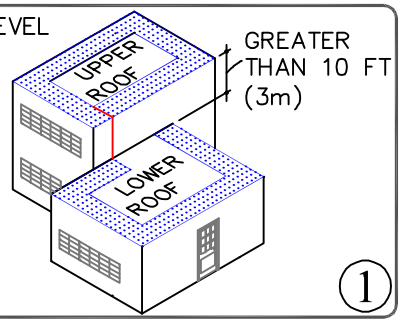

1

SPLIT LEVEL ROOFS

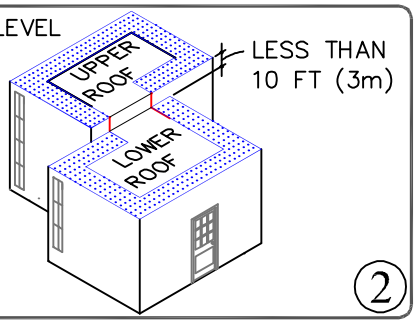

2

CANOPY ROOF

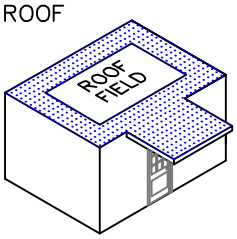

INSTALL PERIMETER SHEETS OVER THE ENTIRE OVERHANG (PROJECTION ROOF) AREA, EXTENDING ONTO THE MAIN ROOF DECK WHEN AT THE SAME LEVEL AS SHOWN.

3

LARGE OPENINGS OR LOADING DOCKS

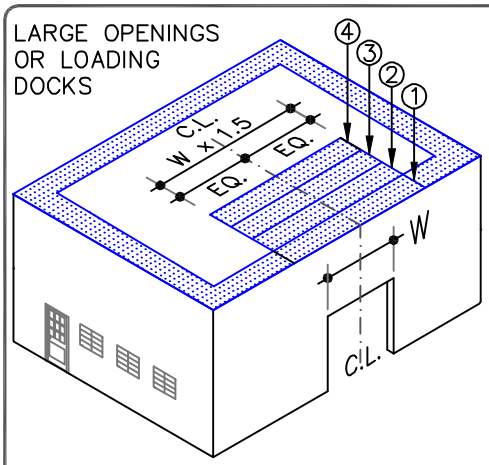

4 PERIMETER SHEETS CENTERED OVER LARGE OPENINGS

4

RTS (REINFORCED TERMINATION STRIP)

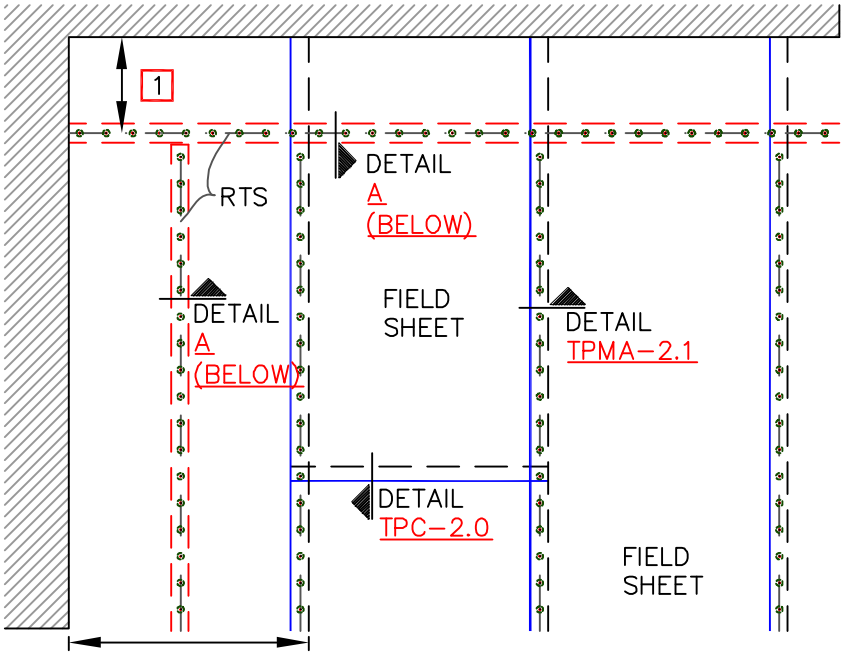

12' (3.7m), 10' (3m) OR 8' (2.4m) WIDE SHEETS

TPO PRIMER MUST BE APPLIED TO THE BACK SIDE OF MEMBRANE SURFACE PRIOR TO ADHERING MEMBRANE TO QA RTS.

10" (25cm) WIDE TPO PEEL & STICK REINFORCED TERMINATION STRIP (QA RTS)

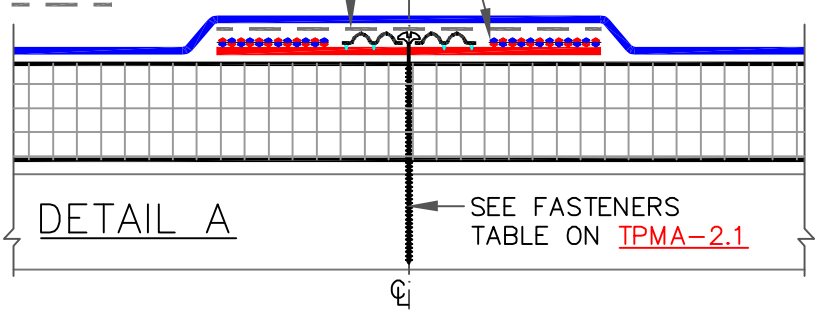

NOTES:

1. QUICK–APPLIED RTS SHALL BE POSITIONED 5' (1.5m) TO 6' (1.8m) FROM THE PERIMETER EDGE WHEN USING 10' (3m) OR 12' (3.7m) WIDE TPO FIELD SHEETS. WHEN USING 8' (2.4m) WIDE TPO FIELD SHEETS, QUICK–APPLIED RTS SHALL BE POSITIONED 4' (1.2m) FROM THE PERIMETER EDGE.

2. REFER TO VERSICO SPECIFICATIONS FOR REQUIRED NUMBER OF PERIMETER SHEETS, SHEET WIDTH AND MEMBRANE FASTENING DENSITY.

VERSICO ROOFING SYSTEMS

© 2024 VERSICO

TPO MEMBRANE SECUREMENT WITH QUICK–APPLIED RTS

MAXIMUM WARRANTY: 30 YEARS

TPO MEMBRANE

APPROVED SUBSTRATE

0 SEE NOTE

PS (PRESSURE SENSITIVE)

TPMA (Thermoplastic Mechanically Attached Membrane)

TPMA–2.0B

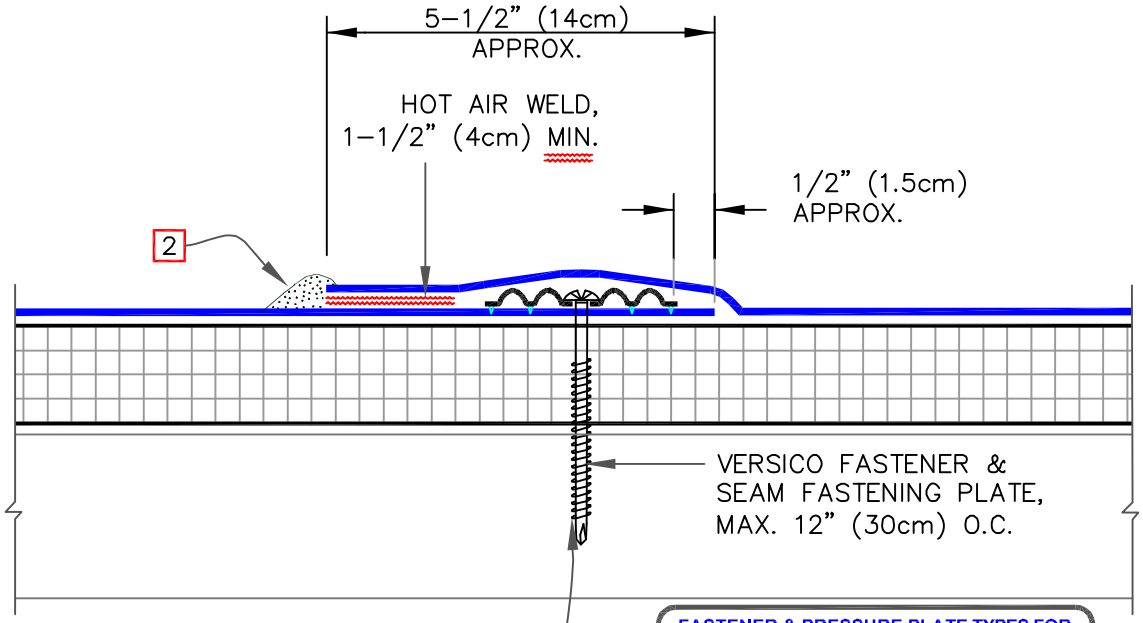

FASTENER & PRESSURE PLATE TYPES FOR DIFFERENT ROOF DECKS

DECK TYPE	OPTION	FASTENER	PLATE
STEEL OR WOOD	A	HPVX	HPVX
	B	HPV–XL	HPV–XL
STRUCTURAL CONCRETE	A	CD–10	HPVX
	B	MP 14–10	HPVX

NOTES:

1. POSITION SEAM FASTENING PLATES BEYOND NON–REINFORCED ENCAPSULATED EDGE.

2. APPROXIMATELY 1/8" (0.5cm) DIAMETER BEAD OF CUT–EDGE SEALANT IS REQUIRED ON CUT EDGES OF REINFORCED TPO MEMBRANE.

WHEN USING 60 OR 80-MIL (1.52/2.03mm) THICK MEMBRANE
APPLY A 4–1/2" (11.8cm) DIAMETER "T–JOINT" COVER AT FIELD SPLICE INTERSECTIONS, CENTRALLY ALIGNED.

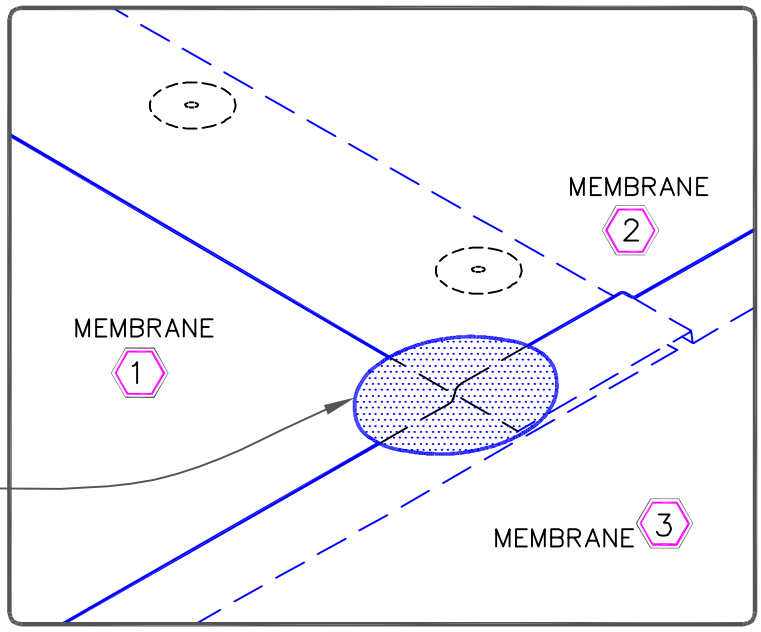

VERSICO ROOFING SYSTEMS
© 2024 VERSICO

MECHANICALLY ATTACHED SEAM, PAGE 1 OF 2

MAXIMUM WARRANTY: 30 YEARS

→ TPO MEMBRANE
→ APPROVED SUBSTRATE
0 → SEE NOTE
PS (PRESSURE SENSITIVE)

TPMA (Thermoplastic Mechanically Attached Membrane)

TPMA–2.1

FASTENER & PRESSURE PLATE TYPES FOR DIFFERENT ROOF DECKS

DECK TYPE	OPTION	FASTENER	PLATE
STEEL OR WOOD	A	HPVX	HPVX
	B	HPV–XL	HPV–XL
STRUCTURAL CONCRETE	A	CD–10	HPVX
	B	MP 14–10	HPVX

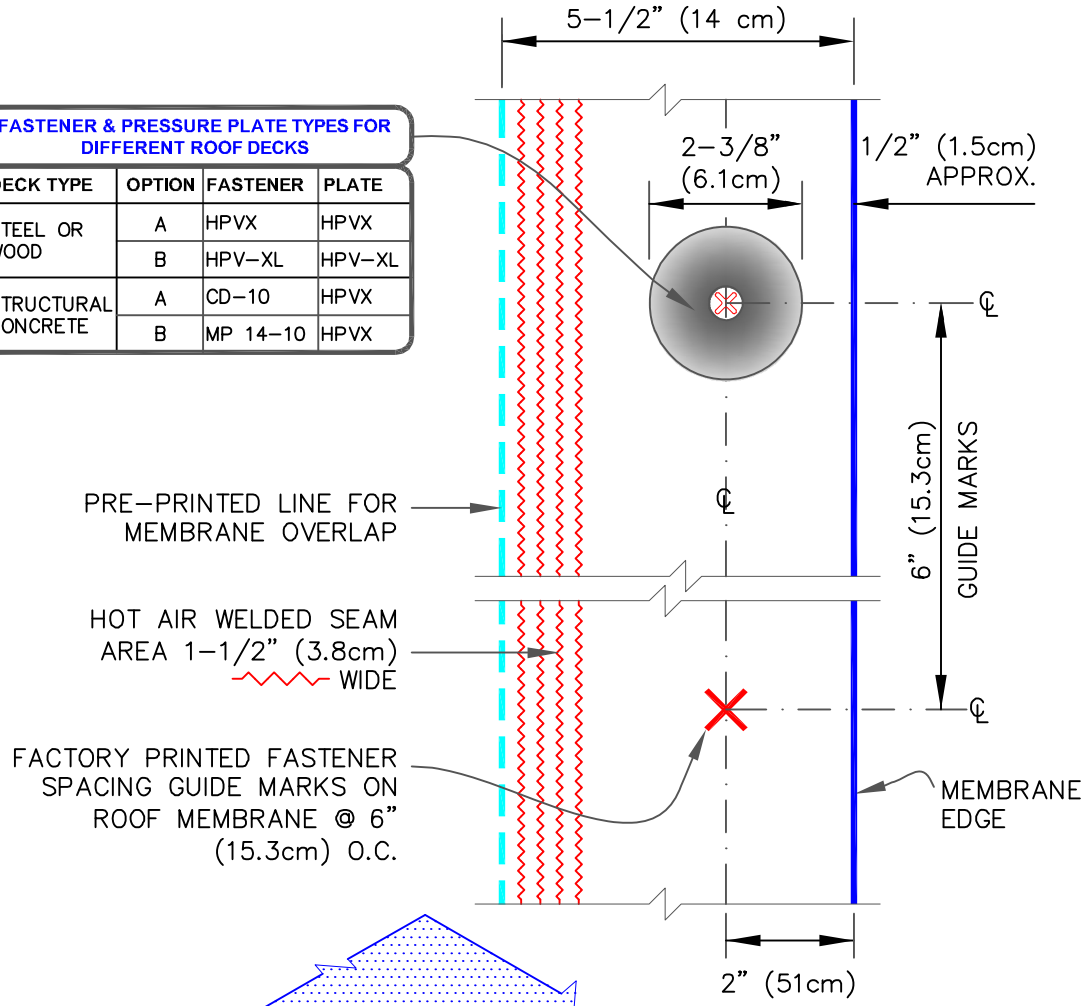

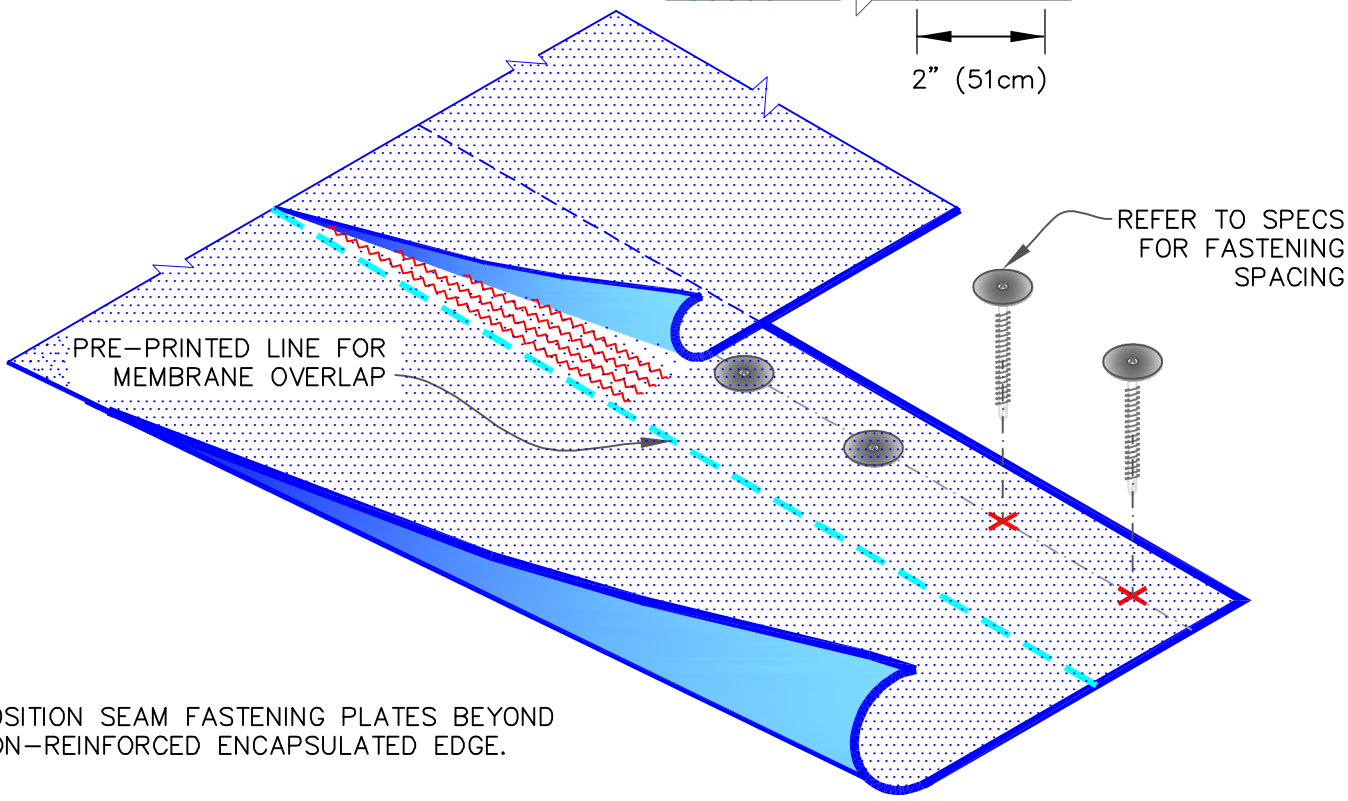

NOTE:

1. POSITION SEAM FASTENING PLATES BEYOND NON–REINFORCED ENCAPSULATED EDGE.

VERSICO ROOFING SYSTEMS
© 2024 VERSICO

MECHANICALLY ATTACHED SEAM, PAGE 2 OF 2

MAXIMUM WARRANTY: 30 YEARS

TPO MEMBRANE
APPROVED SUBSTRATE
0 SEE NOTE
PS (PRESSURE SENSITIVE)

TPMA (Thermoplastic Mechanically Attached Membrane)

TPMA–2.1

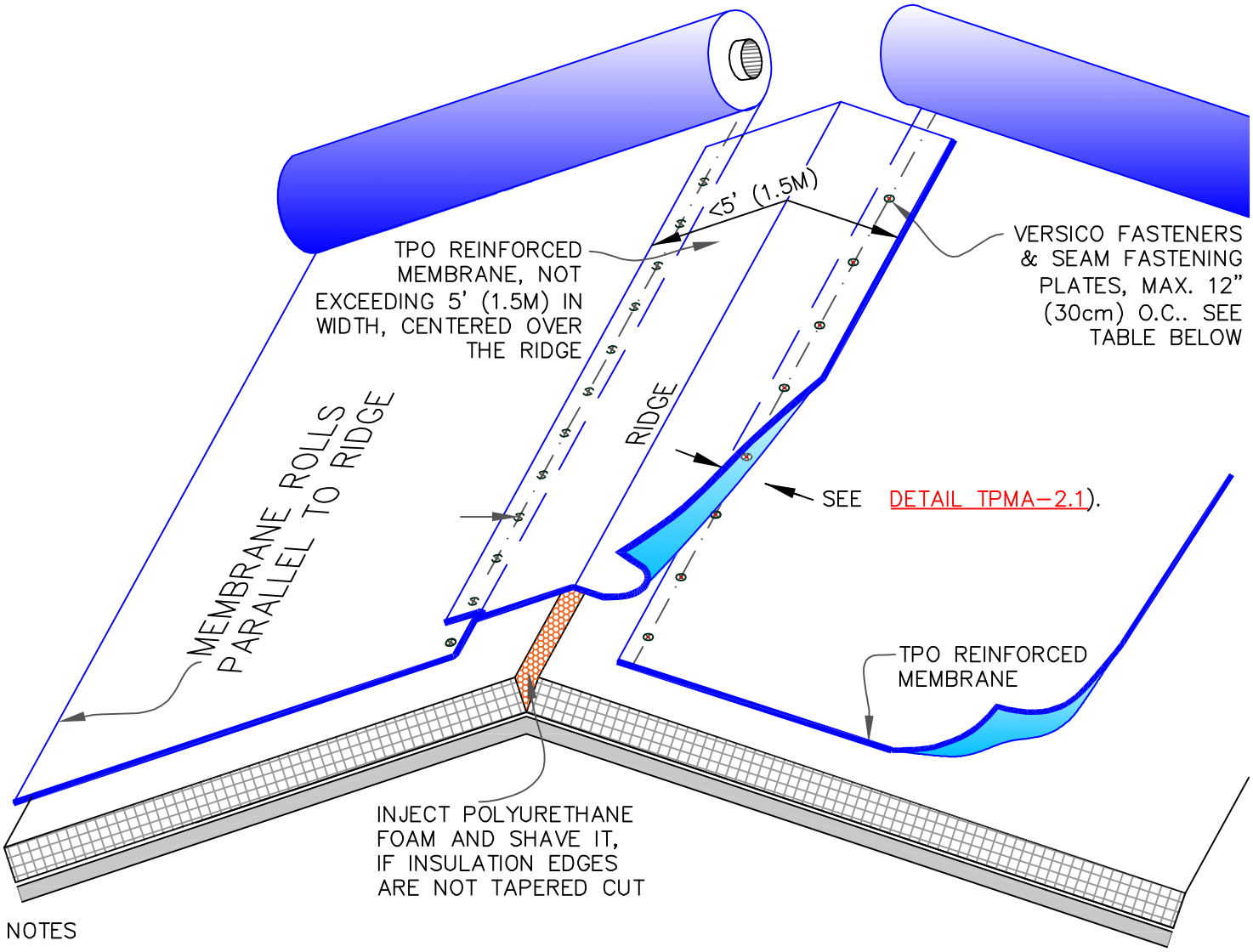

NOTES

1. RIDGE MEMBRANE ATTACHMENT IS ONLY REQUIRED WHEN ROOF SLOPE EXCEEDS 3" (7.5cm) TO 12" (30.5cm) HORIZONTAL.

2. REFER TO VERSICO SPECIFICATIONS FOR REQUIRED NUMBER OF PERIMETER SHEETS, SHEET WIDTH AND MEMBRANE FASTENING SPACING.

3. AS AN OPTION TO USING PERIMETER SHEETS, 10" (25cm) WIDE TPO QUICK-APPLIED REINFORCED TERMINATION STRIP (QA RTS) MAY BE USED BENEATH THE TPO FIELD SHEETS ONLY FOR PERIMETER SECUREMENT. SEE DETAIL TPMA-2.0B, DETAIL A

4. APPROXIMATELY 1/8" (0.5cm) DIAMETER BEAD OF CUT-EDGE SEALANT IS REQUIRED ON CUT EDGES OF REINFORCED TPO MEMBRANE.

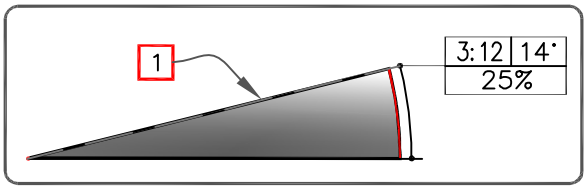

FASTENER & PRESSURE PLATE TYPES FOR DIFFERENT ROOF DECKS

DECK TYPE	OPTION	FASTENER	PLATE
STEEL OR WOOD	A	HPVX	HPVX
	B	HPV-XL	HPV-XL
STRUCTURAL CONCRETE	A	CD-10	HPVX
	B	MP 14-10	HPVX

VERSICO ROOFING SYSTEMS
© 2024 VERSICO

RIDGE MEMBRANE ATTACHMENT

MAXIMUM WARRANTY: 30 YEARS

TPO MEMBRANE
APPROVED SUBSTRATE
0 SEE NOTE
PS (PRESSURE SENSITIVE)

TPMA (Thermoplastic Mechanically Attached Membrane)

TPMA-22.0

CAUTIONS

- DETAIL B IS NOT RECOMMENDED FOR ROOFS THAT ARE LIKELY TO EXPERIENCE SIGNIFICANT SNOW AND ICE UP-SLOPE FROM THE GUTTER /EDGE. REFER TO DETAILS TPC-1.2 OR TPC-1.3.
- FOR 30-YEAR WARRANTY PROJECTS, SEE ALSO DETAILS TPC-1.2, 1.3, 1.4, 1.5, & 1.6

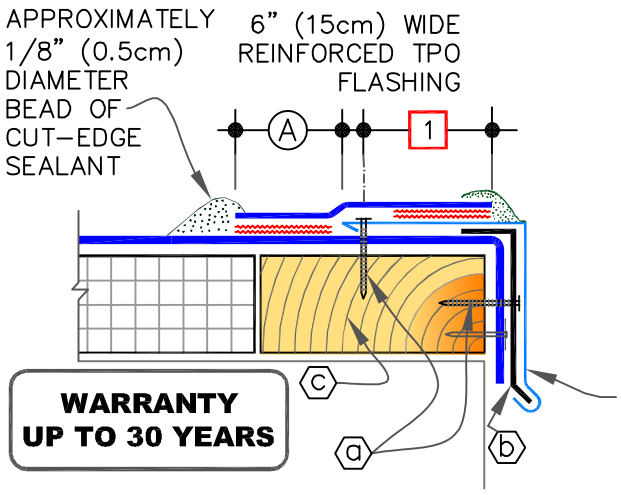

A VERSITRIM HEAT WELDABLE DRIP EDGE FASCIA

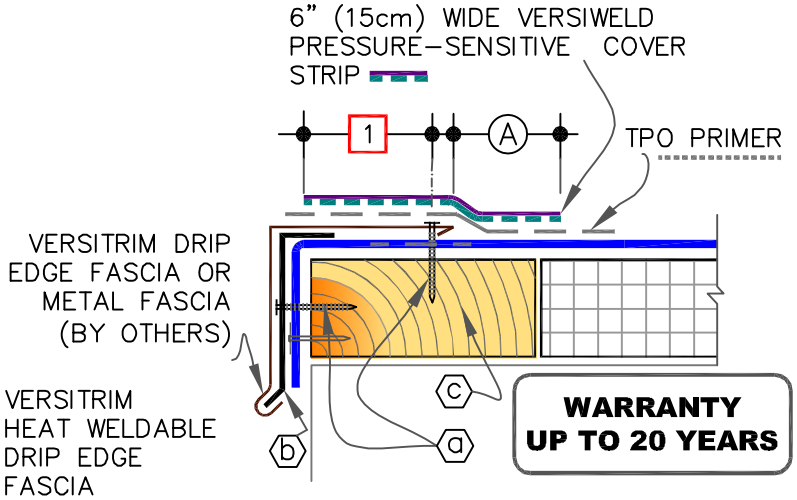

B VERSITRIM DRIP EDGE FASCIA

(a) M1-1/2" (3.8cm) RING SHANK NAILS 6" (15cm) O.C. MAX.

(b) MINIMUM 22-GAUGE CONTINUOUS CLEAT.

(c) WOOD NAILER (BY OTHERS)

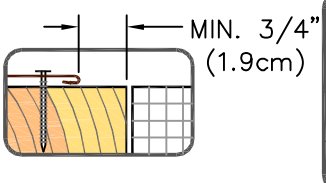

DIMENSIONS		cm	
A	2"	5	MIN.
B	1/2"	1.5	TO
	1"	2.5	

NOTES:

1. METAL FASCIA DECK FLANGE MUST BE TOTALLY COVERED BY TPO PEEL & STICK COVER STRIP WITH MINIMUM 2" (5cm) COVERAGE PAST NAIL HEADS.
2. TO REMOVE FINISHING OILS, SCRUB METAL FLANGE WITH WEATHERED MEMBRANE CLEANER; ALLOW TO DRY PRIOR TO APPLYING TPO PRIMER.
3. WHEN METAL FASCIA BY OTHERS IS USED, FASTENER TYPE AND FASTENING FREQUENCY SHALL BE RECOMMENDED BY METAL EDGE MANUFACTURER.
4. TO ENSURE TPO PEEL & STICK COVER STRIP CONFORMS TO STEP-OFFS, HEAT COVER STRIP AT SPLICE INTERSECTIONS PRIOR TO ROLLING.

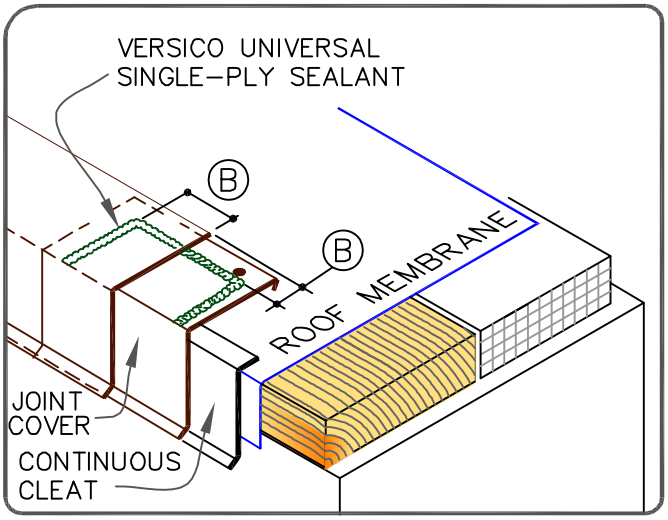

© 2024 VERSICO

VERSITRIM DRIP EDGE FASCIA

MAXIMUM WARRANTY: 20 YEARS

TPO MEMBRANE | APPROVED SUBSTRATE | 0 SEE NOTE | PS (PRESSURE SENSITIVE) | P&S (PEEL & STICK) | QA (QUICK APPLIED)

THERMOPLASTIC ROOFING SYSTEM

TPC-1.1

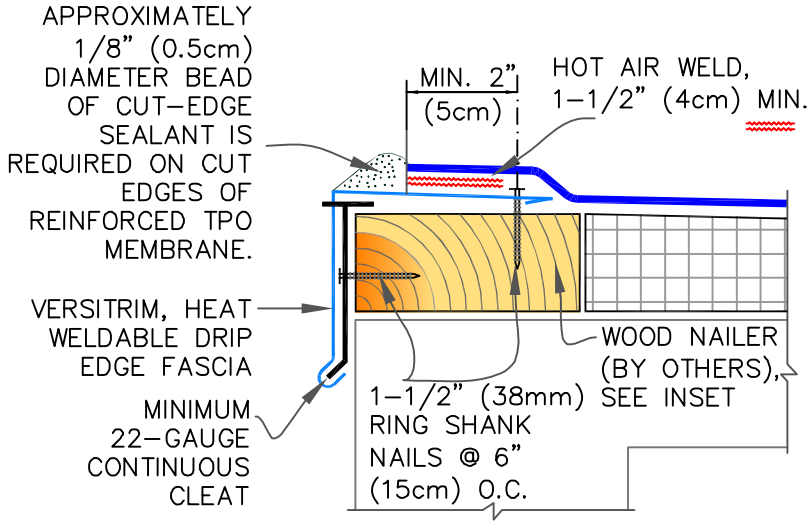

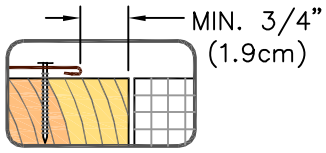

SEQUENCE:
1. 3" (7.6cm) REINFORCED MEMBRANE STRIPPING.
2. FIELD MEMBRANE.
3. TOP 6" (15.2cm) NON-REINFORCED MEMBRANE STRIPPING.

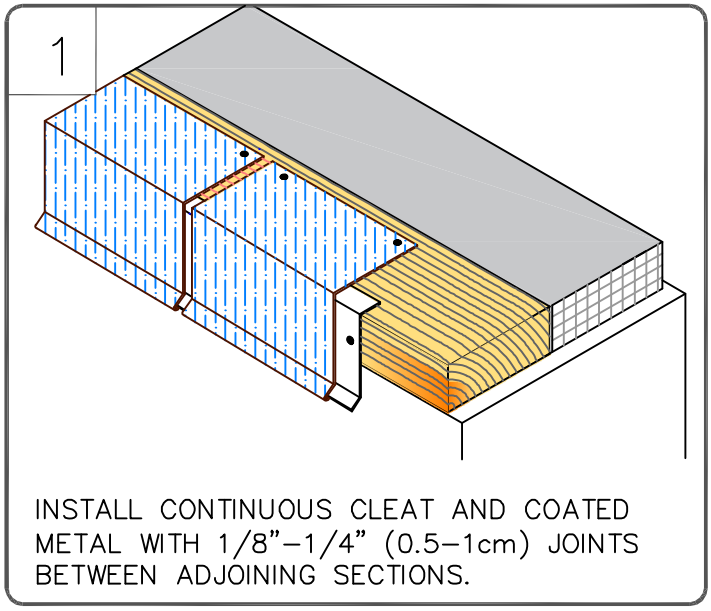

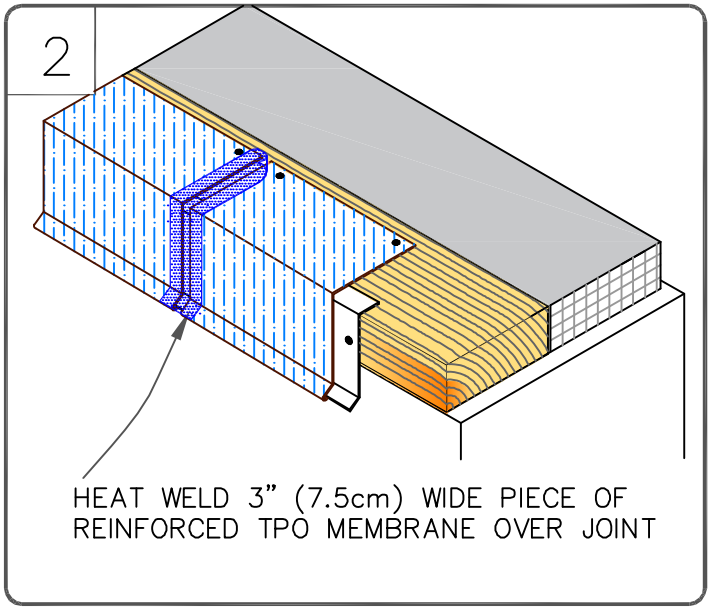

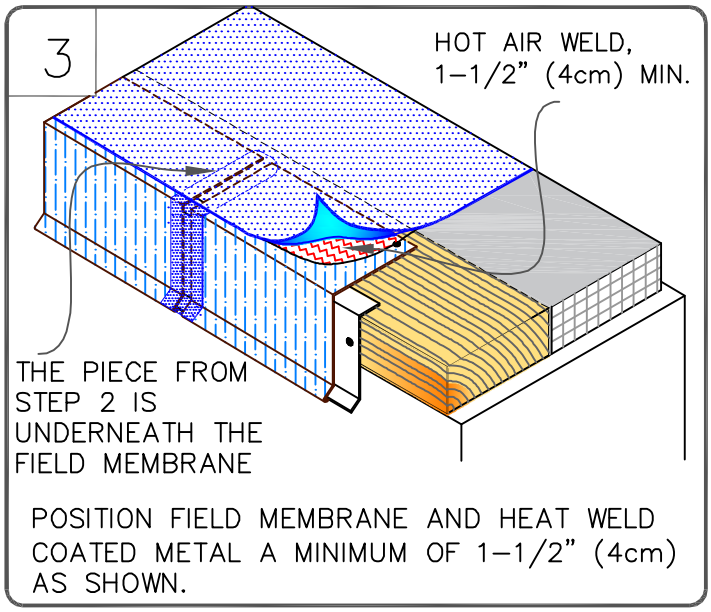

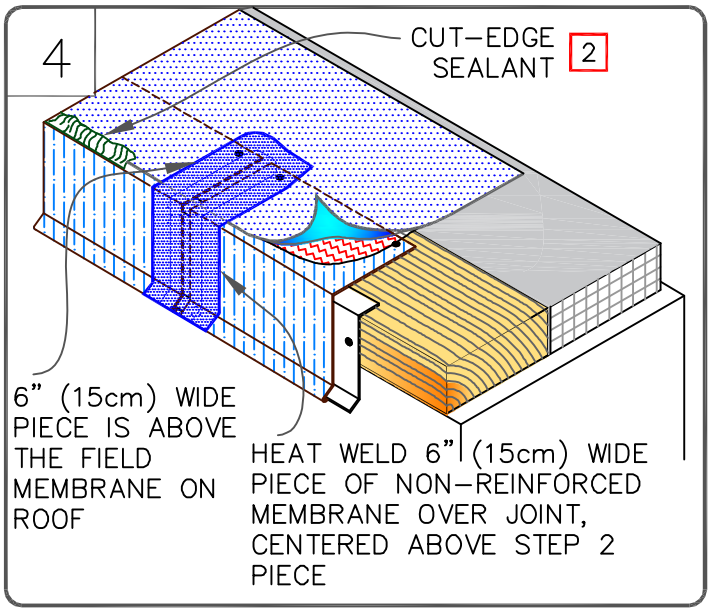

VERSICO ROOFING SYSTEMS
© 2024 VERSICO

VERSITRIM HEAT WELDABLE DRIP EDGE FASCIA

MAXIMUM WARRANTY: 30 YEARS

TPO MEMBRANE
APPROVED SUBSTRATE
0 → SEE NOTE

PS (PRESSURE SENSITIVE)
P&S (PEEL & STICK)
QA (QUICK APPLIED)

THERMOPLASTIC ROOFING SYSTEM

TPC-1.2

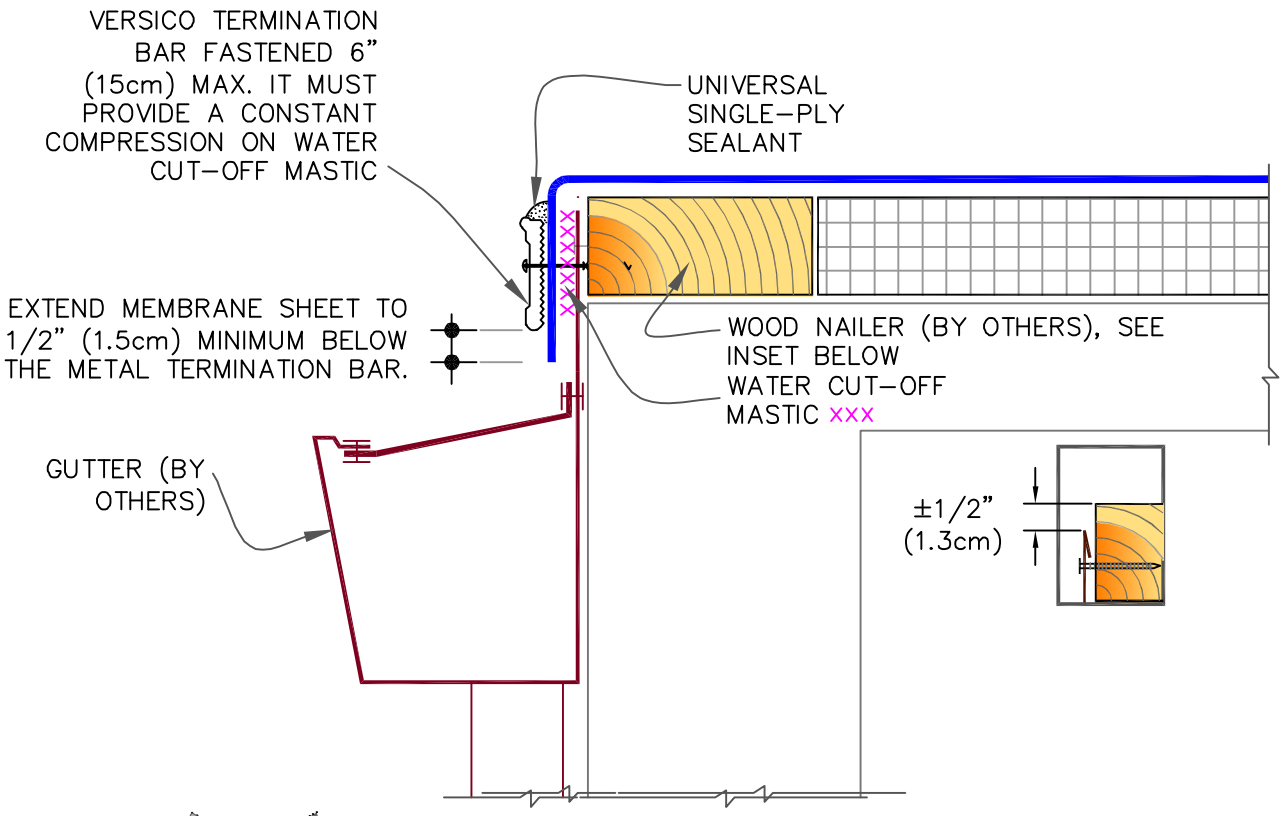

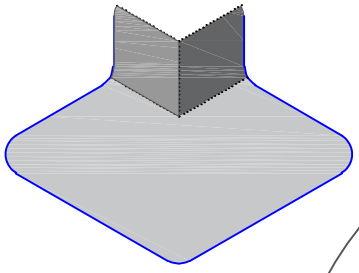

60-MIL (1.52mm) THICK TPO, UNIVERSAL CORNER CAN BE USED FOR AT TOP CORNER. CUT AS SHOWN IN DETAIL TPC-15.7

DESIGNER MAY USE VERSICO VERSITRIM TERMINATION BAR WITH FASCIA COVER ALSO

COLORED COVER

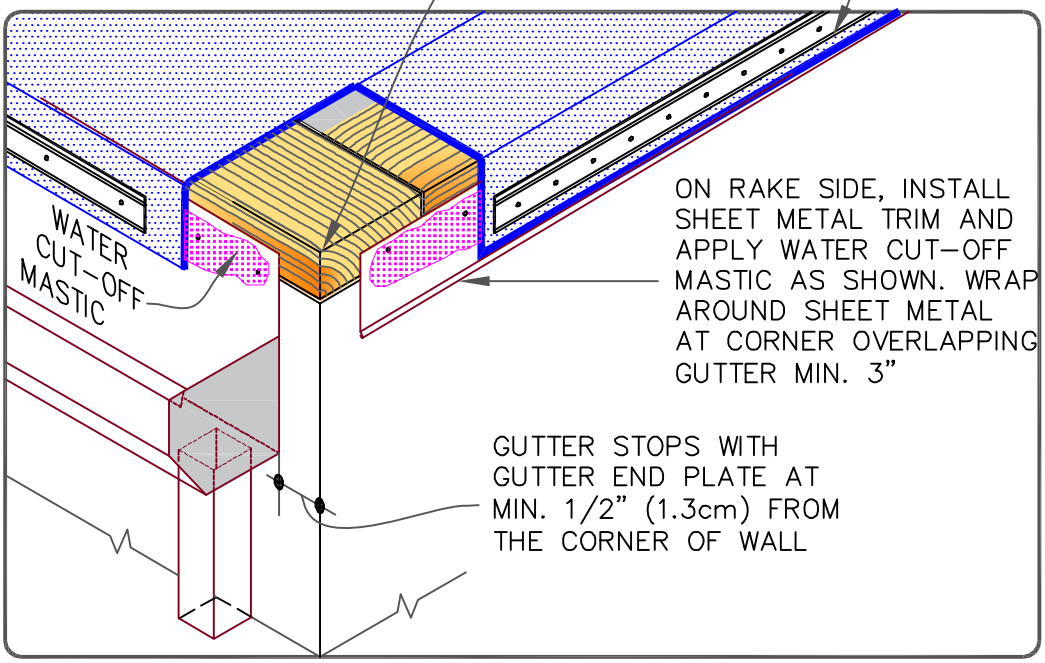

VERSICO ROOFING SYSTEMS
© 2024 VERSICO

METAL BAR EDGE TERMINATION

MAXIMUM WARRANTY: 30 YEARS

TPO MEMBRANE
APPROVED SUBSTRATE
0 → SEE NOTE

PS (PRESSURE SENSITIVE)
P&S (PEEL & STICK)
QA (QUICK APPLIED)

THERMOPLASTIC ROOFING SYSTEM

TPC-1.3

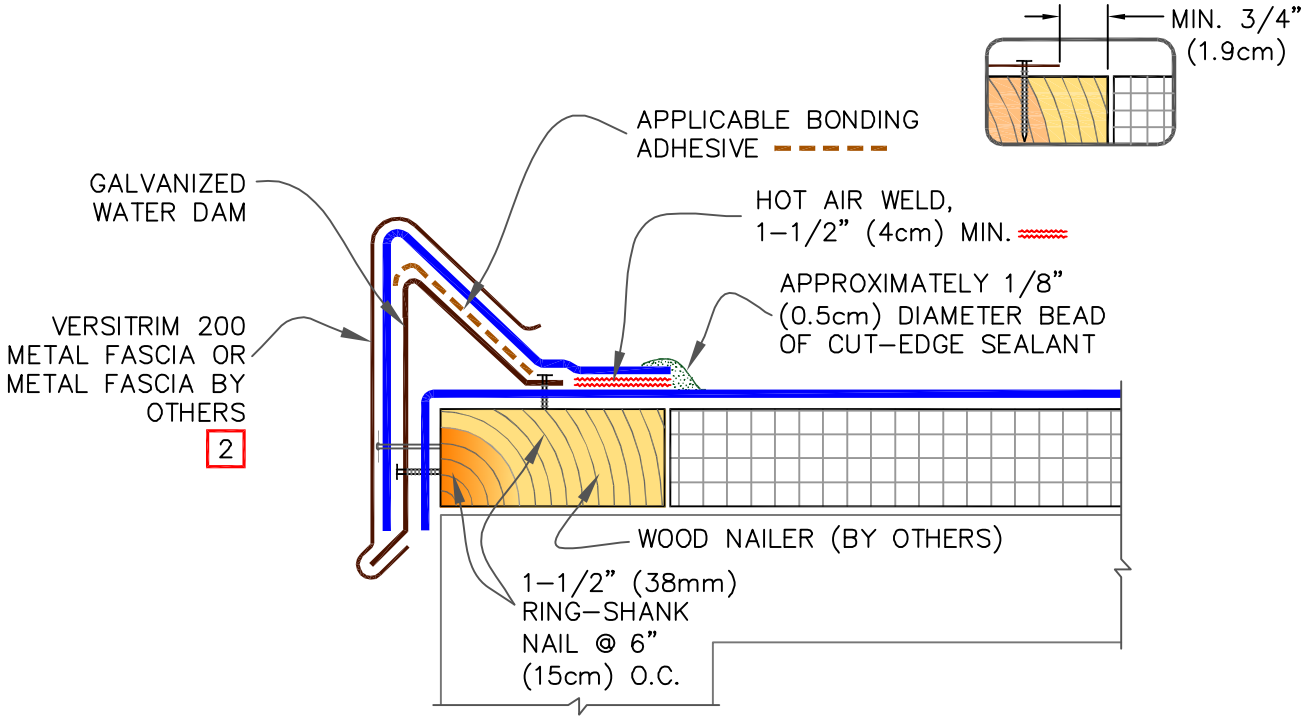

NOTES:

1. REFER TO VERSITRIM 200 INSTRUCTION MANUAL FOR STEP–BY–STEP INSTALLATION PROCEDURES.

2. WHEN METAL FASCIA BY OTHERS IS USED, FASTENER TYPE AND FASTENING FREQUENCY SHALL BE RECOMMENDED BY METAL EDGE MANUFACTURER.

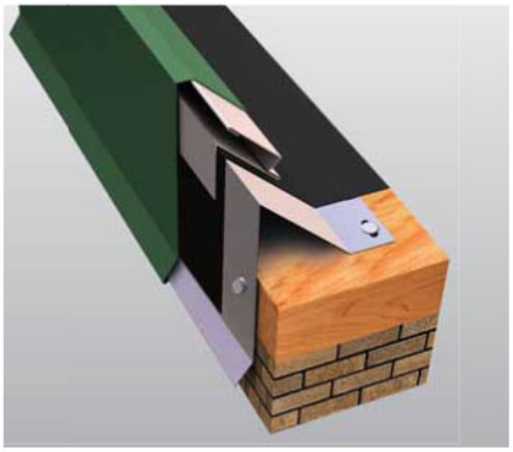

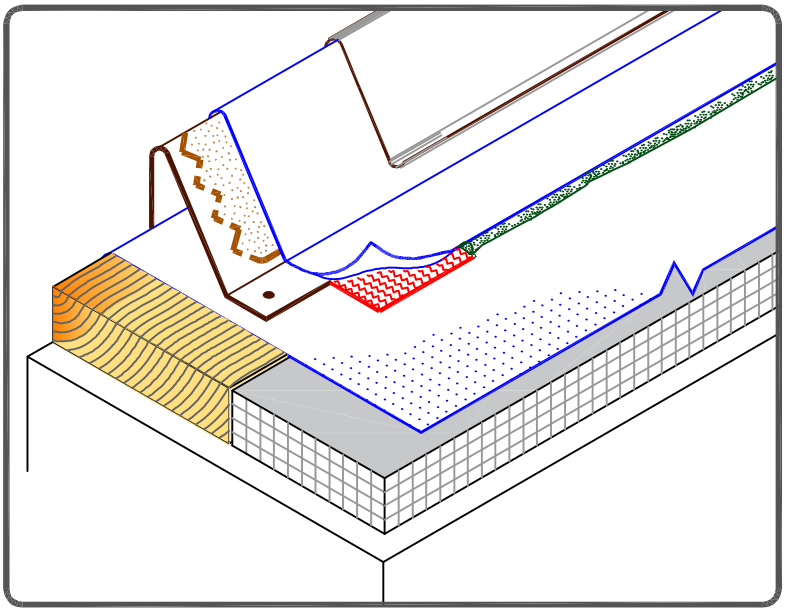

VERSICO ROOFING SYSTEMS
© 2024 VERSICO

VERSITRIM 200

MAXIMUM WARRANTY: 30 YEARS

TPO MEMBRANE
APPROVED SUBSTRATE
0 → SEE NOTE

PS (PRESSURE SENSITIVE)
P&S (PEEL & STICK)
QA (QUICK APPLIED)

THERMOPLASTIC ROOFING SYSTEM

TPC–1.4

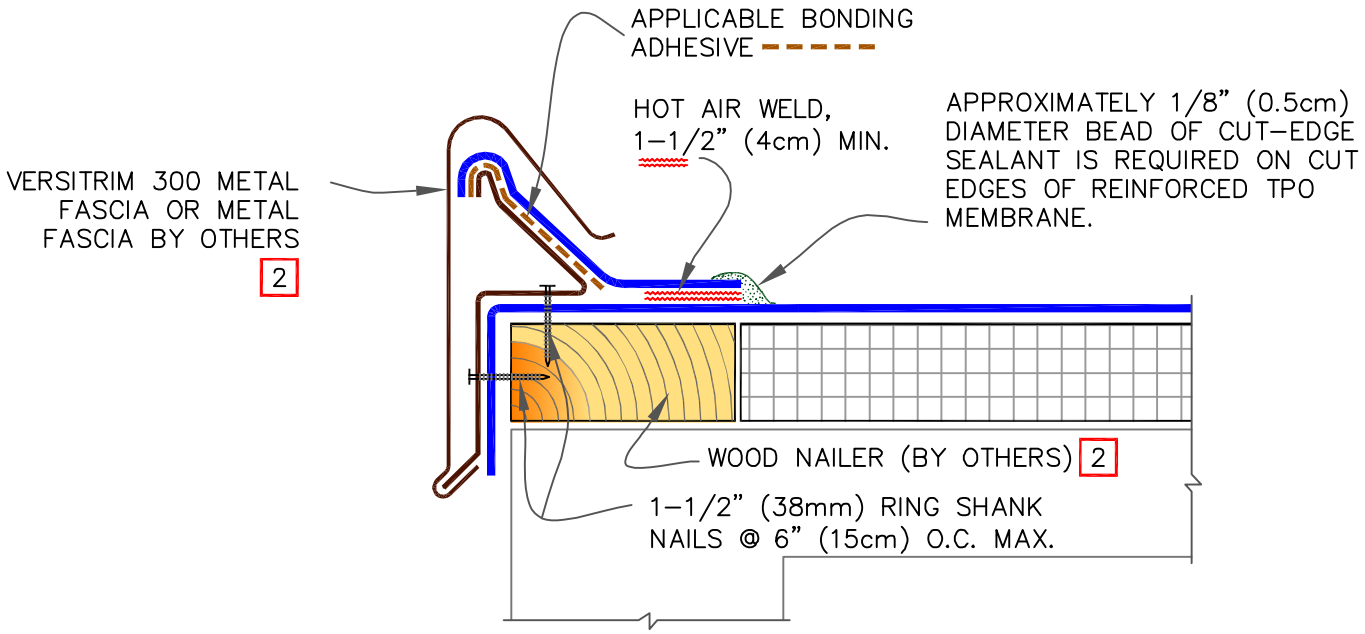

NOTES:

1. REFER TO VERSITRIM 300 INSTRUCTION MANUAL FOR STEP–BY–STEP INSTALLATION PROCEDURES.

2. WHEN METAL FASCIA BY OTHERS IS USED, FASTENER TYPE AND FASTENING FREQUENCY SHALL BE RECOMMENDED BY METAL EDGE MANUFACTURER.

VERSITRIM 300

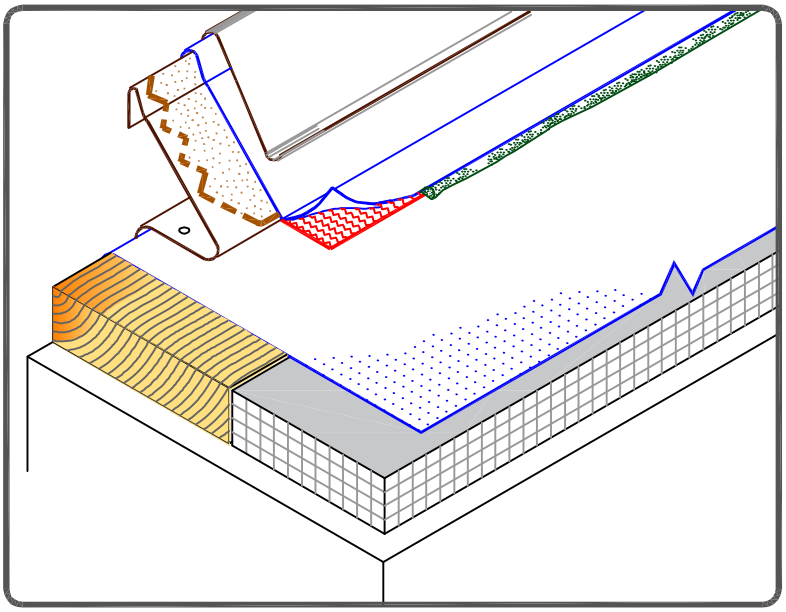

VERSICO ROOFING SYSTEMS
© 2024 VERSICO

VERSITRIM 300

MAXIMUM WARRANTY: 30 YEARS

TPO MEMBRANE
APPROVED SUBSTRATE
0 → SEE NOTE

PS (PRESSURE SENSITIVE)
P&S (PEEL & STICK)
QA (QUICK APPLIED)

THERMOPLASTIC ROOFING SYSTEM

TPC–1.5

VERSITRIM 2000

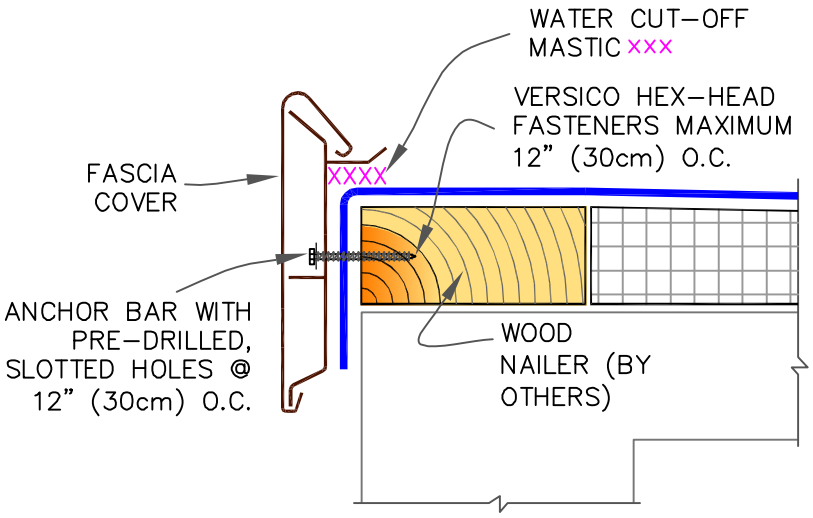

NOTES:

1. REFER TO VERSITRIM INSTALLATION INSTRUCTION MANUAL FOR THE STEP BY STEP INSTALLATION PROCEDURES AND FOR THE VARIOUS PRODUCT FEATURES AVAILABLE.
2. IF INCIDENTAL/TEMPORARY PONDED WATER IS EXPECTED, THE VERSITRIM MUST BE ELEVATED AND SCUPPERS PROVIDED FOR DRAINAGE.
3. ENSURE ROOF SLOPES AWAY FROM VERSITRIM.

VERSITRIM 3000

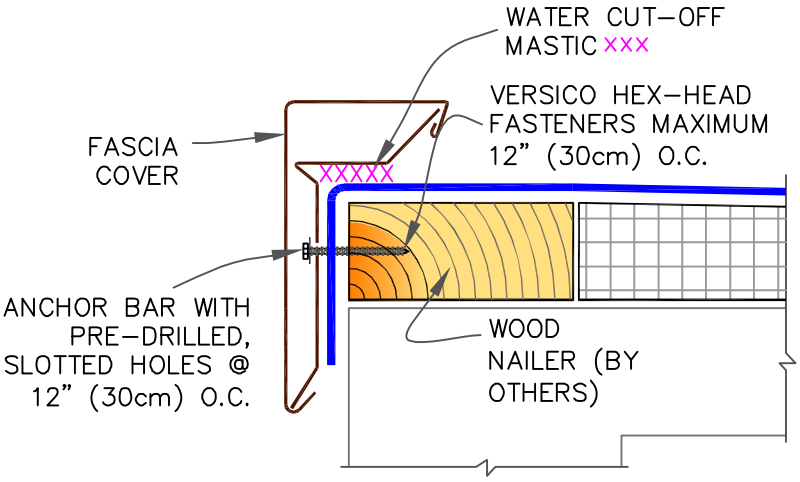

VERSITRIM ANCHOR BAR ADDITIONAL OPTION

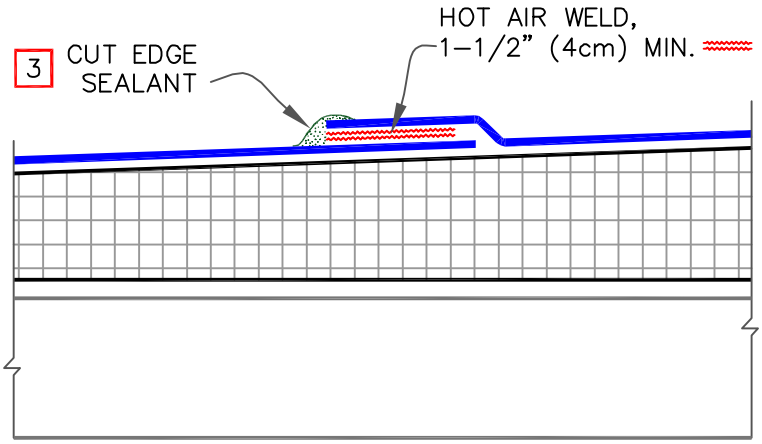

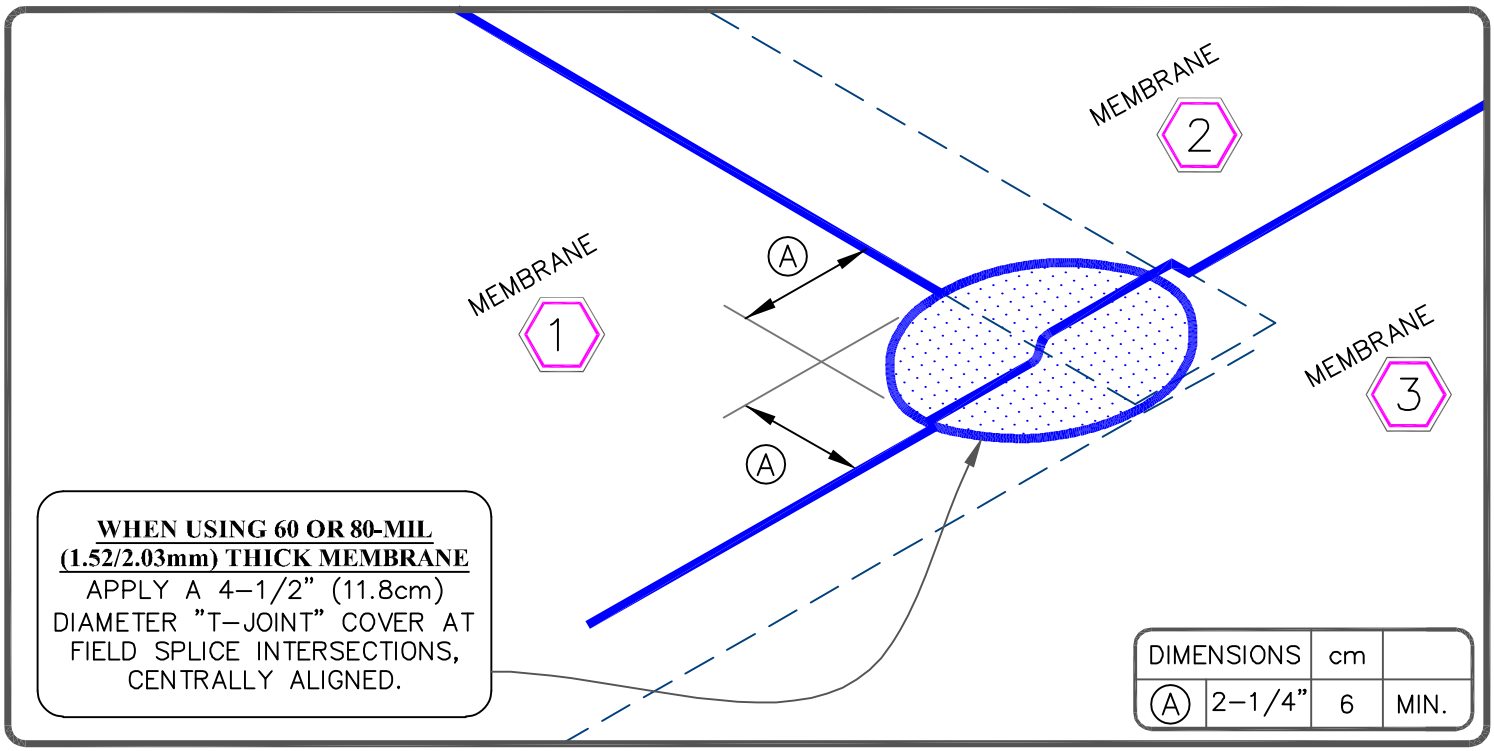

NOTES:

1. WHEN USING 60–MIL (1.52mm) MEMBRANE, MAXIMUM WARRANTY IS 20 YEARS.

2. APPROXIMATELY 1/8" (0.5cm) DIAMETER BEAD OF CUT–EDGE SEALANT IS REQUIRED ON CUT EDGES OF REINFORCED TPO MEMBRANE.

VERSICO ROOFING SYSTEMS
© 2024 VERSICO

TPO MEMBRANE SPLICE

MAXIMUM WARRANTY: 30 YEARS. SEE NOTE # 1.

TPO MEMBRANE
APPROVED SUBSTRATE
0 SEE NOTE

PS (PRESSURE SENSITIVE)
P&S (PEEL & STICK)
QA (QUICK APPLIED)

THERMOPLASTIC ROOFING SYSTEM

TPC–2.0

MEMBRANE SPLICE

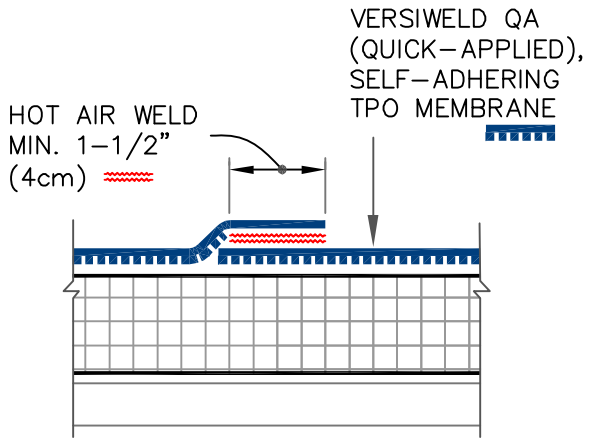

END LAP SPLICE

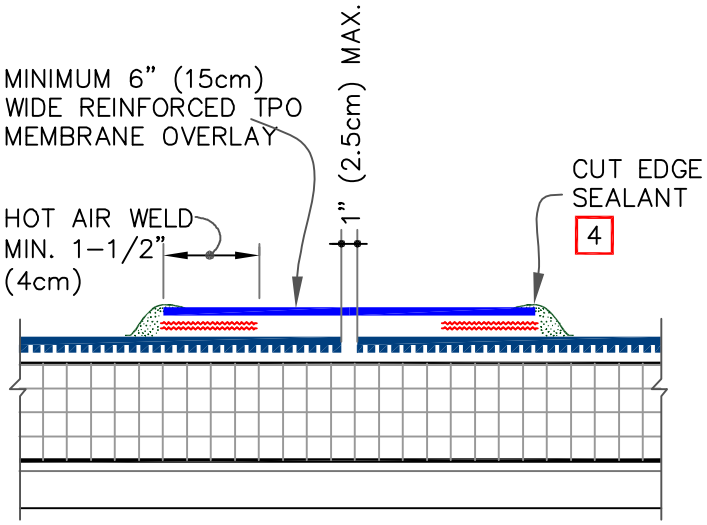

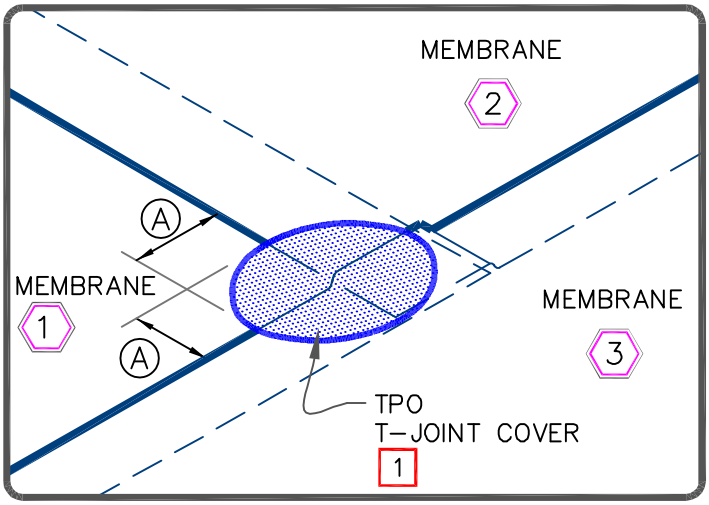

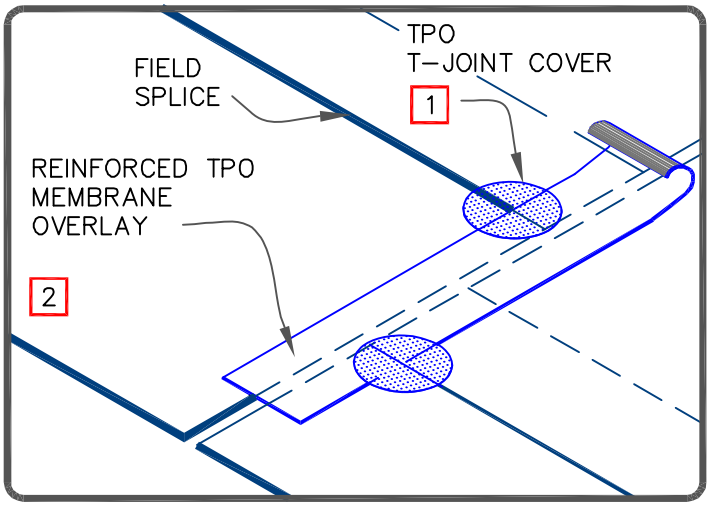

DIMENSION		cm
A	2–1/4"	6

NOTES:

1. WHEN USING QA TPO MEMBRANE, 60/80 MIL (1.52/2.03mm), APPLY A 4–1/2" (11cm) DIAMETER TPO "T–JOINT" COVER AT ALL FIELD SPLICE INTERSECTIONS.
2. WHEN USING 60/80 MIL (1.52/2.03mm) TPO REINFORCED MEMBRANE OVERLAY, INTERSECTIONS BETWEEN SPLICES MUST BE OVERLAID WITH A 4–1/2" (11cm) DIAMETER TPO "T–JOINT" COVER.
3. WHEN USING 60–MIL (1.52mm) TPO, MAXIMUM WARRANTY IS 20 YEARS.
4. APPROXIMATELY, 1/8" (0.5cm) DIAMETER BEAD OF CUT–EDGE SEALANT IS REQUIRED ON CUT EDGES OF REINFORCED TPO MEMBRANE.

VERSICO ROOFING SYSTEMS
© 2024 VERSICO

SELF–ADHERING TPO MEMBRANE SPLICE

MAXIMUM WARRANTY: 30 YEARS (SEE NOTE 3)

TPO MEMBRANE
APPROVED SUBSTRATE
0 → SEE NOTE

PS (PRESSURE SENSITIVE)
P&S (PEEL & STICK)
QA (QUICK APPLIED)

THERMOPLASTIC ROOFING SYSTEM

TPC–2.1

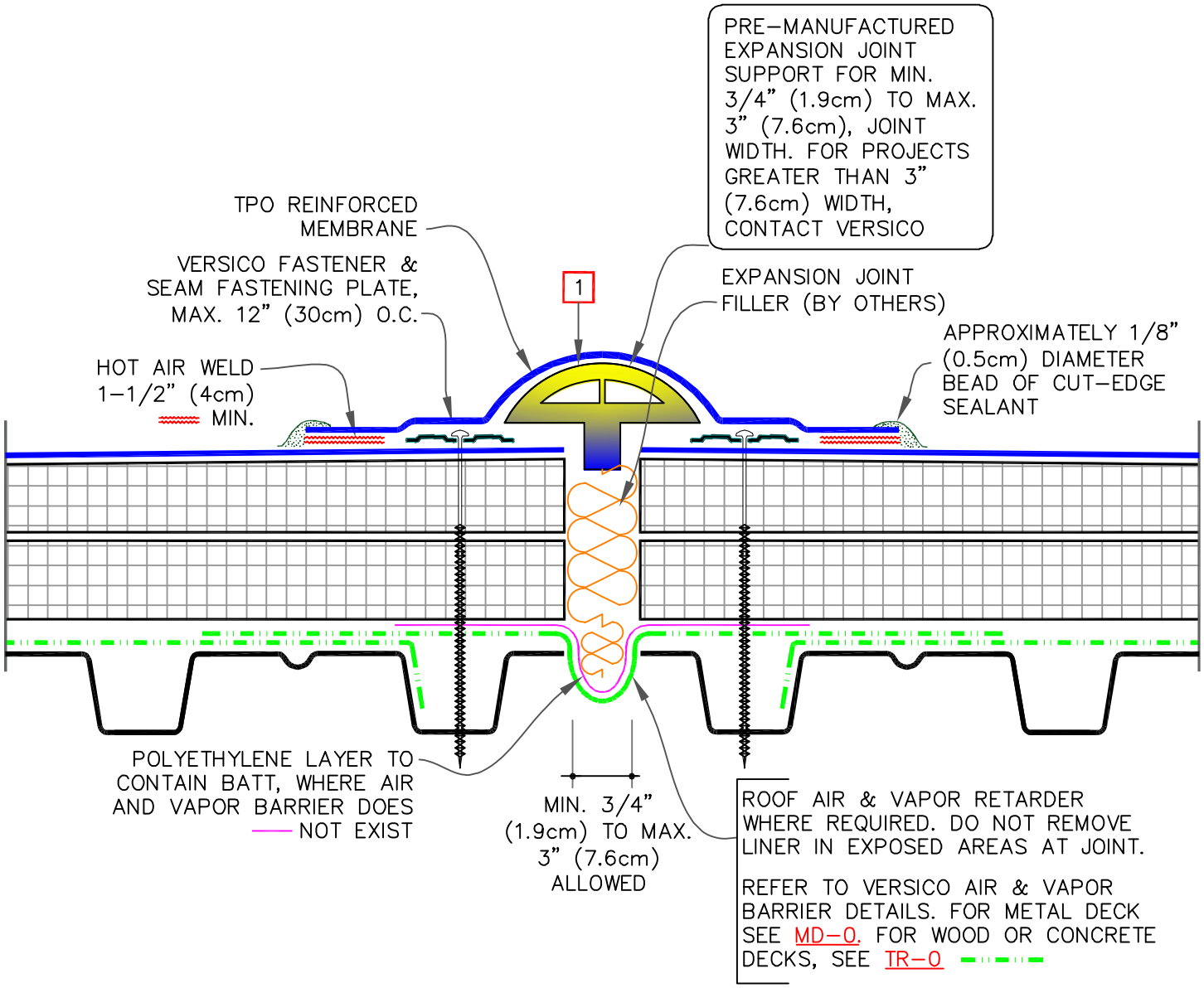

NOTES:

1. MEMBRANE FLASHING SHALL NOT BE ADHERED OVER THE EXPANSION JOINT SUPPORT.
2. WHEN THE EXPANSION JOINT INTERSECTS WITH A COATED METAL DRIP EDGE, THEN COATED METAL SHOULD BE GAPPED AND THE TPC–1.2 DETAIL BE FOLLOWED. DRIP EDGE BY OTHERS SHOULD ALSO BE GAPPED.

FASTENER & PRESSURE PLATE TYPES FOR DIFFERENT ROOF DECKS

DECK TYPE	OPTION	FASTENER	PLATE
STEEL OR WOOD	A	HPVX	HPVX
	B	HPV–XL	HPV–XL
STRUCTURAL CONCRETE	A	CD–10	HPVX
	B	MP 14–10	HPVX

VERSICO ROOFING SYSTEMS
© 2024 VERSICO

DECK–TO–DECK EXPANSION DETAIL

MAXIMUM WARRANTY: 30 YEARS

TPO MEMBRANE
APPROVED SUBSTRATE
0 → SEE NOTE
PS (PRESSURE SENSITIVE)
P&S (PEEL & STICK)
QA (QUICK APPLIED)

THERMOPLASTIC ROOFING SYSTEM

TPC–3.1

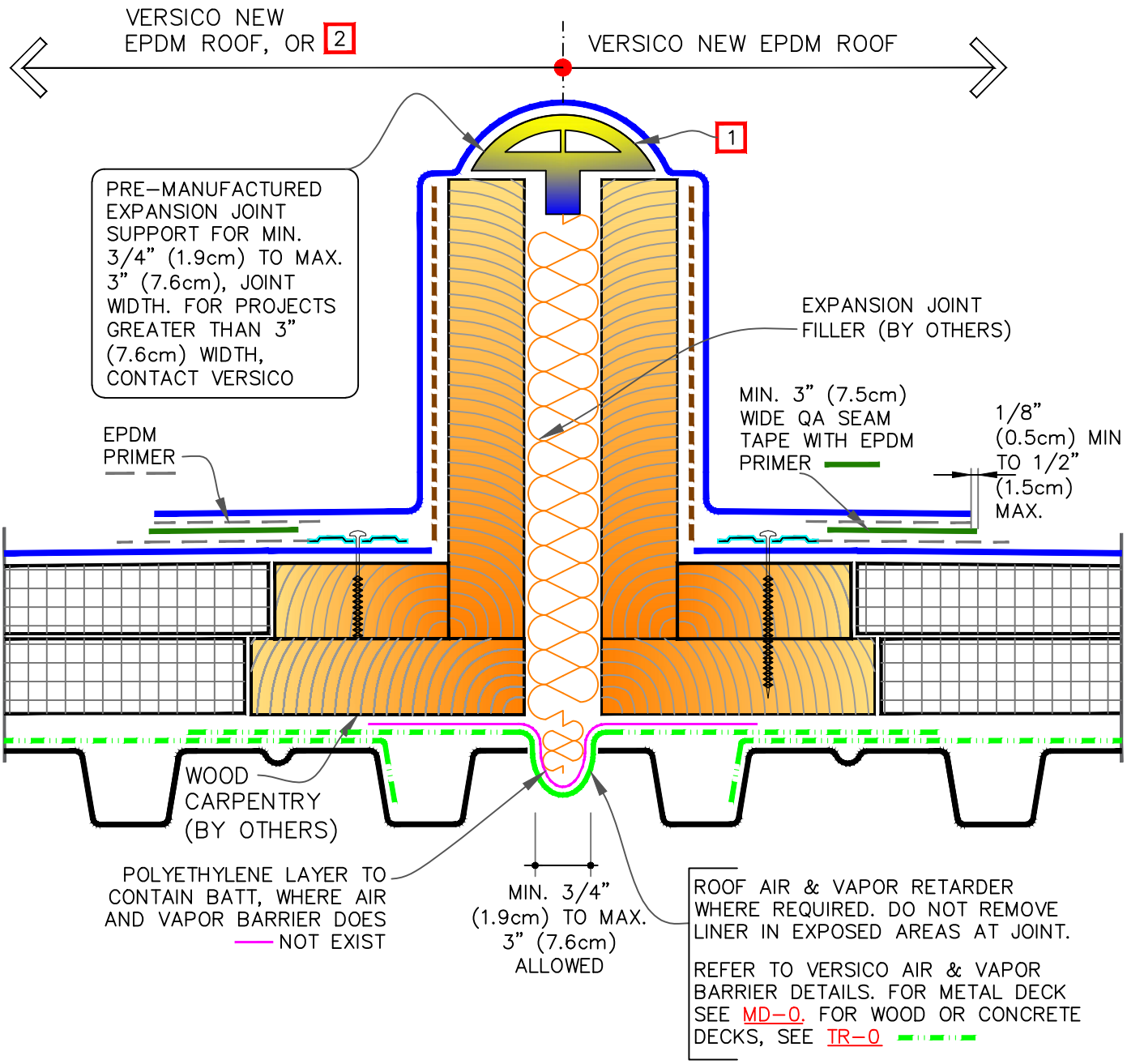

NOTES:

1. MEMBRANE FLASHING SHALL NOT BE ADHERED OVER THE EXPANSION JOINT SUPPORT.

2. IN CASE THE ROOF TYPE IS DIFFERENT, DESIGNER TO PROVIDE ROOF TYPE AND ITS CONDITION TO VERSICO TO DEVELOP A TIE-IN DETAIL ON THIS SIDE ACCORDINGLY.

MAXIMUM WARRANTY: 30 YEARS

VERSICO ROOFING SYSTEMS

© 2024 VERSICO

DECK-TO-DECK CURBED EXPANSION DETAIL

→ EPDM MEMBRANE
→ APPROVED SUBSTRATE
0 → SEE NOTE(S)

VersiGard COMMON DETAILS (EPDM)

VGC-3.1A

CAUTION

WHEN A WARRANTY WIND SPEED GREATER THAN 90MPH IS SPECIFIED, VERSICO FASTENER AND SEAM FASTENING PLATE SPACING SHALL NOT EXCEED 6" (15cm) ON CENTER FOR ADHERED MEMBRANE ASSEMBLIES.

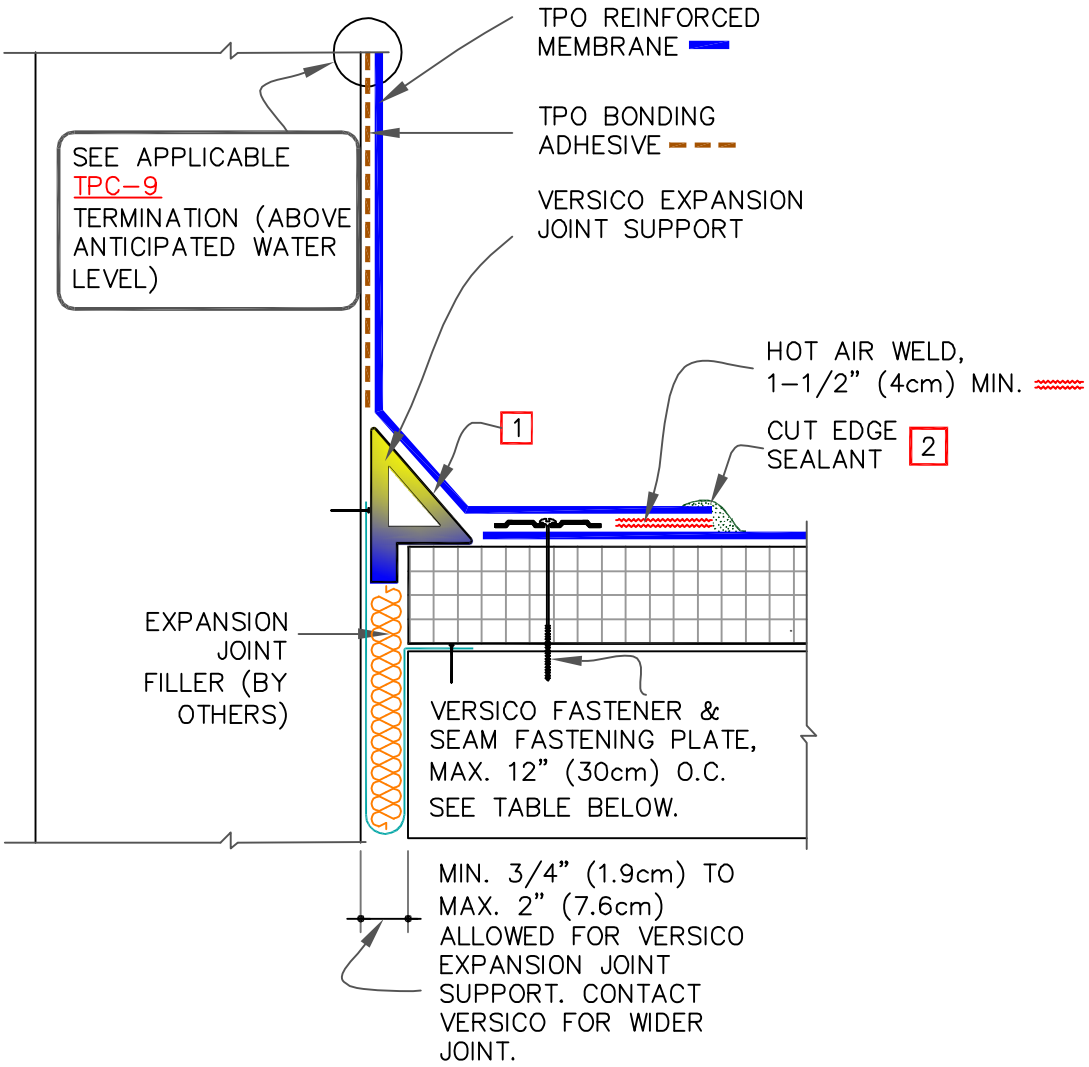

NOTES:

1. MEMBRANE FLASHING SHALL NOT BE ADHERED OVER THE EXPANSION JOINT SUPPORT OR SPONGE TUBING.

2. APPROXIMATELY 1/8" (0.5cm) DIAMETER BEAD OF CUT–EDGE SEALANT IS REQUIRED ON CUT EDGES OF REINFORCED TPO MEMBRANE. PLATES.

FASTENER & PRESSURE PLATE TYPES FOR DIFFERENT ROOF DECKS

DECK TYPE	OPTION	FASTENER	PLATE
STEEL OR WOOD	A	HPVX	HPVX
	B	HPV–XL	HPV–XL
STRUCTURAL CONCRETE	A	CD–10	HPVX
	B	MP 14–10	HPVX

VERSICO ROOFING SYSTEMS
© 2024 VERSICO

DECK–TO–WALL EXPANSION DETAIL

MAXIMUM WARRANTY: 30 YEARS

TPO MEMBRANE
APPROVED SUBSTRATE
0 → SEE NOTE

PS (PRESSURE SENSITIVE)
P&S (PEEL & STICK)
QA (QUICK APPLIED)

THERMOPLASTIC ROOFING SYSTEM

TPC–3.2

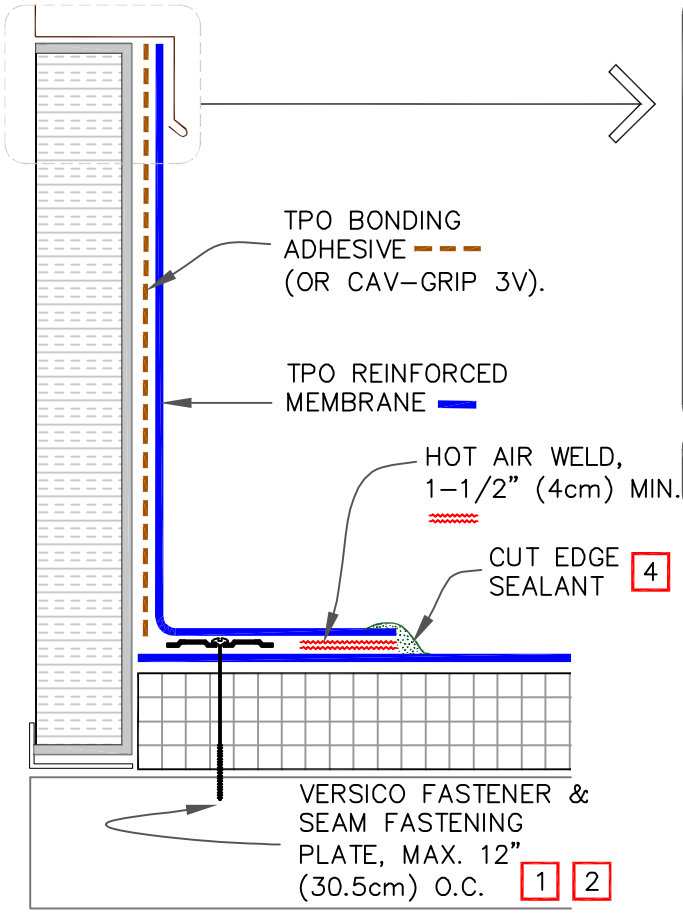

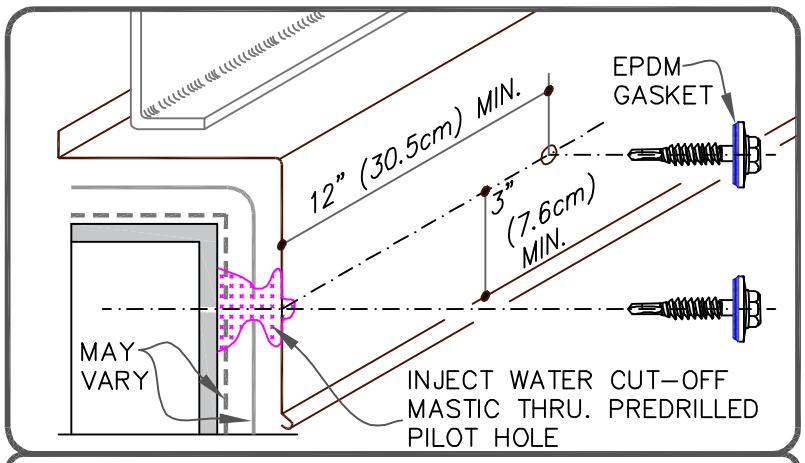

COUNTER FLASHING WITH WATERPROOF JOINERY & ATTACHMENT (BY OTHERS)

NOTES:

1. REFER TO VERSICO SPECIFICATIONS FOR ACCEPTABLE VERSICO FASTENERS AND PLATES.
2. MECHANICAL SECUREMENT MAY BE INSTALLED INTO THE VERTICAL SUBSTRATE.
3. WHEN USING 80 MIL (2.03mm) THICK CURB FLASHING, THE INTERSECTIONS BETWEEN SPLICES MUST OVERLAID WITH A TPO "T-JOINT" COVER.
4. APPROXIMATELY 1/8" (0.5cm) DIAMETER BEAD OF CUT-EDGE SEALANT IS REQUIRED ON CUT EDGES OF REINFORCED TPO MEMBRANE.

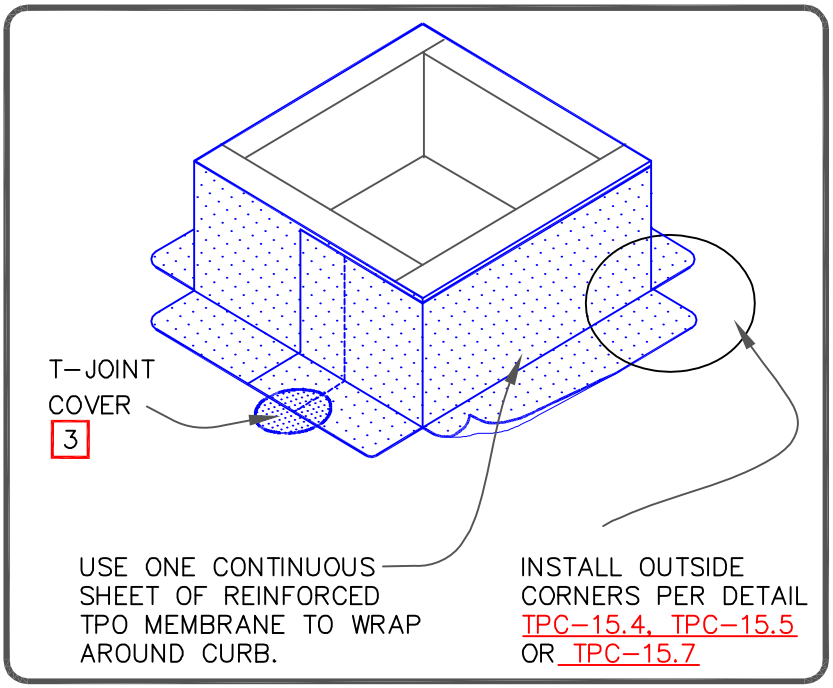

VERSICO ROOFING SYSTEMS

© 2024 VERSICO

CURB FLASHING WITH TPO MEMBRANE

MAXIMUM WARRANTY: 30 YEARS

TPO MEMBRANE
APPROVED SUBSTRATE
0 → SEE NOTE

PS (PRESSURE SENSITIVE)
P&S (PEEL & STICK)
QA (QUICK APPLIED)

THERMOPLASTIC ROOFING SYSTEM

TPC-5.1

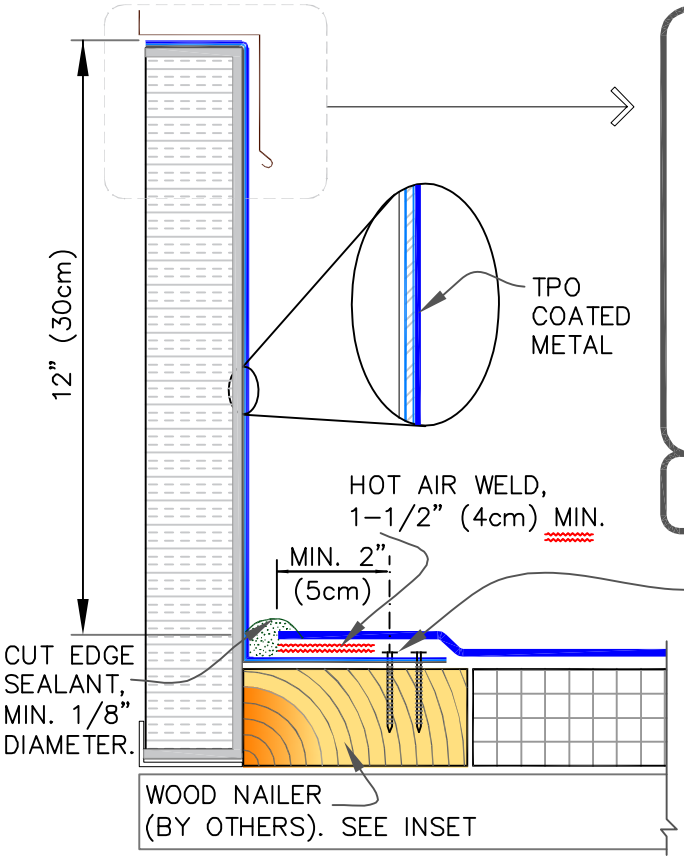

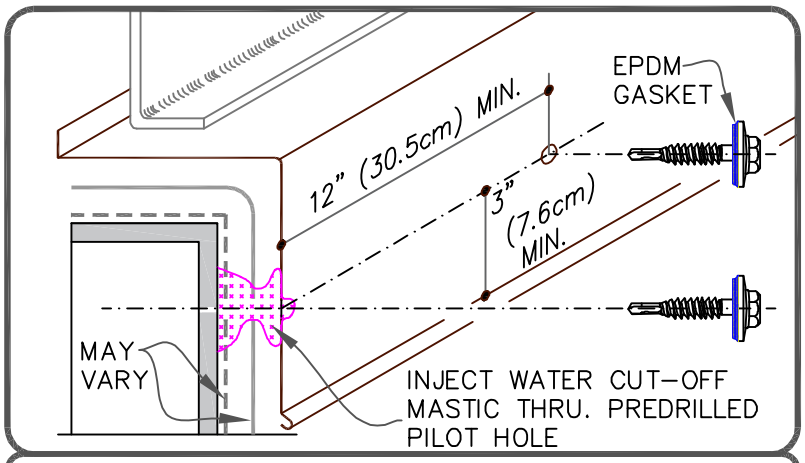

COUNTER FLASHING WITH WATERPROOF JOINERY & ATTACHMENT (BY OTHERS)

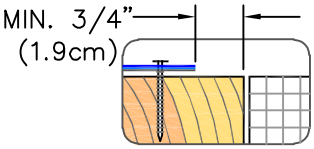

SEQUENCE:

1. 3" (7.6cm) REINFORCED MEMBRANE STRIPPING.
2. FIELD MEMBRANE.
3. TOP 6" (15.2cm) NON–REINFORCED MEMBRANE STRIPPING.

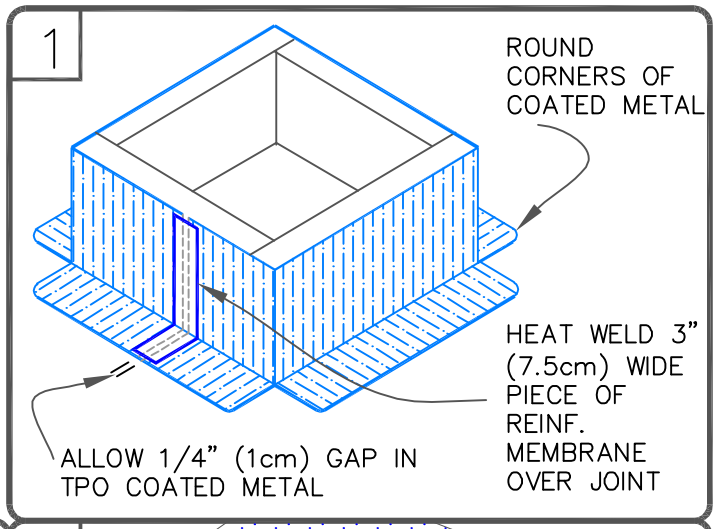

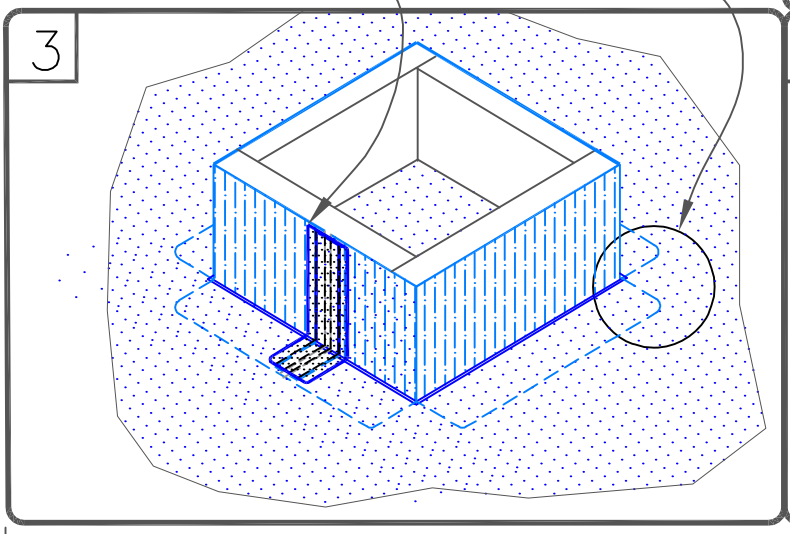

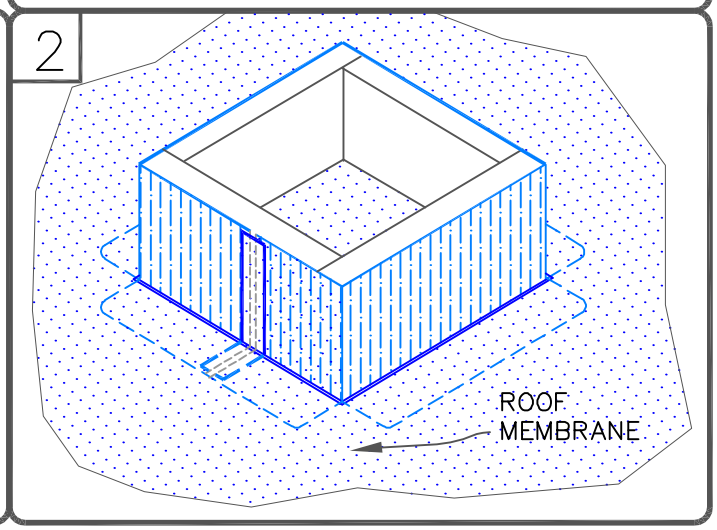

VERSICO ROOFING SYSTEMS

© 2024 VERSICO

CURB FLASHING WITH TPO COATED METAL

MAXIMUM WARRANTY: 30 YEARS

TPO MEMBRANE
APPROVED SUBSTRATE
0 → SEE NOTE

PS (PRESSURE SENSITIVE)
P&S (PEEL & STICK)
QA (QUICK APPLIED)

THERMOPLASTIC ROOFING SYSTEM

TPC–5.2

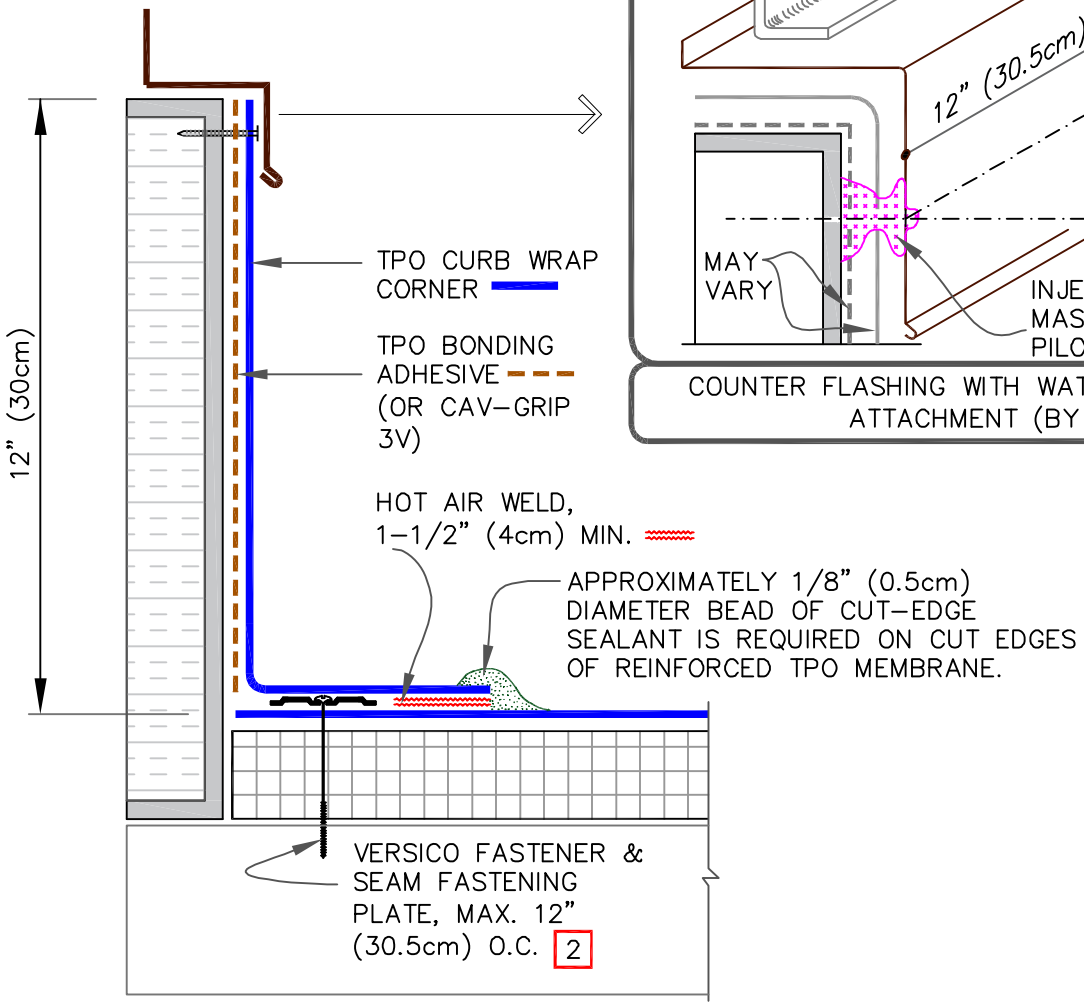

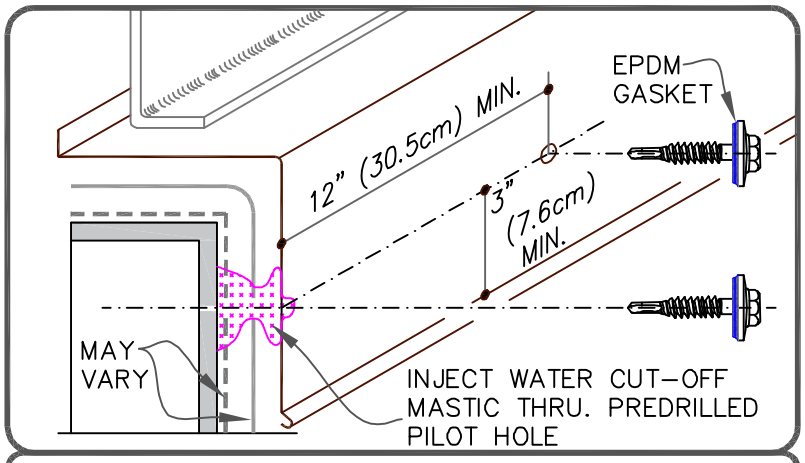

COUNTER FLASHING WITH WATERPROOF JOINERY & ATTACHMENT (BY OTHERS)

NOTES:

1. FOUR (4) CURB WRAP CORNERS WILL COMPLETELY FLASH A MAXIMUM CURB SIZE OF 3'X3' (91cmX 91cm). FOR LARGER CURBS USE THE TPO CURB WRAP CORNERS IN CONJUNCTION WITH ADDITIONAL SECTIONS OF VERSIWELD TPO MEMBRANE.

2. REFER TO VERSICO SPECIFICATIONS FOR ACCEPTABLE VERSICO FASTENERS AND PLATES.

3. CUSTOM SIZES ARE AVAILABLE FOR CURB FLASHING HEIGHTS GREATER THAN 12" (30cm).

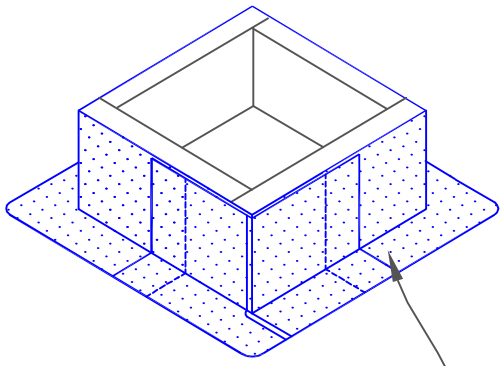

USE ONE TPO CURB WRAP CORNER AT EACH CORNER OF THE CURB. HOT AIR WELD ALL SEAMS IN ACCORDANCE WITH STANDARD SPLICING METHODS. 1

VERSICO ROOFING SYSTEMS
© 2024 VERSICO

CURB FLASHING WITH CFA
TPO CURB WRAP CORNERS

MAXIMUM WARRANTY: 30 YEARS

TPO MEMBRANE
APPROVED SUBSTRATE
0 → SEE NOTE

PS (PRESSURE SENSITIVE)
P&S (PEEL & STICK)
QA (QUICK APPLIED)

THERMOPLASTIC ROOFING SYSTEM

TPC-5.3

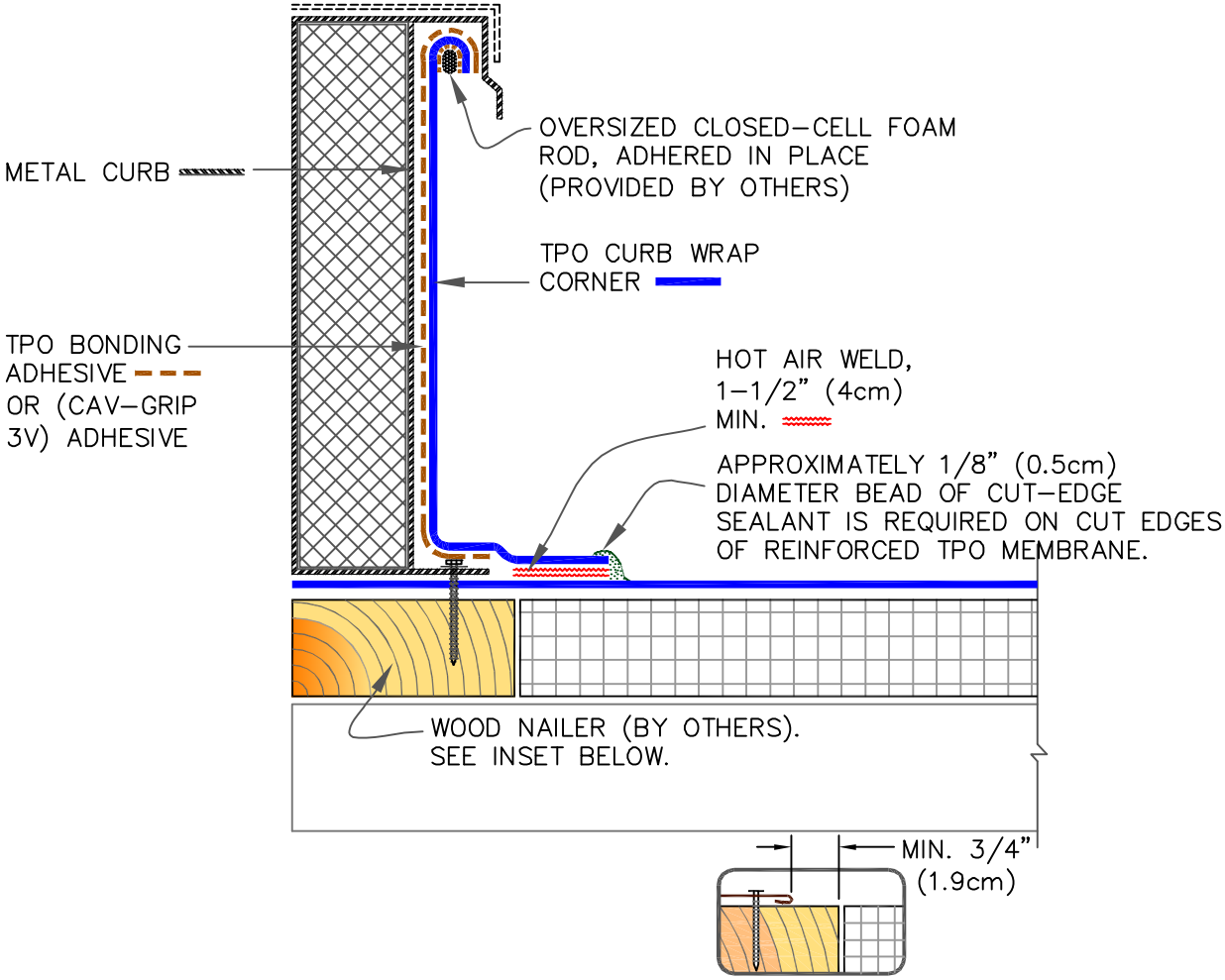

NOTES:

1. FOUR (4) CURB WRAP CORNERS WILL COMPLETELY FLASH A MAXIMUM CURB SIZE OF 3'X3' (90cmX 90cm). FOR LARGER CURBS USE THE TPO CURB WRAP CORNERS IN CONJUNCTION WITH ADDITIONAL SECTIONS OF VERSIWELD TPO.
2. IF CURB WRAP CORNER IS NOT USED, THEN USE DETAIL TPC–15.7 FOR OUTSIDE CORNERS.
3. REFER TO VERSICO SPECIFICATIONS FOR ACCEPTABLE VERSICO FASTENERS AND PLATES.
4. CUSTOM SIZES ARE AVAILABLE FOR CURB FLASHING HEIGHTS GREATER THAN 12" (30cm).

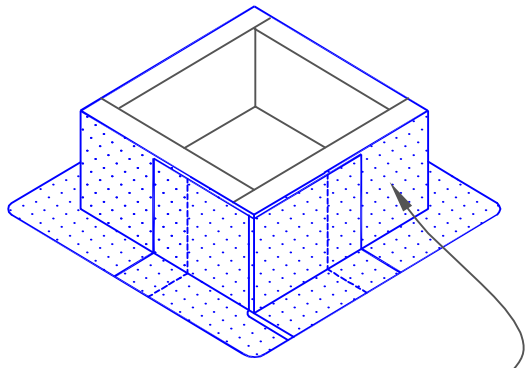

USE ONE TPO CURB WRAP CORNER AT EACH CORNER OF THE CURB. HOT AIR WELD ALL SEAMS IN ACCORDANCE WITH STANDARD SPLICING METHODS. 2

VERSICO ROOFING SYSTEMS
© 2024 VERSICO

SELF–FLASHING CURB

MAXIMUM WARRANTY: 30 YEARS

TPO MEMBRANE
APPROVED SUBSTRATE
0 → SEE NOTE

PS (PRESSURE SENSITIVE)
P&S (PEEL & STICK)
QA (QUICK APPLIED)

THERMOPLASTIC ROOFING SYSTEM

TPC–5.4

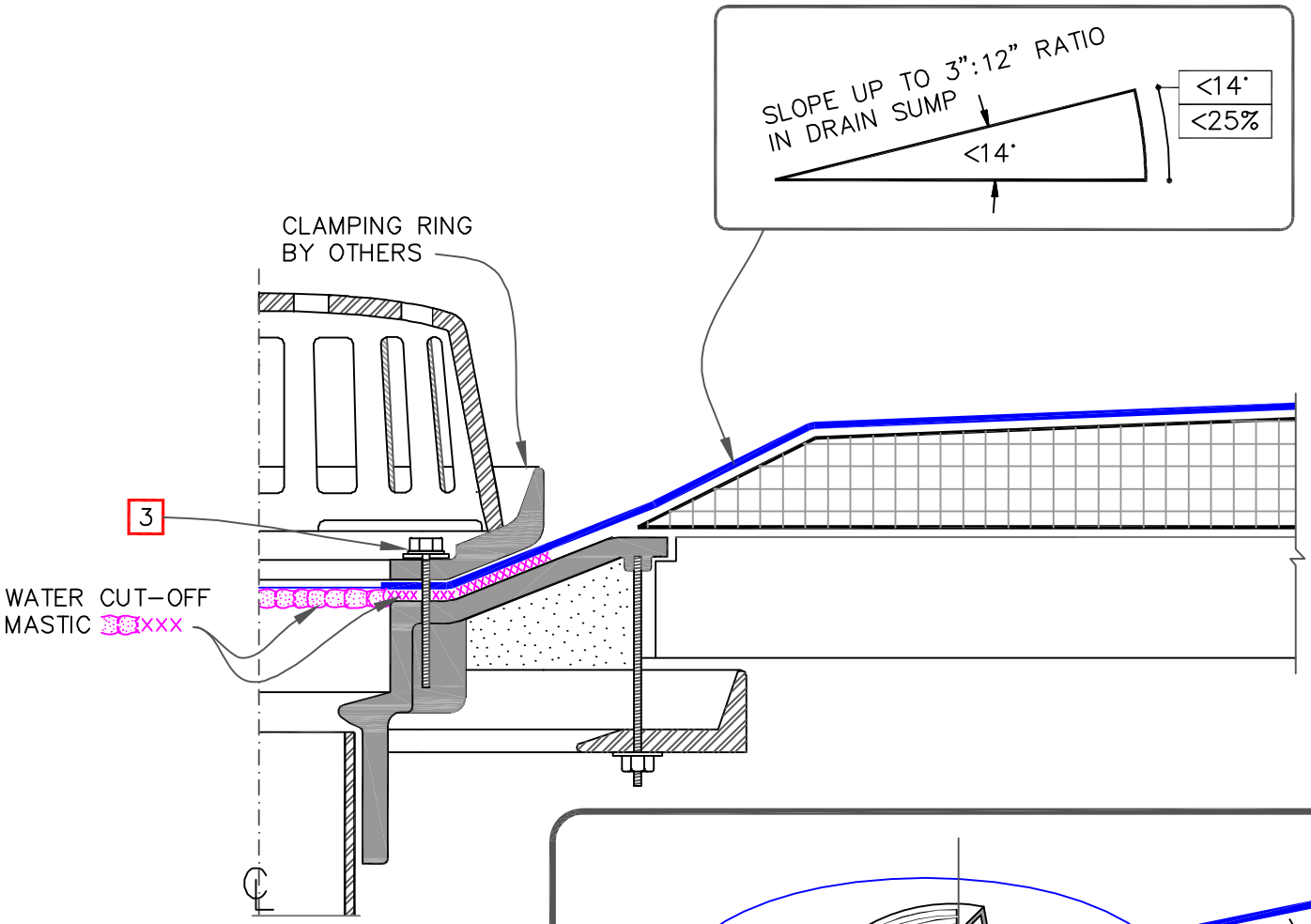

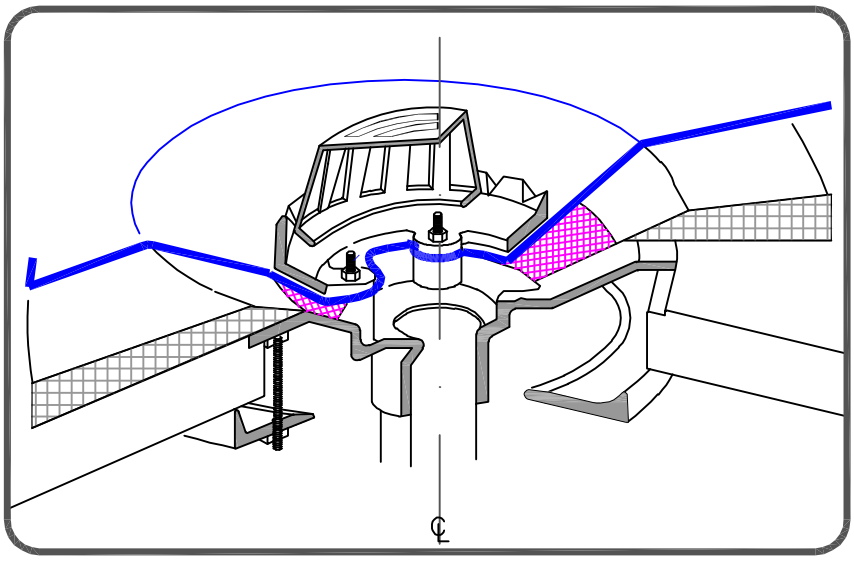

NOTES:

1. ROOF DRAIN SIZE AND NUMBER OF DRAINS SHALL BE IN ACCORDANCE WITH THE LOCAL CODES.

2. THE HOLE IN THE MEMBRANE SHALL EXCEED THE DIAMETER OF THE DRAIN PIPE, BUT SHALL BE NO LESS THAN 1/2" (1.5cm) FROM THE ATTACHMENT POINTS OF THE DRAIN CLAMPING RING.

3. ALL BOLTS OR CLAMPS MUST BE IN PLACE TO PROVIDE CONSTANT COMPRESSION ON WATER CUT-OFF MASTIC.

4. REMOVE EXISTING LEAD, FLASHING MATERIAL & ENSURE THE DRAIN RING IS COMPLETELY CLEAN DOWN TO BARE METAL.

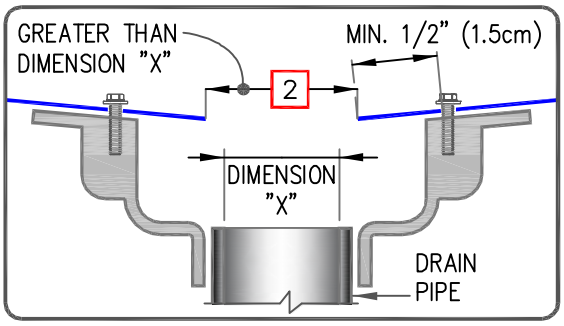

VERSICO ROOFING SYSTEMS
© 2024 VERSICO

ROOF DRAIN: SUMP SLOPE LESS THAN 3" TO 12"

MAXIMUM WARRANTY: 30 YEARS

TPO MEMBRANE
APPROVED SUBSTRATE
0 → SEE NOTE
PS (PRESSURE SENSITIVE)
P&S (PEEL & STICK)
QA (QUICK APPLIED)

THERMOPLASTIC ROOFING SYSTEM

TPC-6.1

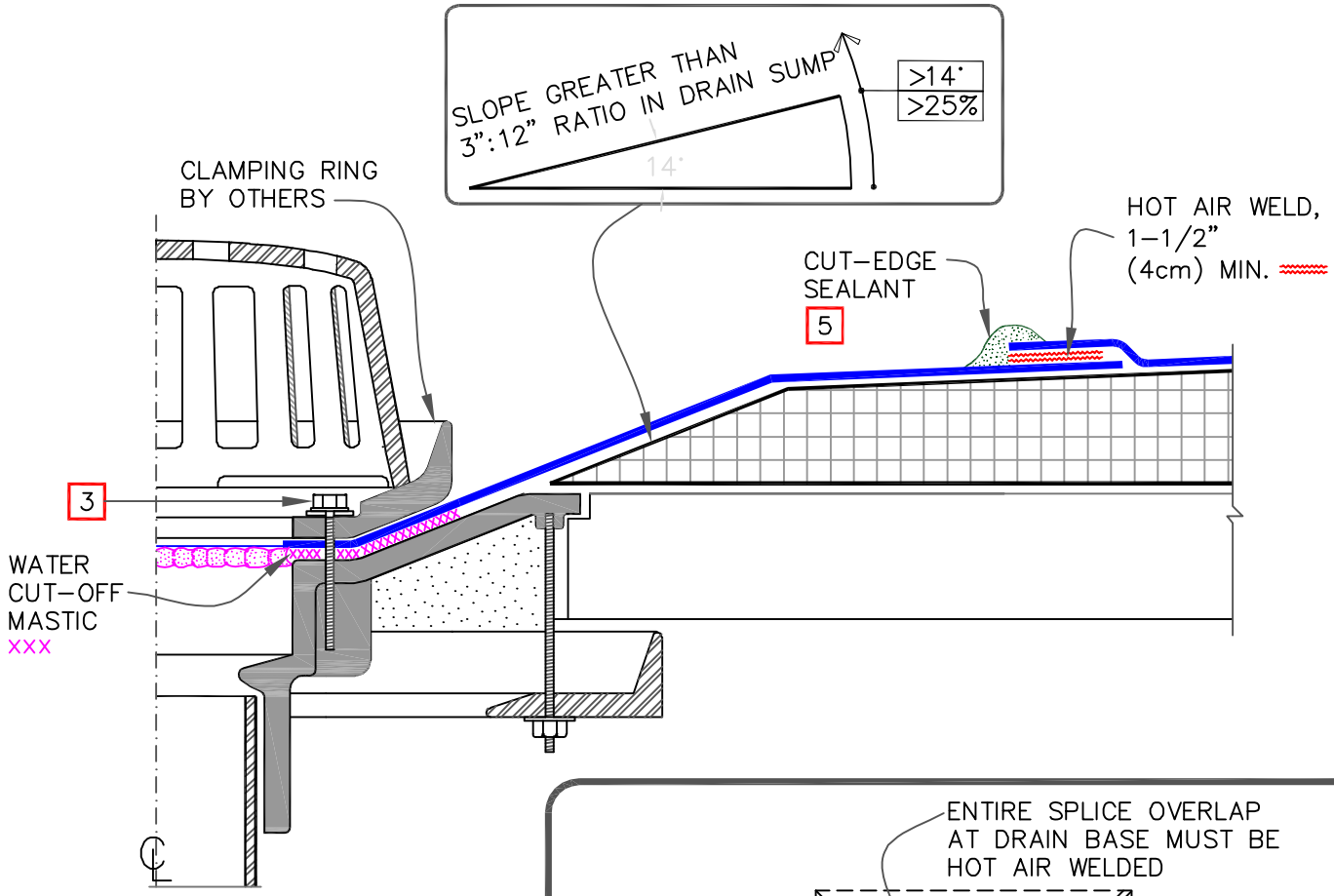

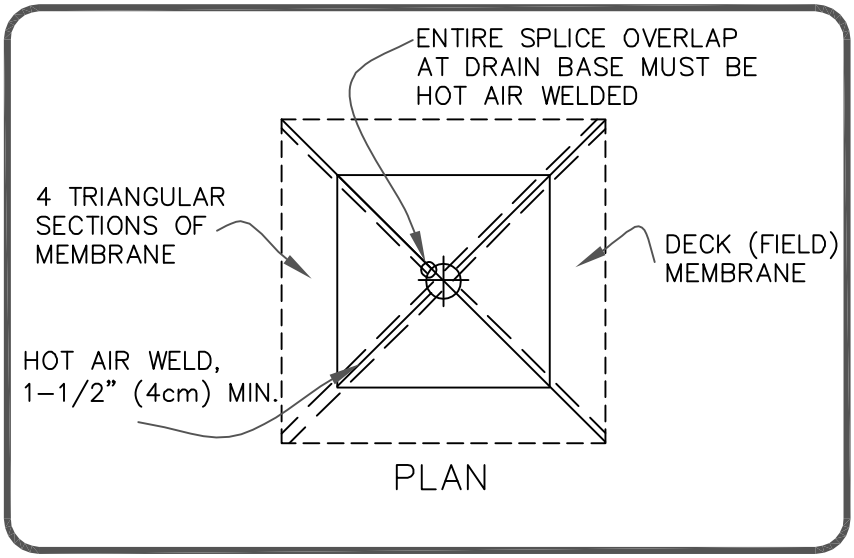

NOTES:

1. ROOF DRAIN SIZE AND NUMBER OF DRAINS SHALL BE IN ACCORDANCE WITH THE LOCAL CODES.

2. THE HOLE IN THE MEMBRANE SHALL EXCEED THE DIAMETER OF THE DRAIN PIPE, BUT SHALL BE NO LESS THAN 1/2" (1.5cm) FROM THE ATTACHMENT POINTS OF THE DRAIN CLAMPING RING.

3. ALL BOLTS OR CLAMPS MUST BE IN PLACE TO PROVIDE CONSTANT COMPRESSION ON WATER CUT–OFF MASTIC.

4. REMOVE EXISTING LEAD, FLASHING MATERIAL & ENSURE THE DRAIN RING IS COMPLETELY CLEAN DOWN TO BARE METAL.

5. APPROXIMATELY 1/8" (0.5cm) DIAMETER BEAD OF CUT–EDGE SEALANT IS REQUIRED ON CUT EDGES OF REINFORCED TPO MEMBRANE.

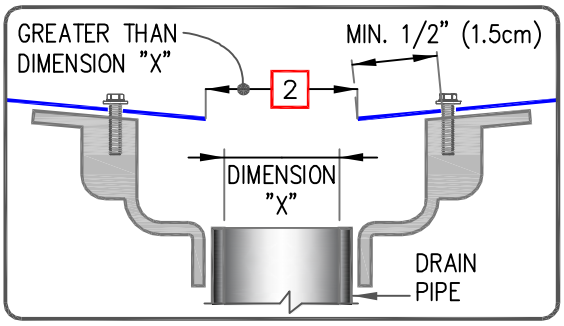

VERSICO ROOFING SYSTEMS
© 2024 VERSICO

ROOF DRAIN: SUMP SLOPE GREATER THAN 3" TO 12" OPTION 1

MAXIMUM WARRANTY: 30 YEARS

TPO MEMBRANE
APPROVED SUBSTRATE
0 → SEE NOTE

PS (PRESSURE SENSITIVE)
P&S (PEEL & STICK)
QA (QUICK APPLIED)

THERMOPLASTIC ROOFING SYSTEM

TPC–6.2

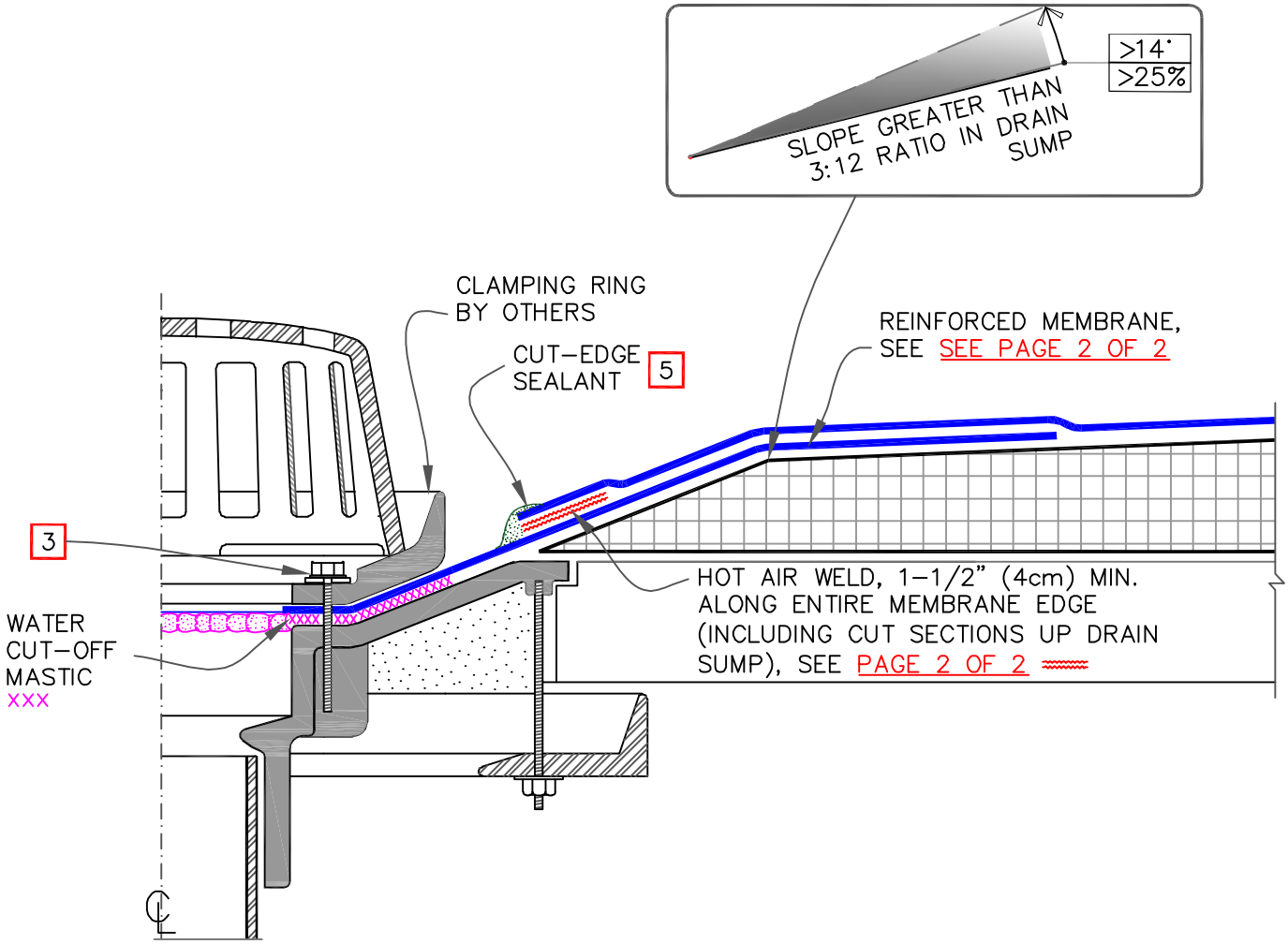

NOTES:

1. ROOF DRAIN SIZE AND NUMBER OF DRAINS SHALL BE IN ACCORDANCE WITH THE LOCAL CODES.

2. THE HOLE IN THE MEMBRANE SHALL EXCEED THE DIAMETER OF THE DRAIN PIPE, BUT SHALL BE NO LESS THAN 1/2" (1.5cm) FROM THE ATTACHMENT POINTS OF THE DRAIN CLAMPING RING.

3. ALL BOLTS OR CLAMPS MUST BE IN PLACE TO PROVIDE CONSTANT COMPRESSION ON WATER CUT-OFF MASTIC.

4. REMOVE EXISTING LEAD, FLASHING MATERIAL & ENSURE THE DRAIN RING IS COMPLETELY CLEAN DOWN TO BARE METAL.

5. APPROXIMATELY 1/8" (0.5cm) DIAMETER BEAD OF CUT-EDGE SEALANT IS REQUIRED ON CUT EDGES OF REINFORCED TPO MEMBRANE.

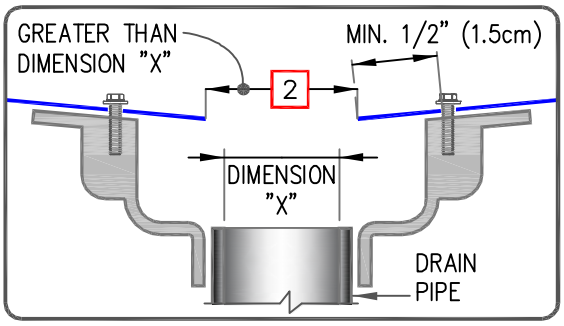

VERSICO ROOFING SYSTEMS
© 2024 VERSICO

ROOF DRAIN: SUMP SLOPE GREATER THAN 3" TO 12" OPTION 2 (PAGE 1 OF 2)

MAXIMUM WARRANTY: 30 YEARS

TPO MEMBRANE
APPROVED SUBSTRATE
0 → SEE NOTE

PS (PRESSURE SENSITIVE)
P&S (PEEL & STICK)
QA (QUICK APPLIED)

THERMOPLASTIC ROOFING SYSTEM

TPC-6.3

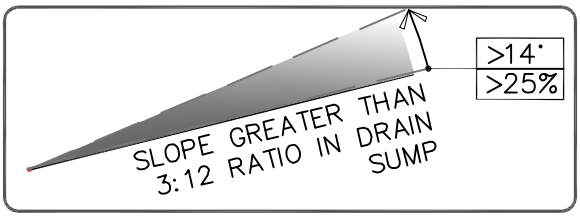

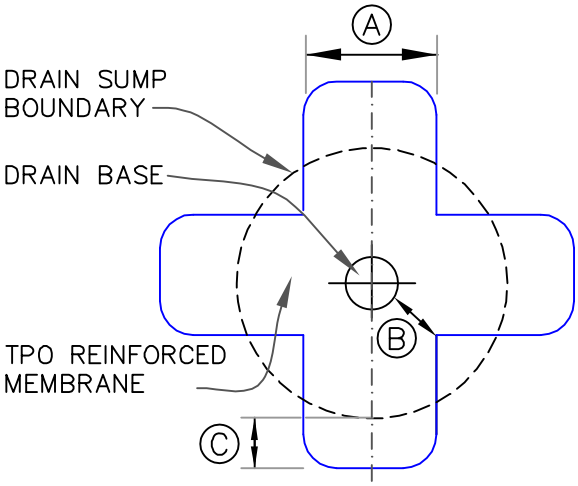

CUT SECTION OF TPO REINFORCED MEMBRANE AS SHOWN AND POSITION INTO DRAIN SUMP. EXTEND MEMBRANE OUT OF DRAIN SUMP APPROXIMATELY 6" (15cm) (ROUND CORNERS).

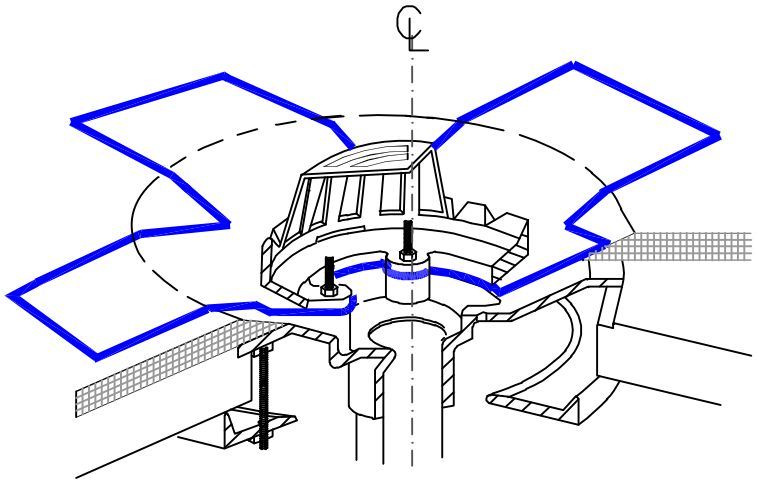

EXTEND TPO MEMBRANE ONTO MEMBRANE SECTION POSITIONED AT DRAIN SUMP AND CUT AS SHOWN TO LAY FLAT IN SUMP. HOT AIR WELD A MINIMUM OF 1–1/2" (4cm) COMPLETELY SURROUNDING AREA.

DIMENSIONS		cm	
A	12"	30	MIN.
B	6"	15	MIN.
C	6"	15	APPROX.
D	3"	7.5	MIN.

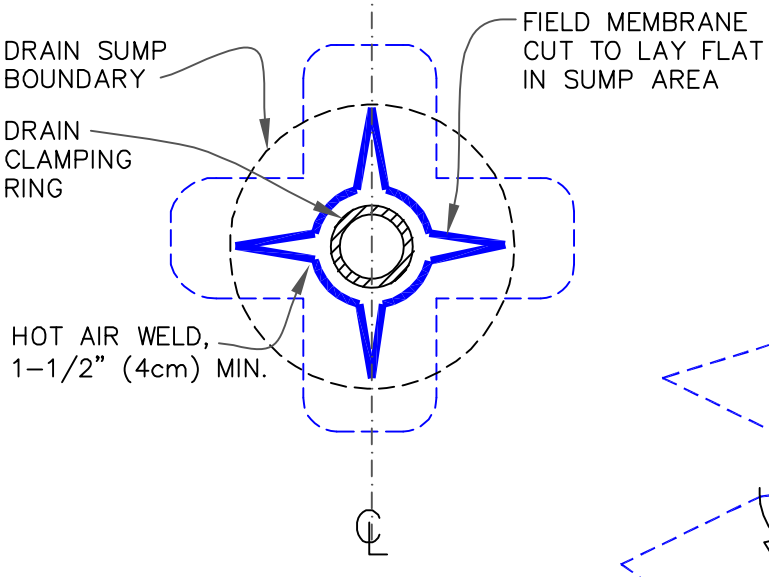

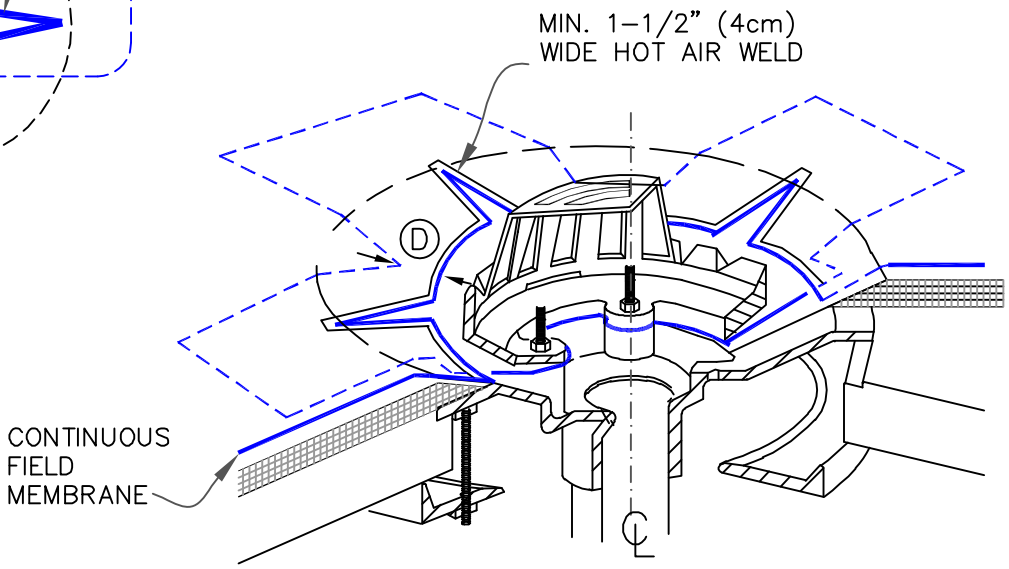

VERSICO ROOFING SYSTEMS
© 2024 VERSICO

ROOF DRAIN: SUMP SLOPE GREATER THAN 3" TO 12" OPTION 2 (PAGE 2 OF 2)

MAXIMUM WARRANTY: 30 YEARS

TPO MEMBRANE
APPROVED SUBSTRATE
0 SEE NOTE

PS (PRESSURE SENSITIVE)
P&S (PEEL & STICK)
QA (QUICK APPLIED)

THERMOPLASTIC ROOFING SYSTEM

TPC–6.3

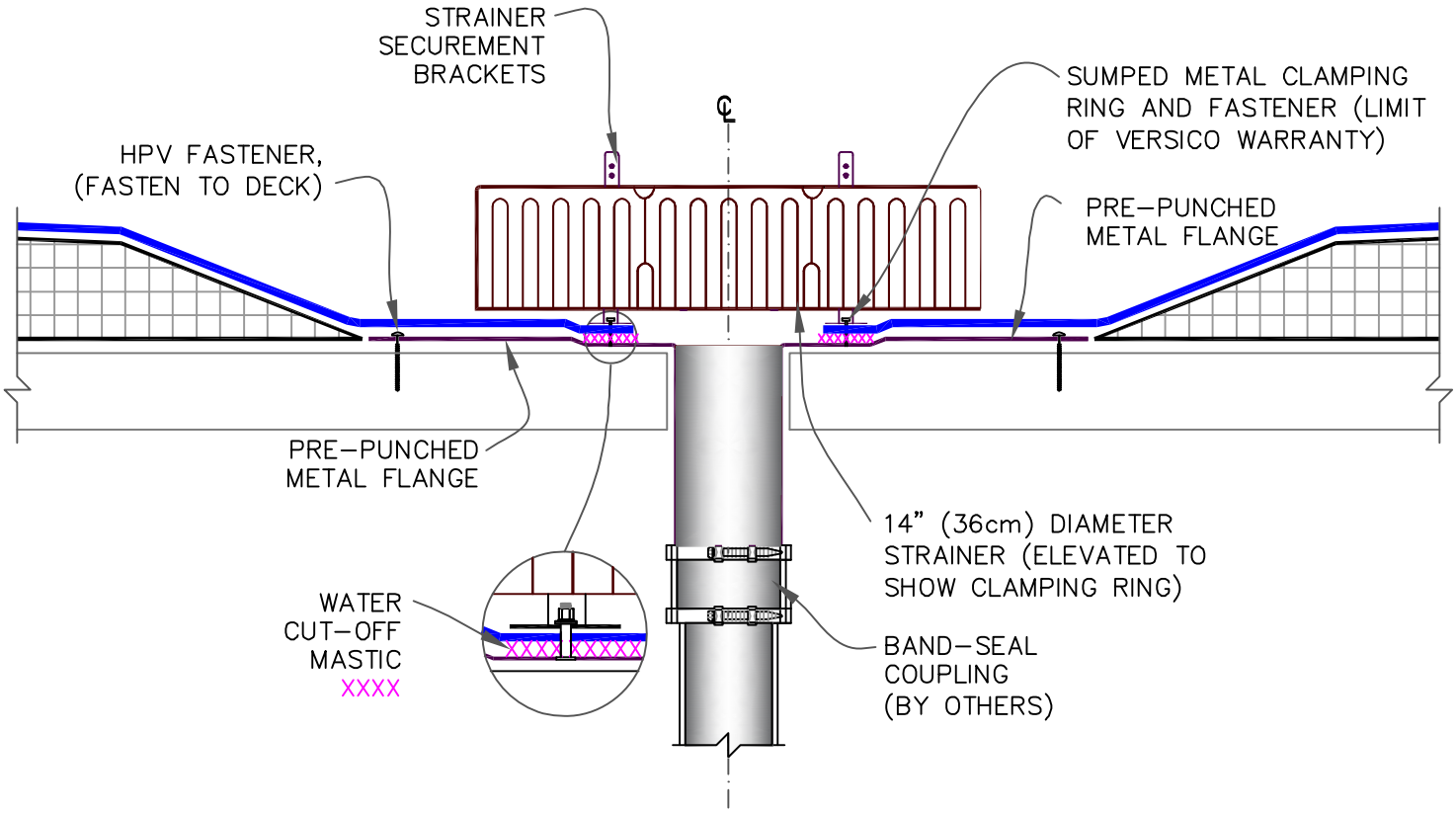

NOTES:

1. ROOF DRAIN SIZE AND NUMBER OF DRAINS SHALL BE IN ACCORDANCE WITH THE LOCAL CODES.
2. ALL BOLTS OR CLAMPS MUST BE IN PLACE TO PROVIDE CONSTANT COMPRESSION ON WATER CUT-OFF MASTIC.
3. FIELD SPLICES MUST BE LOCATED AT LEAST 6" (15cm) OUTSIDE THE DRAIN SUMP.
4. INSULATION TAPER SHALL NOT BE GREATER THAN 6" (15cm) IN 12" (30cm) HORIZONTAL.

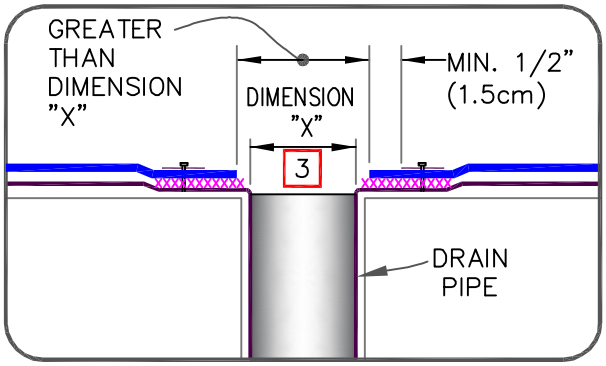

VERSICO ROOFING SYSTEMS
© 2024 VERSICO

ADD-ON DRAIN

MAXIMUM WARRANTY: 30 YEARS

TPO MEMBRANE
APPROVED SUBSTRATE
0 SEE NOTE

PS (PRESSURE SENSITIVE)
P&S (PEEL & STICK)
QA (QUICK APPLIED)

THERMOPLASTIC ROOFING SYSTEM

TPC-6.4

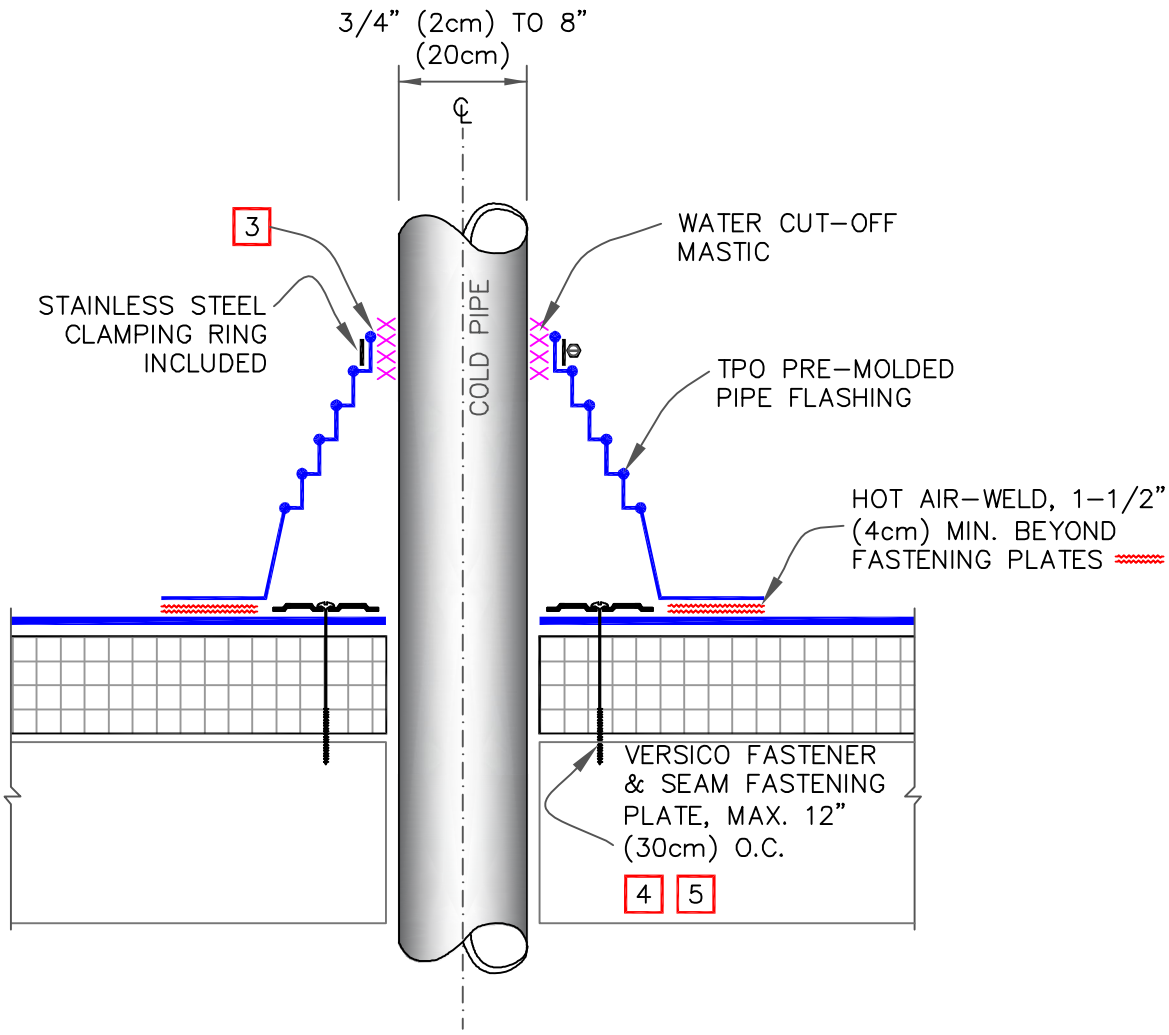

NOTES:

1. REMOVE ALL EXISTING LEAD AND FLASHING MATERIAL BEFORE INSTALLING PRE-MOLDED PIPE FLASHING.

2. TEMPERATURE OF THE PIPE PENETRATION MUST NOT EXCEED 160°F (71°C).

3. PRE-MOLDED PIPE FLASHING MUST HAVE INTACT RIB AT THE TOP EDGE REGARDLESS OF PIPE DIAMETER.

4. INSTALL A MINIMUM OF 4 FASTENERS AND PLATES AROUND THE PIPE, EQUALLY SPACED. IF FASTENERS AND PLATES CANNOT BE INSTALLED AS SHOWN, THEY MAY ALSO BE POSITIONED OUTSIDE THE PIPE MAXIMUM 12" (30cm) O.C. AND FLASHED WITH TPO REINFORCED MEMBRANE / TPO CUT-EDGE SEALANT. REFER TO DETAIL TPC-8.2.

5. FASTENERS AND PLATES ARE NOT REQUIRED ON ADHERED SYSTEMS UNLESS PIPE DIAMETER EXCEEDS 18" (46cm).

FASTENER & PRESSURE PLATE TYPES FOR DIFFERENT ROOF DECKS

DECK TYPE	OPTION	FASTENER	PLATE
STEEL OR WOOD	A	HPVX	HPVX
	B	HPV-XL	HPV-XL
STRUCTURAL CONCRETE	A	CD-10	HPVX
	B	MP 14-10	HPVX

VERSICO ROOFING SYSTEMS
© 2024 VERSICO

PRE-MOLDED FLASHING

MAXIMUM WARRANTY: 30 YEARS

TPO MEMBRANE
APPROVED SUBSTRATE
0 → SEE NOTE

PS (PRESSURE SENSITIVE)
P&S (PEEL & STICK)
QA (QUICK APPLIED)

THERMOPLASTIC ROOFING SYSTEM

TPC-8.1

CAUTION

DETAIL NOT FOR USE ON 25 OR 30-YEAR WARRANTY PROJECTS, PRE-FABRICATED/PRE-MOLDED ACCESSORIES MUST BE UTILIZED. ACCEPTABLE PIPE FLASHINGS SHALL CONFORM WITH TPO UNIVERSAL DETAILS TPC-8.1, TPC-8.3 OR TPC-8.4.

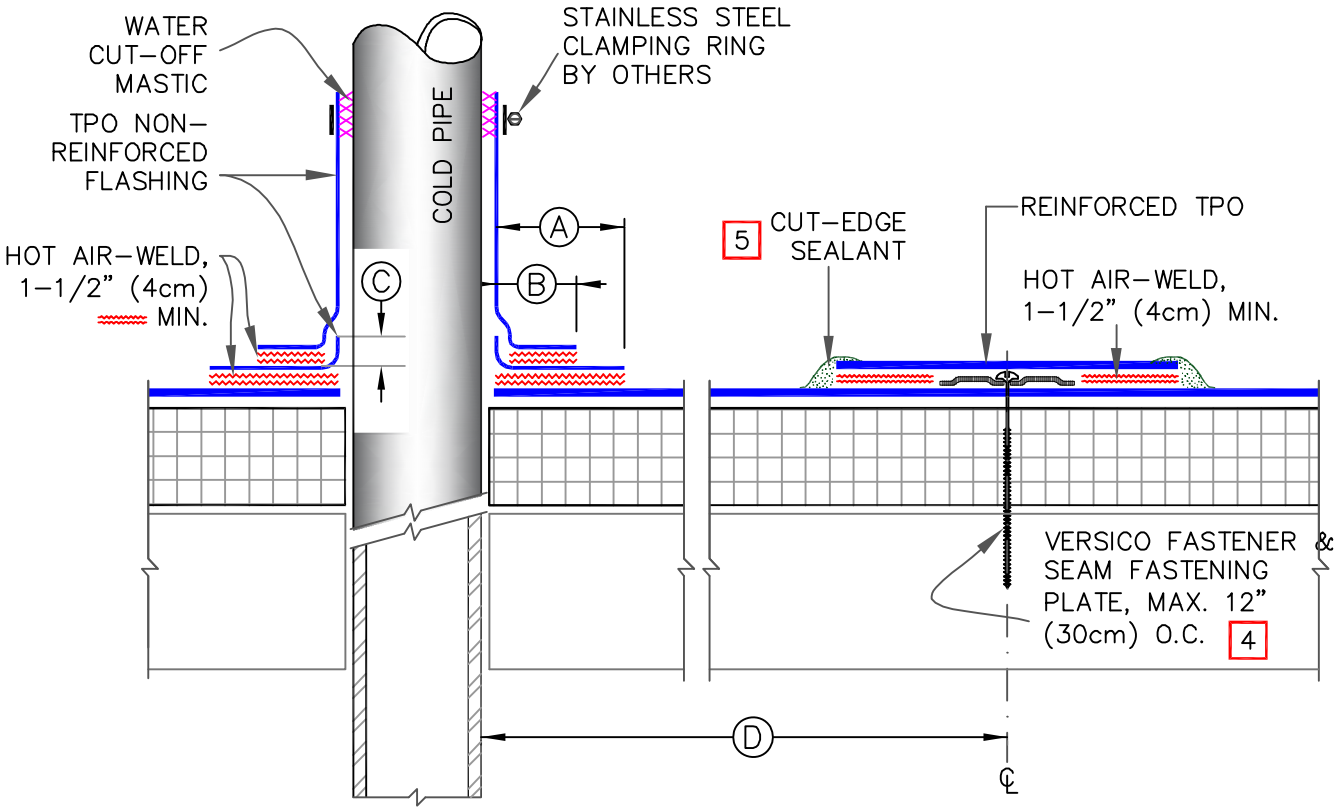

NOTES:

1. REMOVE ALL EXISTING LEAD AND FLASHING MATERIAL BEFORE INSTALLING FIELD FABRICATED PIPE FLASHING.
2. TEMPERATURE OF THE PIPE PENETRATION MUST NOT EXCEED 160˚F (71˚C).
3. TPO NON-REINFORCED FLASHING WRAPPED AROUND PIPE SHALL HAVE MINIMUM 1-1/2" (4cm) VERTICAL HOT AIR WELD. INSTALL A MINIMUM OF 4 SEAM FASTENING PLATES FOR PIPES WITH A DIAMETER UP TO 6" (15cm). ADDITIONAL SEAM FASTENING PLATES WILL BE REQUIRED FOR PIPES GREATER THAN 6" (15cm) IN DIAMETER AND SHALL BE SPACED 12" (30cm) ON CENTER MAXIMUM.
4. FASTENERS/PLATES ARE NOT REQUIRED ON ADHERED SYSTEMS UNLESS PIPE DIAMETER EXCEEDS 18" (50cm).
5. APPROXIMATELY 1/8" (0.5cm) DIAMETER BEAD OF CUT-EDGE SEALANT IS REQUIRED ON CUT EDGES OF REINFORCED TPO MEMBRANE.

DIMENSIONS		cm	
A	1-1/2"	4	TO
	2"	5	
B	1"	2.5	MIN.
C	1/2"	1.5	MIN.
D	12"	30	APPROX.

FASTENER & PRESSURE PLATE TYPES FOR DIFFERENT ROOF DECKS

DECK TYPE	OPTION	FASTENER	PLATE
STEEL OR WOOD	A	HPVX	HPVX
	B	HPV-XL	HPV-XL
STRUCTURAL CONCRETE	A	CD-10	HPVX
	B	MP 14-10	HPVX

VERSICO ROOFING SYSTEMS
© 2024 VERSICO

FIELD-FABRICATED PIPE FLASHING

MAXIMUM WARRANTY: SEE WARRANTY NOTE

TPO MEMBRANE
APPROVED SUBSTRATE
0 → SEE NOTE

PS (PRESSURE SENSITIVE)
P&S (PEEL & STICK)
QA (QUICK APPLIED)

THERMOPLASTIC ROOFING SYSTEM

TPC-8.2

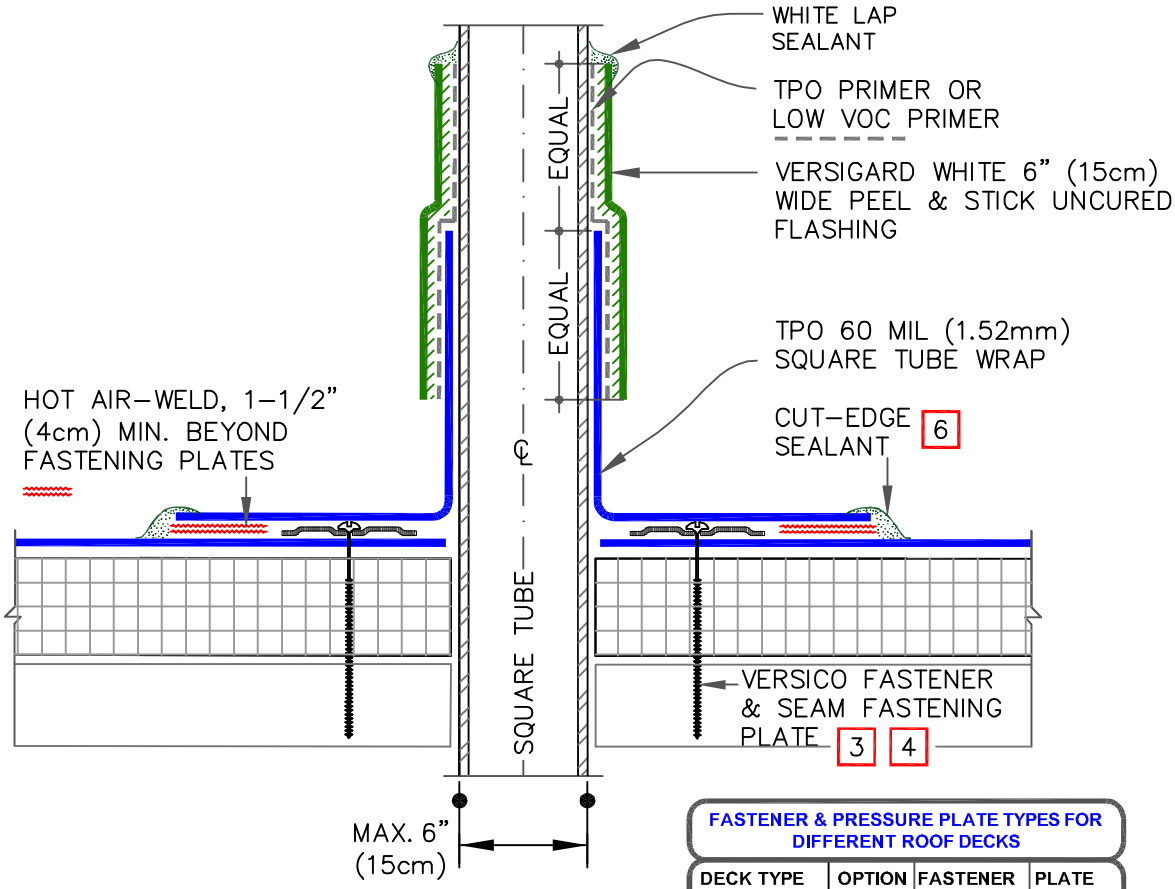

FASTENER & PRESSURE PLATE TYPES FOR DIFFERENT ROOF DECKS

DECK TYPE	OPTION	FASTENER	PLATE
STEEL OR WOOD	A	HPVX	HPVX
	B	HPV-XL	HPV-XL
STRUCTURAL CONCRETE	A	CD-10	HPVX
	B	MP 14-10	HPVX

NOTES:

1. REMOVE ALL EXISTING LEAD AND FLASHING MATERIAL BEFORE INSTALLING PRE-FABRICATED SQUARE TUBE WRAP.
2. TEMPERATURE OF THE PIPE PENETRATION MUST NOT EXCEED 160°F (71°C).
3. INSTALL A MINIMUM OF 4 SEAM FASTENING PLATES FOR TUBE SIDE DIMENSIONS UP TO 6" (15cm).
4. FASTENERS AND PLATES ARE NOT REQUIRED ON ADHERED SYSTEM. SEE TABLE FOR MF SYSTEM.
5. T-JOINT COVERS ARE NOT REQUIRED ON WHITE, TAN OR GRAY, FOR ADDITIONAL COLORS IT IS REQUIRED TO COVER T-JOINTS.
6. APPROXIMATELY 1/8" (0.5cm) DIAMETER BEAD OF CUT-EDGE SEALANT IS REQUIRED ON CUT EDGES OF REINFORCED TPO MEMBRANE.

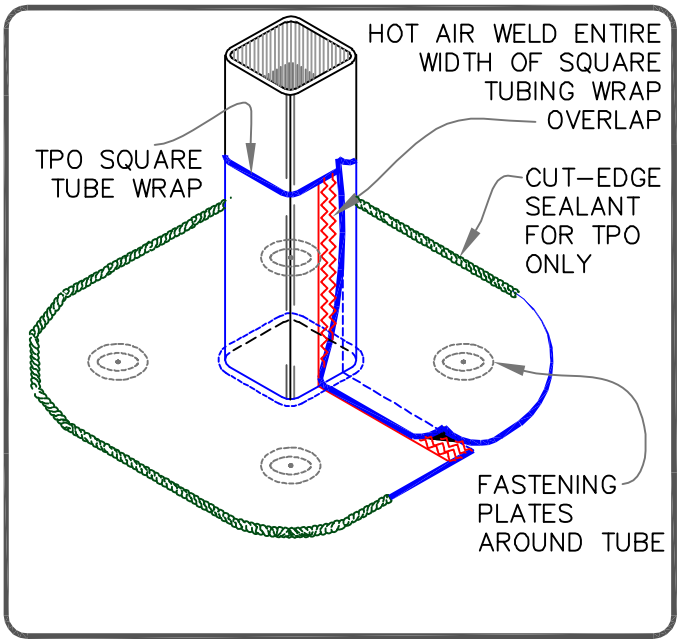

VERSICO ROOFING SYSTEMS
© 2024 VERSICO

CFA CERTIFIED PRE-FABRICATED SQUARE TUBE WRAP

MAXIMUM WARRANTY: 30 YEARS

TPO MEMBRANE
APPROVED SUBSTRATE
0 → SEE NOTE

PS (PRESSURE SENSITIVE)
P&S (PEEL & STICK)
QA (QUICK APPLIED)

THERMOPLASTIC ROOFING SYSTEM

TPC-8.3

DIMENSIONS		cm	
A	6"	15	MAX.
B	1-1/2"	4	MIN.
C	1/2"	1.5	MIN.
D	1"	2.5	MIN.
E	12"	30	APPROX.

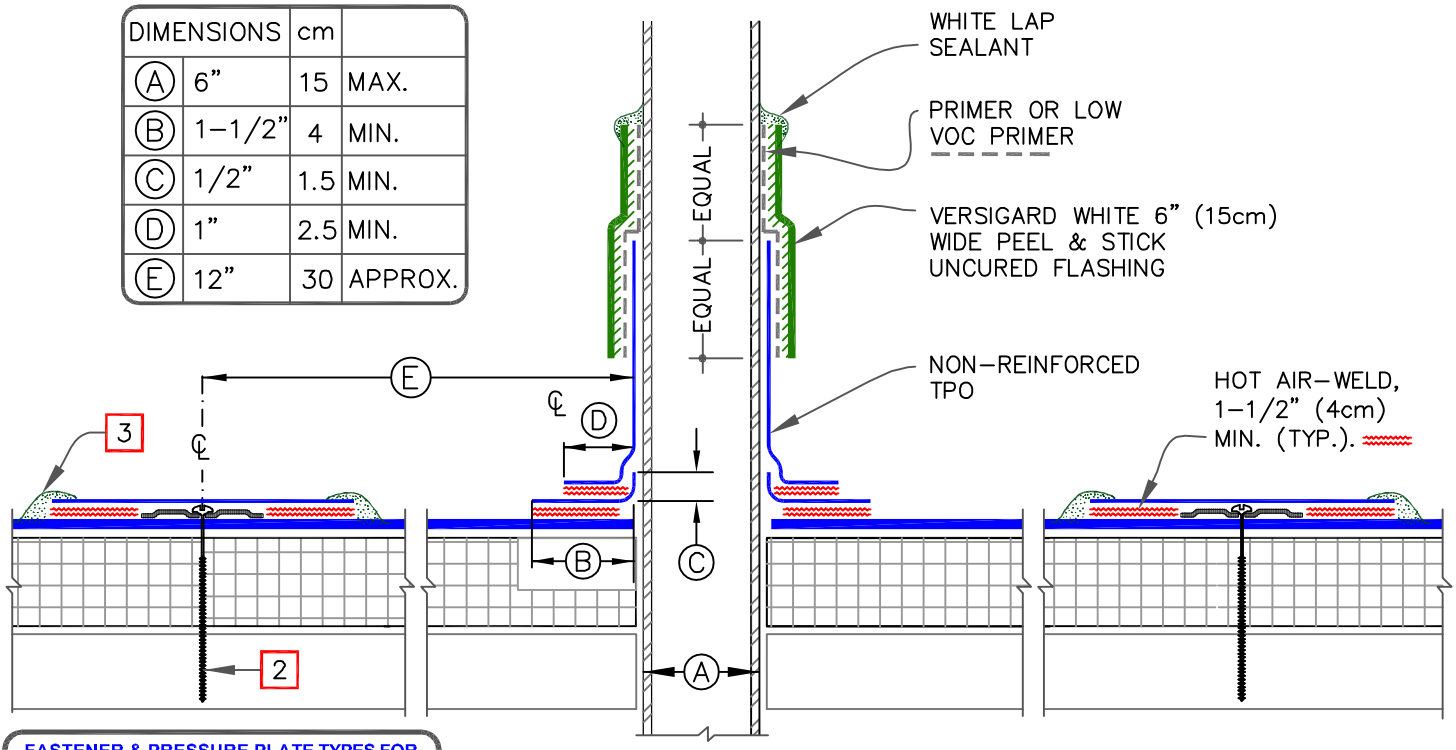

FASTENER & PRESSURE PLATE TYPES FOR DIFFERENT ROOF DECKS

DECK TYPE	OPTION	FASTENER	PLATE
STEEL OR WOOD	A	HPVX	HPVX
	B	HPV-XL	HPV-XL
STRUCTURAL CONCRETE	A	CD-10	HPVX
	B	MP 14-10	HPVX

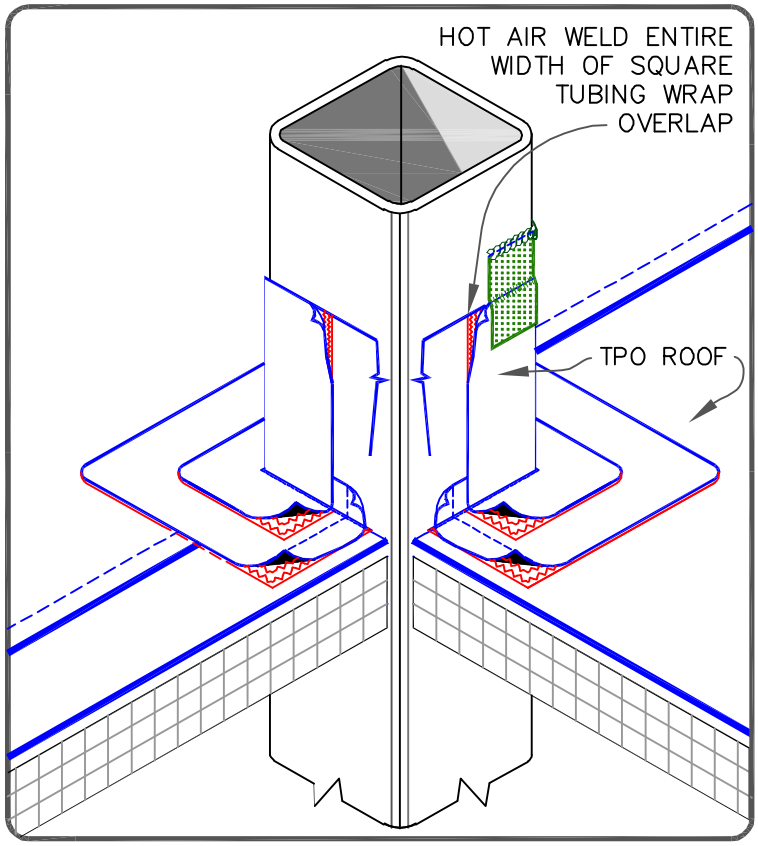

NOTES:

1. REMOVE ALL EXISTING LEAD AND FLASHING MATERIAL BEFORE INSTALLING PRE-FABRICATED SQUARE TUBE WRAP.
2. VERSICO FASTENERS & SEAM FASTENING PLATES FOR MECHANICALLY FASTENED SYSTEM (NOT REQUIRED ON ADHERED SYSTEM). SEE TABLE ABOVE.
3. APPROXIMATELY 1/8" (0.5cm) DIAMETER BEAD OF CUT-EDGE SEALANT IS REQUIRED ON CUT EDGES OF REINFORCED TPO MEMBRANE.

VERSICO ROOFING SYSTEMS

© 2024 VERSICO

FIELD-FABRICATED SQUARE TUBE FLASHING

MAXIMUM WARRANTY: 30 YEARS

TPO MEMBRANE
APPROVED SUBSTRATE
0 → SEE NOTE

PS (PRESSURE SENSITIVE)
P&S (PEEL & STICK)
QA (QUICK APPLIED)

THERMOPLASTIC ROOFING SYSTEM

TPC-8.4

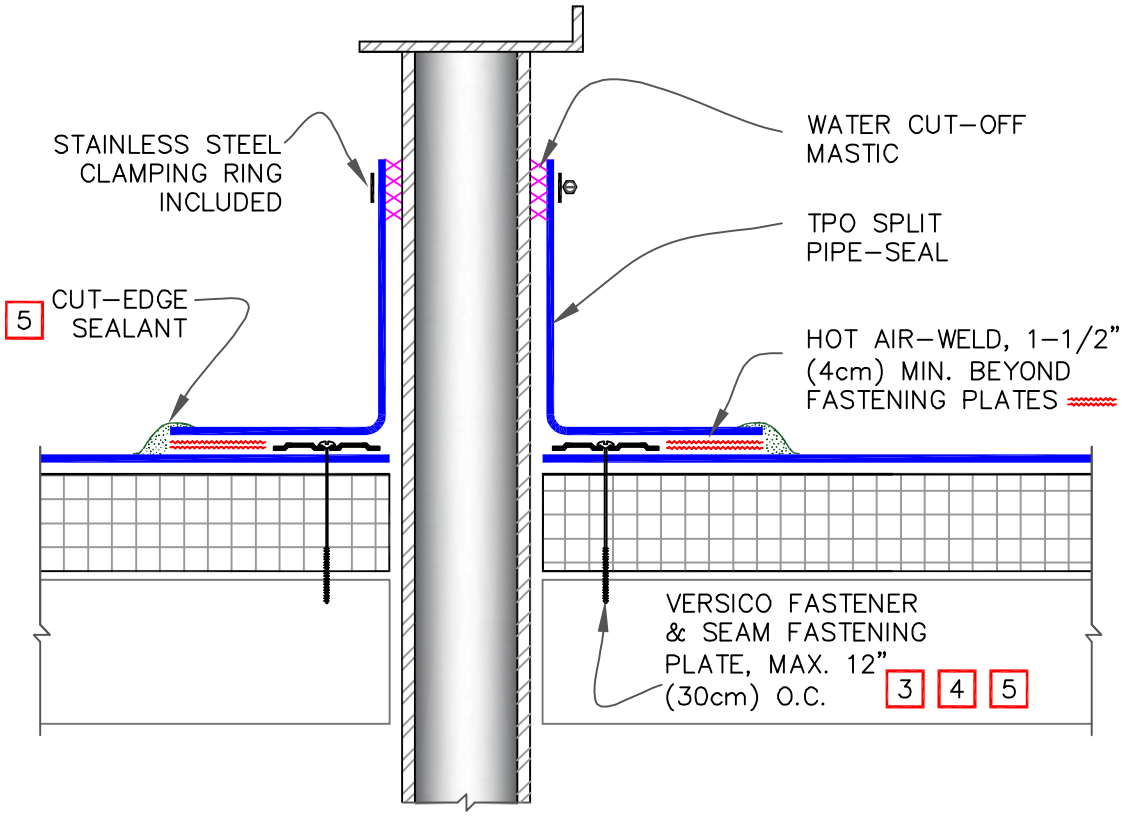

NOTES:

1. REMOVE ALL EXISTING LEAD AND FLASHING MATERIAL BEFORE INSTALLING SPLIT PIPE FLASHING.

2. TEMPERATURE OF THE PIPE PENETRATION MUST NOT EXCEED 160°F (71°C).

3. INSTALL A MINIMUM OF 4 FASTENERS AND PLATES AROUND THE PIPE, EQUALLY SPACED. IF FASTENERS AND PLATES CANNOT BE INSTALLED AS SHOWN, THEY MAY ALSO BE POSITIONED OUTSIDE THE PIPE MAXIMUM 12" (30cm) O.C. AND FLASHED WITH TPO REINFORCED MEMBRANE/CUT-EDGE SEALANT. REFER TO DETAIL TPC-8.2.

4. FASTENERS AND PLATES ARE NOT REQUIRED ON ADHERED SYSTEMS UNLESS PIPE DIAMETER EXCEEDS 18" (46cm).

5. APPROXIMATELY 1/8" (0.5cm) DIAMETER BEAD OF CUT-EDGE SEALANT IS REQUIRED ON CUT EDGES OF REINFORCED TPO MEMBRANE ONLY.

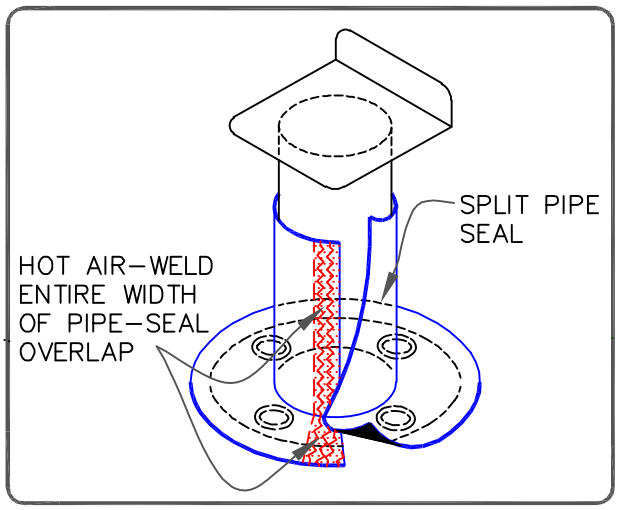

VERSICO ROOFING SYSTEMS
© 2024 VERSICO

CFA CERTIFIED PRE-FABRICATED SPLIT PIPE SEAL

MAXIMUM WARRANTY: 30 YEARS

TPO MEMBRANE
APPROVED SUBSTRATE
0 → SEE NOTE

PS (PRESSURE SENSITIVE)
P&S (PEEL & STICK)
QA (QUICK APPLIED)

THERMOPLASTIC ROOFING SYSTEM

TPC-8.5

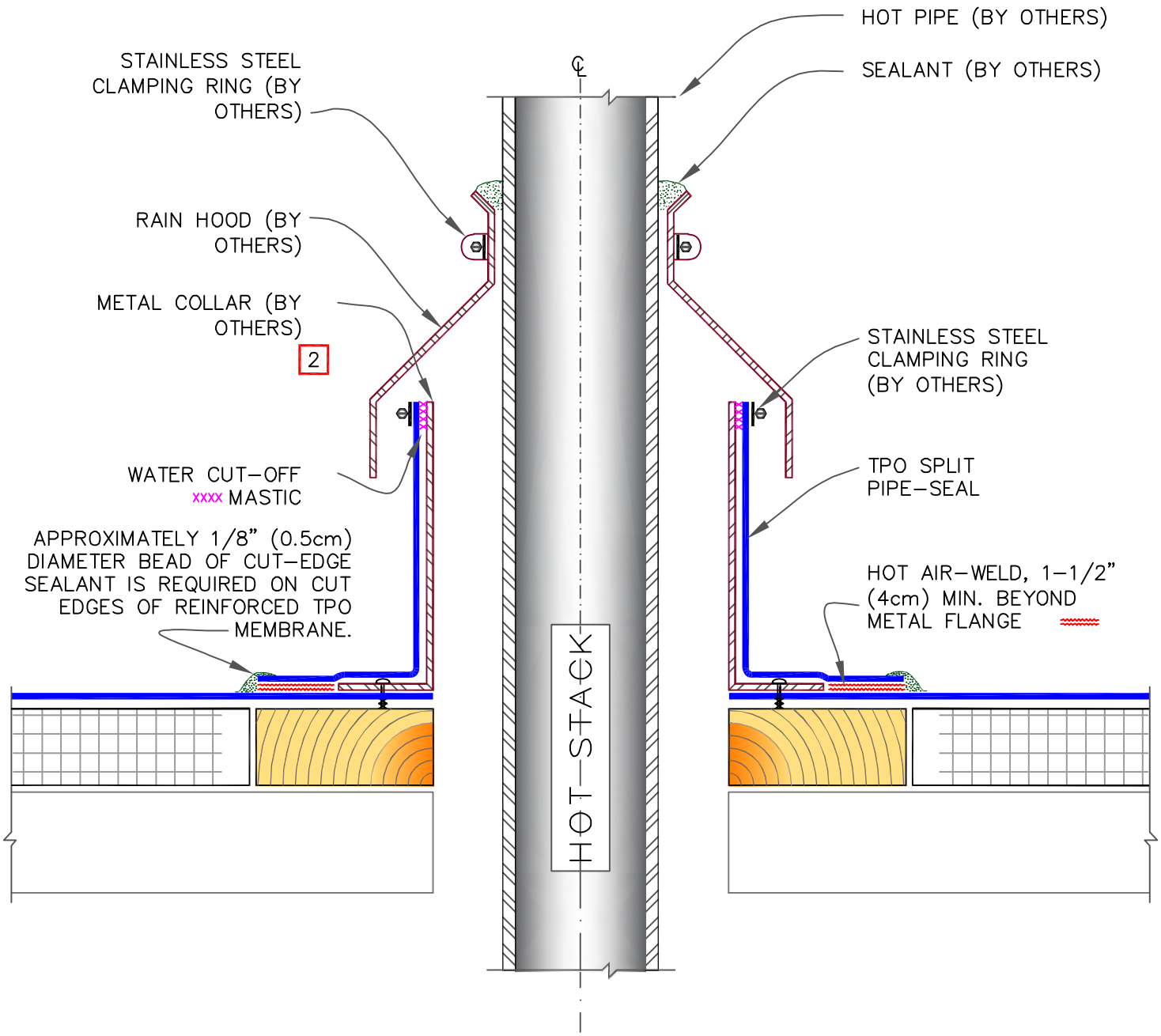

NOTES:

1. REMOVE ALL EXISTING LEAD AND FLASHING MATERIAL BEFORE INSTALLING PIPE FLASHING.
2. TEMPERATURE OF THE METAL COLLAR MUST NOT EXCEED 160°F (71°C).
3. T-JOINT COVERS ARE NOT REQUIRED ON WHITE, TAN OR GRAY, FOR ADDITIONAL COLORS IT IS REQUIRED TO COVER T-JOINTS.

CFA (CERTIFIED FABRICATED ACCESSORIES)

VERSICO ROOFING SYSTEMS
© 2024 VERSICO

CFA CERTIFIED HOT PIPE FLASHING

MAXIMUM WARRANTY: 30 YEARS

TPO MEMBRANE
APPROVED SUBSTRATE
0 → SEE NOTE

PS (PRESSURE SENSITIVE)
P&S (PEEL & STICK)
QA (QUICK APPLIED)

THERMOPLASTIC ROOFING SYSTEM

TPC-8.6

9.1 MECHANICAL TERMINATION WITH COUNTER FLASHING

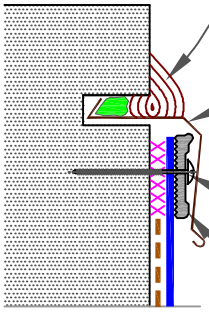

VERSICO UNIVERSAL SINGLE-PLY SEALANT OR SEALANT (BY OTHERS)

METAL COUNTER-FLASHING, WITH LEAD WEDGES AS REQUIRED (BY OTHERS)

THREADED FASTENERS OR VERSICO ZINC NAIL-IN ANCHOR

VERSICO TERMINATION BAR

WARRANTY UP TO 30 YEARS | **SEE INSET A**

9.2 MECHANICAL TERMINATION

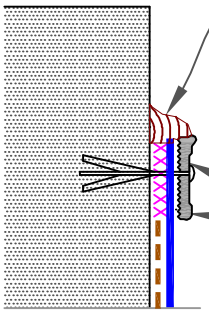

VERSICO UNIVERSAL SINGLE-PLY SEALANT OR SEALANT (BY OTHERS)

THREADED FASTENERS OR VERSICO ZINC NAIL-IN ANCHOR, RECOMMENDED AT 6" (15cm) O.C.

VERSICO TERMINATION BAR

WARRANTY UP TO 20 YEARS | **SEE INSET A**

INSET A

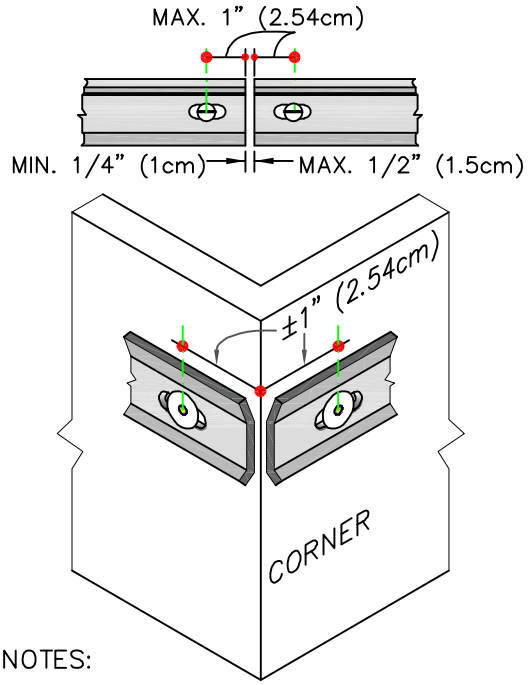

NOTES:

1. APPLY ON HARD SMOOTH SURFACE ONLY; NOT FOR USE ON EXPOSED WOOD.
2. DO NOT WRAP TERMINATION BAR AROUND CORNERS.
3. DETAIL 9.4 MUST BE USED AT VERTICAL JOINTS IN PANEL WALLS.

9.3 COUNTER FLASHING TERMINATION

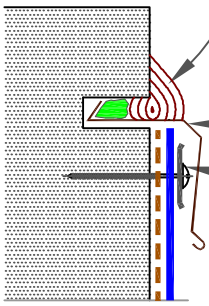

VERSICO UNIVERSAL SINGLE-PLY SEALANT OR SEALANT (BY OTHERS)

METAL COUNTER-FLASHING, WITH LEAD WEDGES AS REQUIRED (BY OTHERS)

FASTEN MEMBRANE @ 12" (30cm) O.C. MAX. USE GALVANIZED WASHERS, MIN. 1" (2.54cm) DIAMETER

NOTE:

1. WHEN MECHANICAL FASTENERS ARE USED TO PENETRATE THE METAL COUNTER-FLASHING, USE EPDM WASHERS, APPLY WATER CUT-OFF MASTIC UNDER THE COUNTER-FLASHING OR SEAL THE FASTENER HEADS.

WARRANTY UP TO 10 YEARS

APPLICABLE BONDING ADHESIVE

xxx WATER CUT-OFF MASTIC- MUST BE HELD UNDER CONSTANT COMPRESSION.

© 2024 VERSICO

9.4 MECHANICAL TERMINATION AT VERTICAL JOINTS

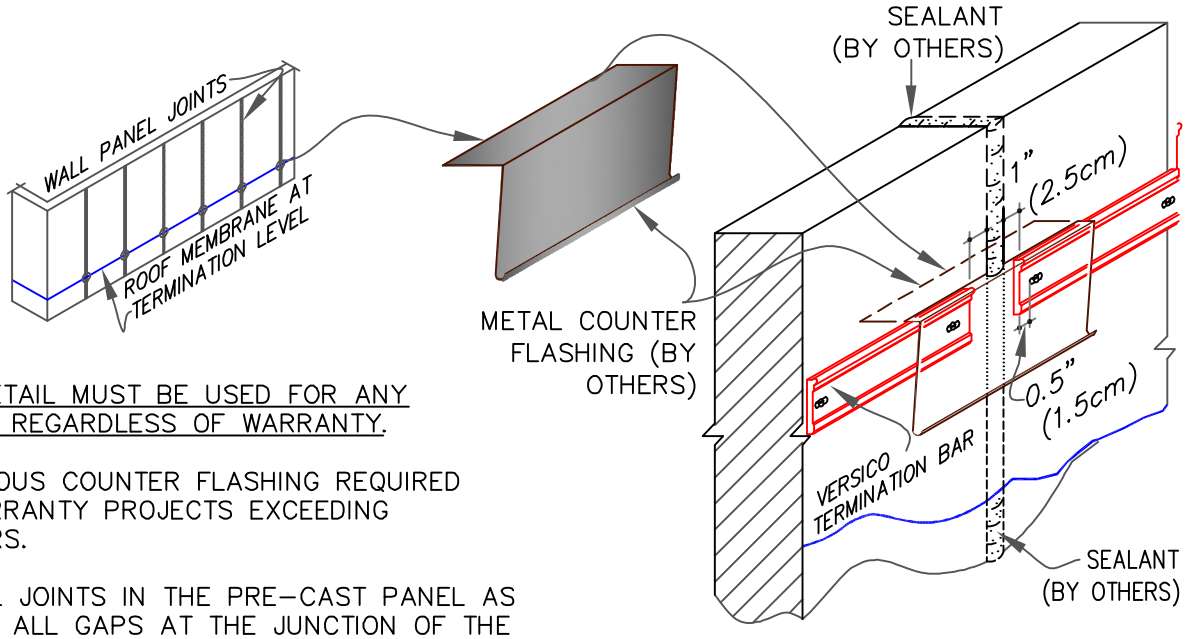

NOTES:

1. THIS DETAIL MUST BE USED FOR ANY PROJECT REGARDLESS OF WARRANTY.
2. CONTINUOUS COUNTER FLASHING REQUIRED FOR WARRANTY PROJECTS EXCEEDING 20-YEARS.
3. VERTICAL JOINTS IN THE PRE-CAST PANEL AS WELL AS ALL GAPS AT THE JUNCTION OF THE TILT-UP PANEL AND ROOF DECK MUST BE FULLY SEALED TO PREVENT AIR INFILTRATION.
4. APPLY ON HARD SMOOTH SURFACE ONLY.
5. THIS DETAIL MUST BE USED FOR ANY PROJECT REGARDLESS OF WARRANTY.

9.5 VERSITRIM 200 & 300 COPINGS

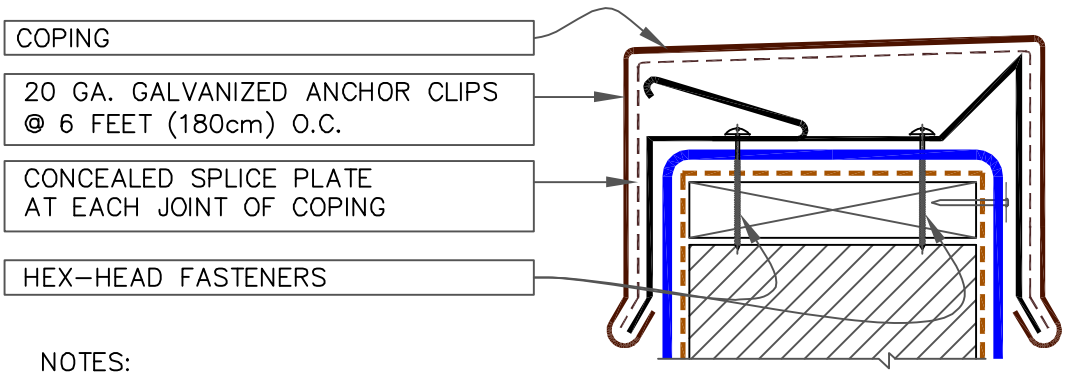

NOTES:

1. MEMBRANE MUST BE EXTENDED AT CORNERS TO PROVIDE COMPLETE COVERAGE OF THE TOP WALL SURFACE. REFER TO 3D DETAIL ON TPC-9 DETAIL 9.6.
2. REFER TO VERSITRIM COPING INSTALLATION INSTRUCTION MANUAL FOR STEP-BY-STEP INSTRUCTION PROCEDURES.

APPLICABLE BONDING ADHESIVE

xxx WATER CUT-OFF MASTIC- MUST BE HELD UNDER CONSTANT COMPRESSION.

© 2024 VERSICO

9.6 SHEET METAL COPING (BY OTHERS)

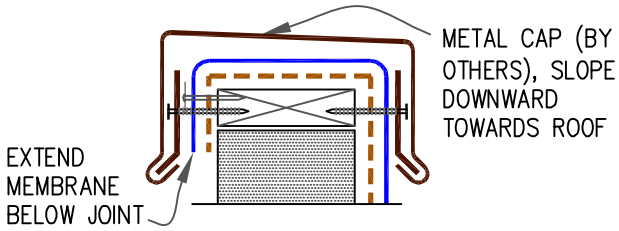

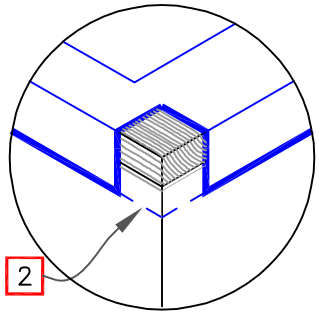

NOTES:

1. FOR VERSICO VERSITRIM COPING, REFER TO INSTALLATION INSTRUCTIONS PUBLISHED SEPARATELY.
2. MEMBRANE MUST BE EXTENDED TO CORNERS TO PROVIDE COMPLETE COVERAGE OF THE TOP WALL SURFACE.

9.7 MASONRY COPINGS (BY OTHERS)

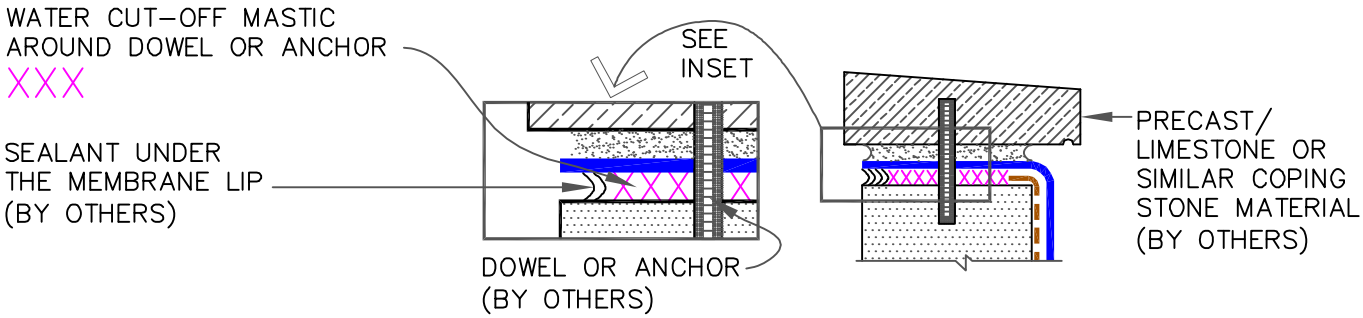

APPLICABLE BONDING ADHESIVE	XXX WATER CUT-OFF MASTIC- MUST BE HELD UNDER CONSTANT COMPRESSION.

© 2024 VERSICO

MEMBRANE TERMINATIONS, PAGE 3 OF 3

MAXIMUM WARRANTY: 30 YEARS

TPO MEMBRANE
APPROVED SUBSTRATE
0 SEE NOTE
PS (PRESSURE SENSITIVE)
P&S (PEEL & STICK)
QA (QUICK APPLIED)

THERMOPLASTIC ROOFING SYSTEM

TPC-9

CAUTION

FASTENERS AND PLATES ARE REQUIRED AT 6" (15cm) O.C. FOR ADHERED SYSTEMS WITH WARRANTY WIND SPEED COVERAGE GREATER THAN 90 MPH AND FOR ALL PROJECTS WITH WARRANTIES GREATER THAN 20 YEARS.

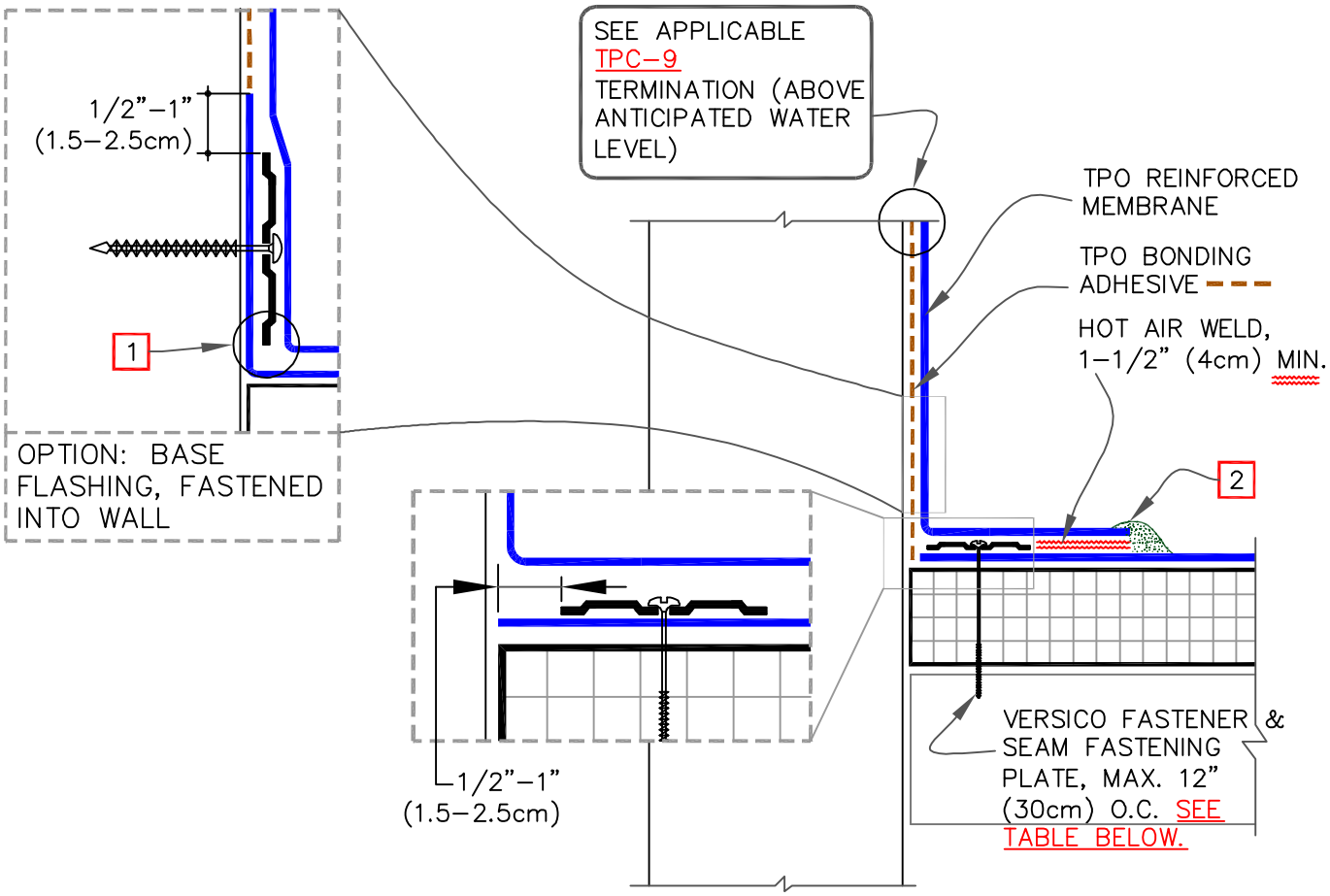

FASTENER & PRESSURE PLATE TYPES FOR DIFFERENT ROOF DECKS

DECK TYPE	OPTION	FASTENER	PLATE
STEEL OR WOOD	A	HPVX	HPVX
	B	HPV–XL	HPV–XL
STRUCTURAL CONCRETE	A	CD–10	HPVX
	B	MP 14–10	HPVX

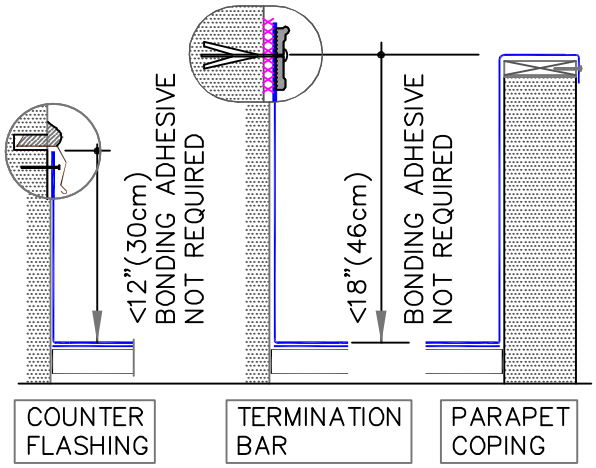

NOTES:

1. CARE MUST BE TAKEN TO PRESS THE MEMBRANE TIGHTLY INTO THE ANGLE CHANGE. PLACING THE PLATES TIGHT INTO THE ANGLE CHANGE WILL HELP HOLD THE MEMBRANE IN THE PROPER POSITION.

2. APPROXIMATELY 1/8" (0.5cm) DIAMETER BEAD OF CUT–EDGE SEALANT IS REQUIRED ON CUT EDGES OF REINFORCED TPO MEMBRANE.

VERSICO ROOFING SYSTEMS

© 2024 VERSICO

PARAPET FLASHING FASTENED INTO WALL

MAXIMUM WARRANTY: 30 YEARS

TPO MEMBRANE
APPROVED SUBSTRATE
0 → SEE NOTE

PS (PRESSURE SENSITIVE)
P&S (PEEL & STICK)
QA (QUICK APPLIED)

THERMOPLASTIC ROOFING SYSTEM

TPC–12.1

CAUTION

FASTENERS AND PLATES ARE REQUIRED AT 6" (15cm) O.C. FOR ADHERED SYSTEMS WITH WARRANTY WIND SPEED COVERAGE GREATER THAN 90 MPH AND FOR ALL PROJECTS WITH WARRANTIES GREATER THAN 20 YEARS.

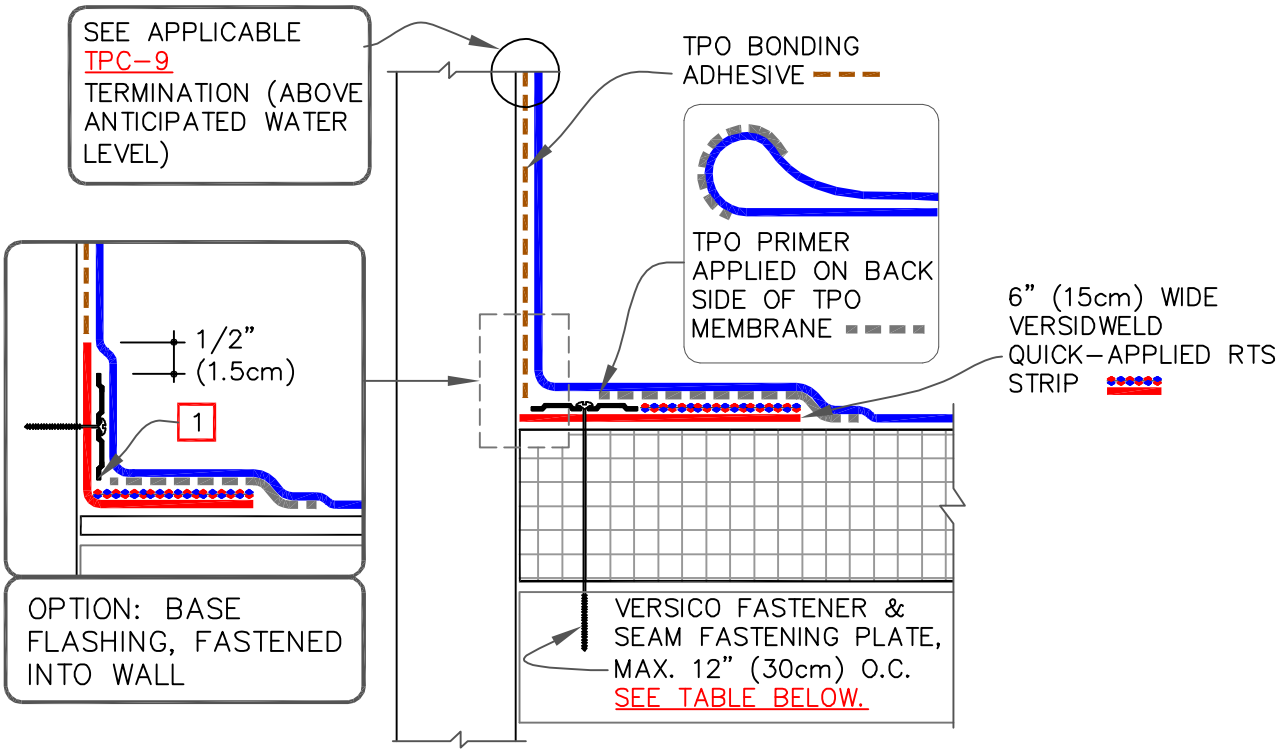

NOTE:

1. IN A CASE WHERE FASTENERS MUST BE FASTENED INTO THE VERTICAL SURFACE, CARE MUST BE TAKEN TO PRESS THE QA RTS, AS WELL AS THE MEMBRANE, TIGHTLY INTO THE ANGLE CHANGE TO MAXIMIZE CONTACT BETWEEN THE TAPE AND MEMBRANE. MEMBRANE MUST BE ADHERED TO THE FULL WIDTH OF THE TAPE. PLACING THE PLATES TIGHT INTO THE ANGLE CHANGE WILL HELP HOLD THE QA RTS IN THE PROPER POSITION.

FASTENER TYPES ON MECHANICALLY FASTENED ROOF ASSEMBLY

DECK TYPE	OPTION	FASTENER	PLATE
STEEL OR WOOD	A	HPVX	HPVX
	B	HPV-XL	HPV-XL
STRUCTURAL CONCRETE	A	CD-10	HPVX
	B	MP 14-10	HPVX

VERSICO ROOFING SYSTEMS
© 2024 VERSICO

PARAPET FLASHING WITH PRESSURE SENSITIVE QA RTS, PAGE 1 OF 2

MAXIMUM WARRANTY: 30 YEARS

TPO MEMBRANE
APPROVED SUBSTRATE
0 SEE NOTE

PS (PRESSURE SENSITIVE)
P&S (PEEL & STICK)
QA (QUICK APPLIED)

THERMOPLASTIC ROOFING SYSTEM

TPC-12.2A

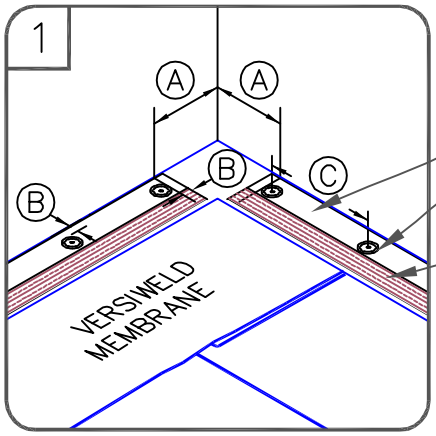

6" (15cm) WIDE QUICK-APPLIED REINFORCED TERMINATION STRIP (QA RTS)

VERSICO FASTENER & SEAM FASTENING PLATE, MAX. 12" (30cm) O.C.

PRE-APPLIED PEEL & STICK TAPE

TPO PRIMER

VERSIWELD BONDING ADHESIVE

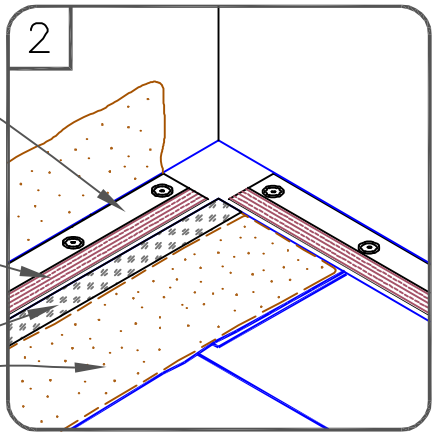

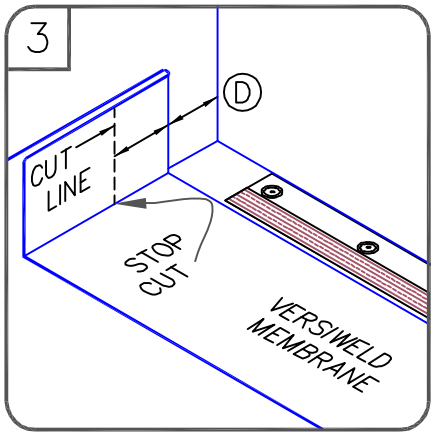

DIMENSIONS		cm	
A	6"	15	TO
	9"	23	
B	1/8"	0.5	MIN.
	1"	2.5	MAX.
C	12"	30	MIN.
D	6"	15	MIN.
E	1-1/2"	4	MIN.

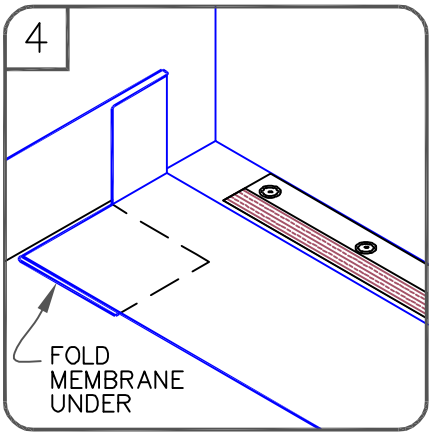

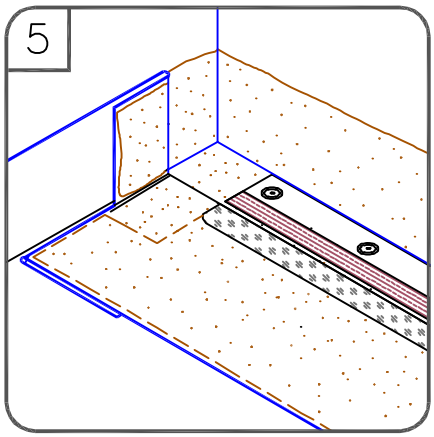

HOT AIR WELD FLAP IN STEP 7

CUT AT 45°

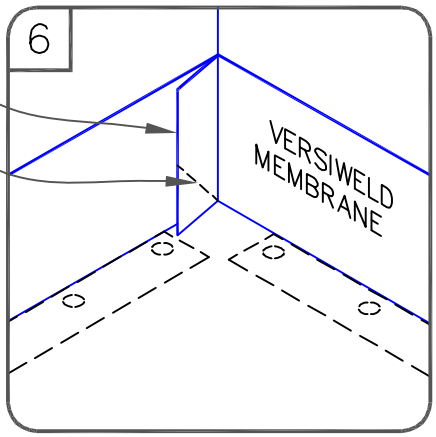

NOTES:

1. THE CUT SECTION OF VERTICAL MEMBRANE WILL BE FOLDED UNDER THE FIELD MEMBRANE AS SHOWN IN STEP 4.

2. APPLY INSIDE CORNER IN ACCORDANCE WITH VERSICO DETAILS TPC-15.1 OR TPC-15.2.

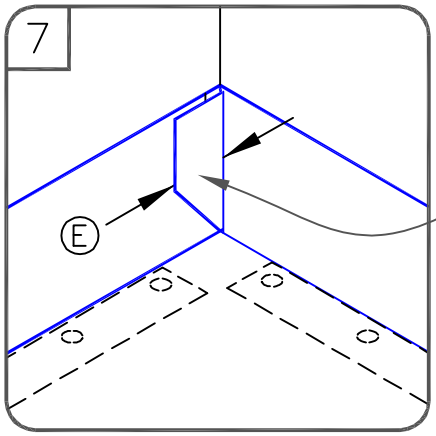

HOT AIR WELD

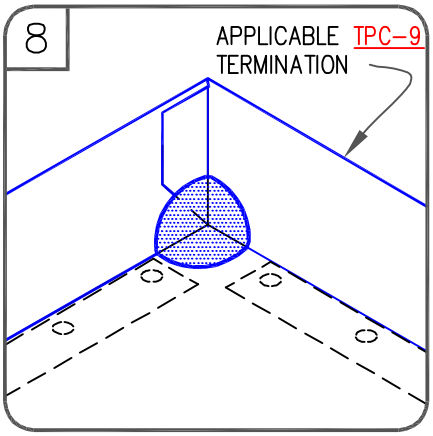

VERSICO ROOFING SYSTEMS

© 2024 VERSICO

PARAPET FLASHING WITH PRESSURE SENSITIVE QA RTS, PAGE 2 OF 2

MAXIMUM WARRANTY: 30 YEARS

TPO MEMBRANE
APPROVED SUBSTRATE
0 → SEE NOTE

PS (PRESSURE SENSITIVE)
P&S (PEEL & STICK)
QA (QUICK APPLIED)

THERMOPLASTIC ROOFING SYSTEM

TPC-12.2B

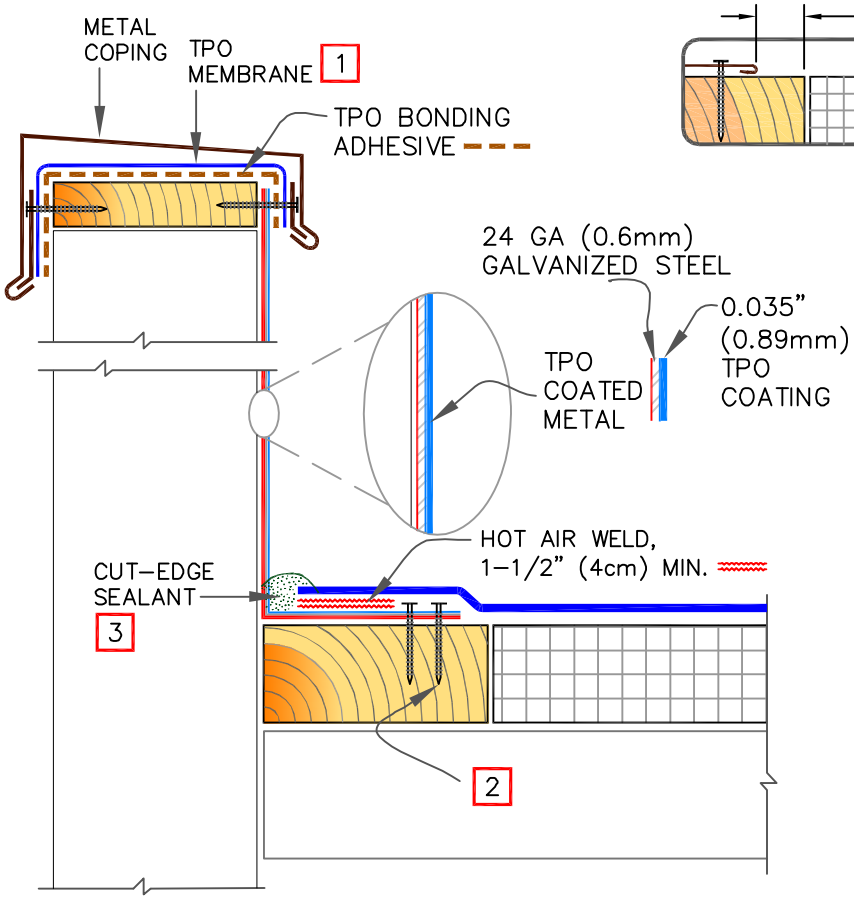

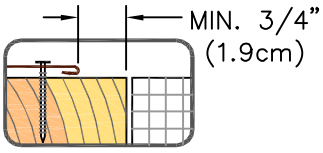

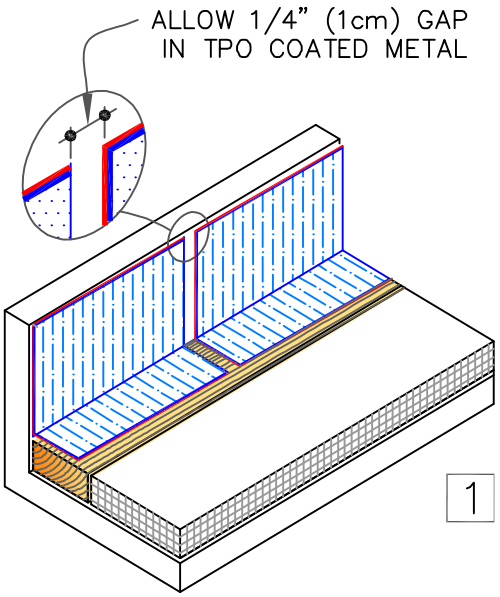

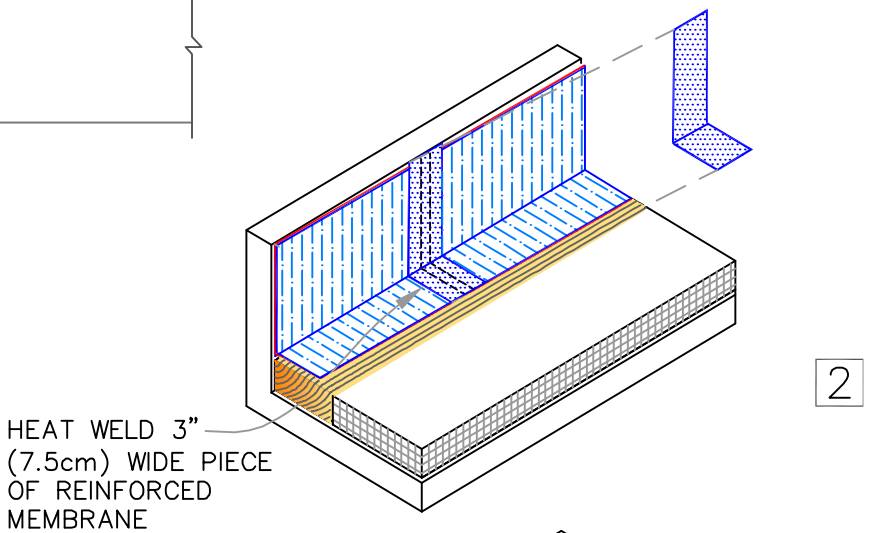

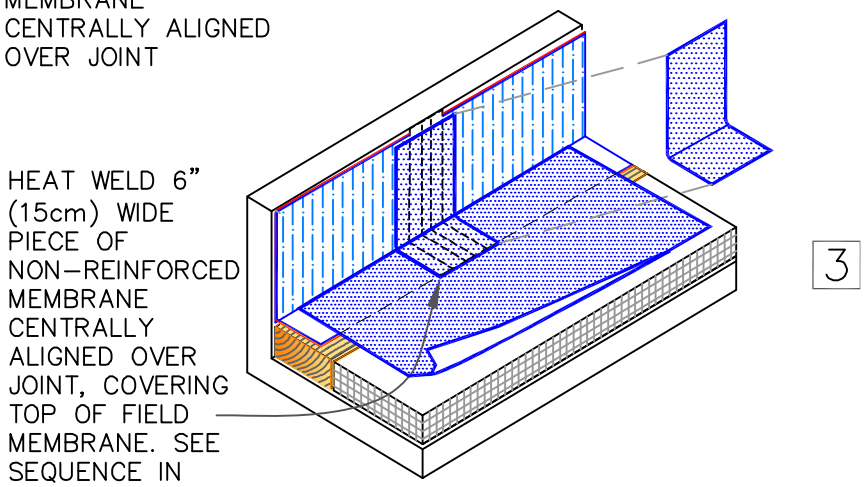

SEQUENCE:

1. 3" (7.6cm) REINFORCED MEMBRANE STRIPPING.
2. FIELD MEMBRANE.
3. TOP 6" (15.2cm) NON-REINFORCED MEMBRANE STRIPPING.

NOTES:

1. PLACE A LAYER OF TPO MEMBRANE UNDER THE METAL CAP TO PROTECT AGAINST MOISTURE INFILTRATION AT JOINTS.
2. FASTEN COATED METAL FLASHING TO WOOD NAILERS USING 1-1/2" (4cm) MIN. RING SHANK NAILS SPACED 6" (15cm) ON CENTER AND STAGGERED APPROX. 1/2" (1.5cm).
3. APPROXIMATELY 1/8" (0.5cm) DIAMETER BEAD OF CUT-EDGE SEALANT IS REQUIRED ON CUT EDGES OF REINFORCED TPO MEMBRANE.
4. SEE TPC-15.3 FOR ADDITIONAL INFORMATION.

VERSICO ROOFING SYSTEMS

© 2024 VERSICO

TPO COATED METAL WALL FLASHING

MAXIMUM WARRANTY: 30 YEARS

TPO MEMBRANE
APPROVED SUBSTRATE
0 SEE NOTE

PS (PRESSURE SENSITIVE)
P&S (PEEL & STICK)
QA (QUICK APPLIED)

THERMOPLASTIC ROOFING SYSTEM

TPC-12.3

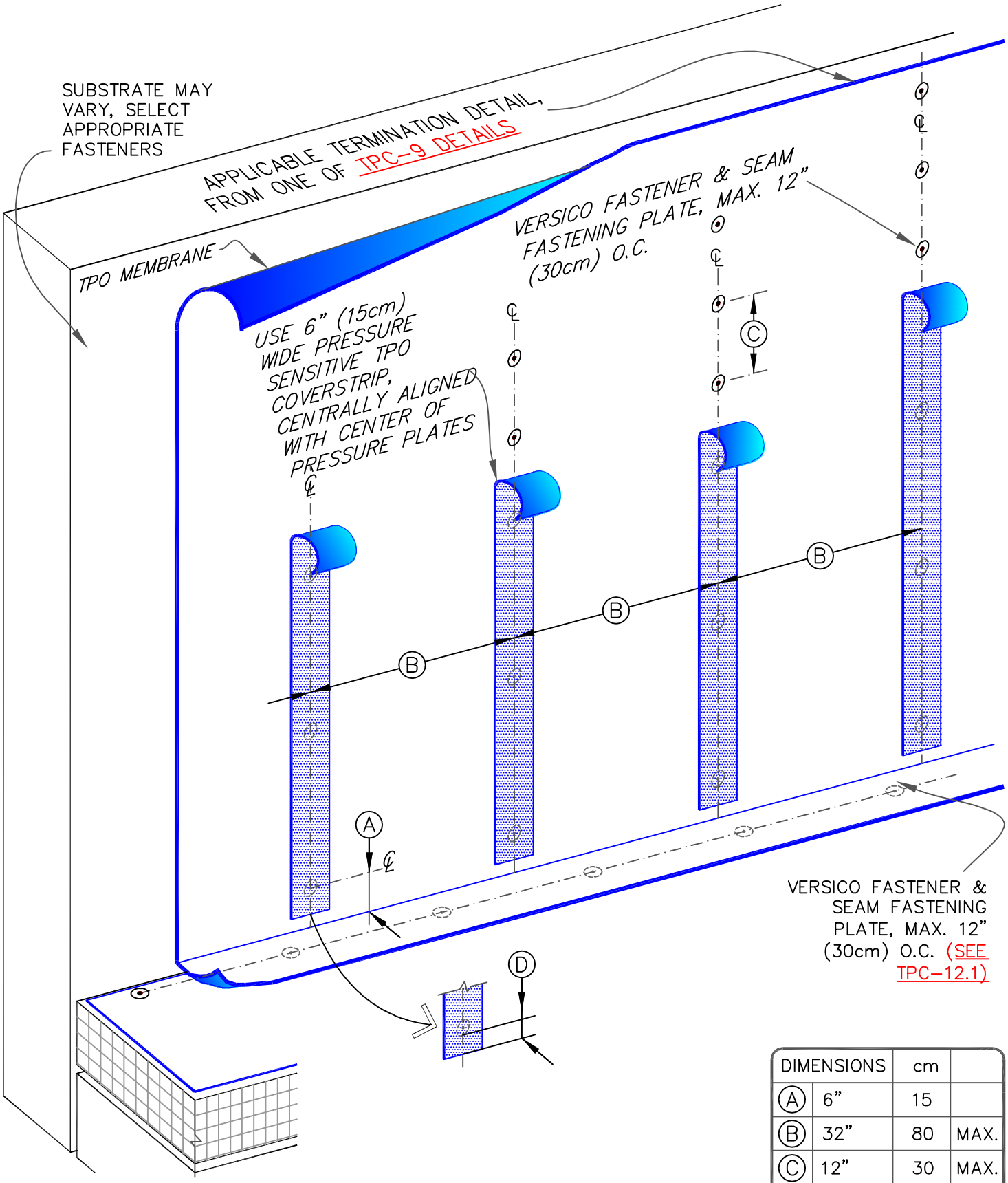

DIMENSIONS		cm	
A	6"	15	
B	32"	80	MAX.
C	12"	30	MAX.
D	3"	7.6	MIN.

VERSICO ROOFING SYSTEMS

© 2024 VERSICO

PARAPET FLASHING / NO ADHESION – ANY HEIGHT OPTION

MAXIMUM WARRANTY: 30 YEARS

TPO MEMBRANE
APPROVED SUBSTRATE
0 → SEE NOTE

PS (PRESSURE SENSITIVE)
P&S (PEEL & STICK)
QA (QUICK APPLIED)

THERMOPLASTIC ROOFING SYSTEM

TPC–12.6

TPO WITH SAT (SELF ADHERING TECHNOLOGY)

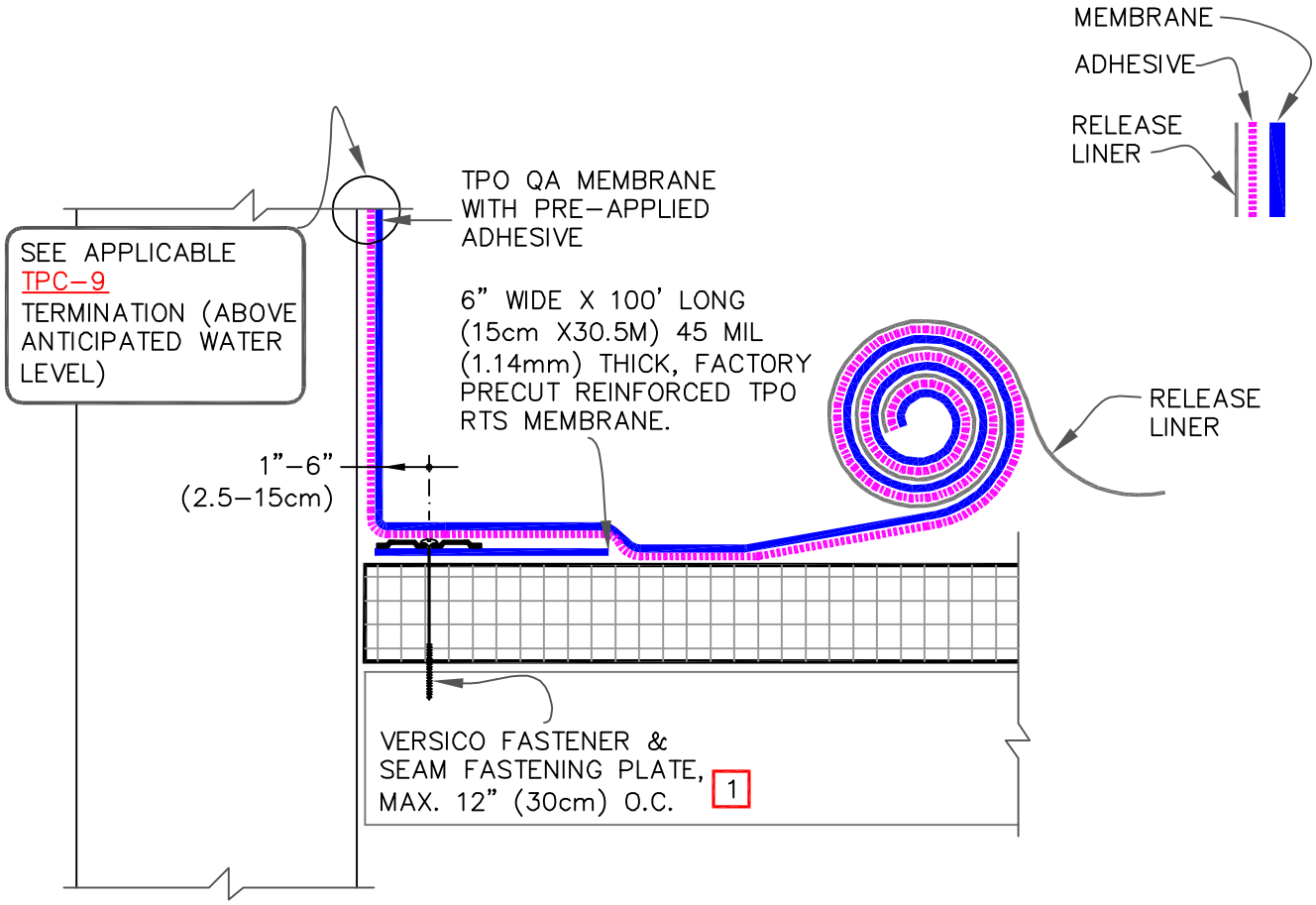

NOTE:

1. WIND SPEED GREATER THAN 90 MPH (145 KILOMETERS /HOURS)(40.3 METER PER SECOND) OR PROJECTS WITH 25 OR 30–YEAR WARRANTIES REQUIRE FASTENING @ 6"(15.2cm) O.C.

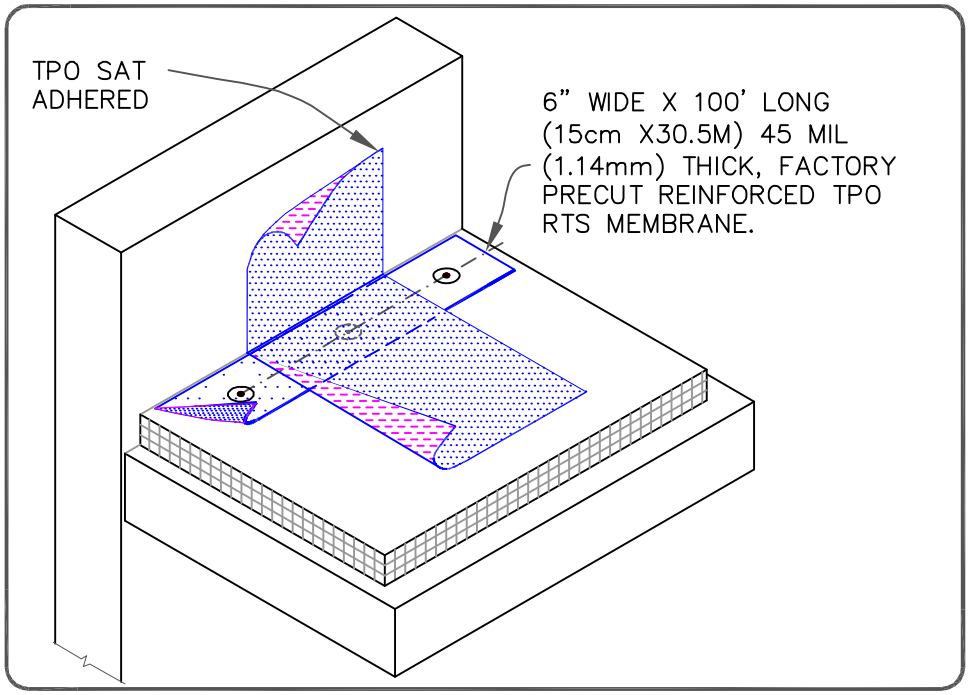

RUSS (REINFORCED UNIVERSAL SECUREMENT STRIP)

VERSICO ROOFING SYSTEMS
© 2024 VERSICO

QA TPO PARAPET FLASHING WITH TPO SECUREMENT STRIP

MAXIMUM WARRANTY: 30 YEARS

TPO MEMBRANE
APPROVED SUBSTRATE
0 → SEE NOTE

PS (PRESSURE SENSITIVE)
P&S (PEEL & STICK)
QA (QUICK APPLIED)

THERMOPLASTIC ROOFING SYSTEM

TPC–12.7

TPO WITH SAT (SELF ADHERING TECHNOLOGY)

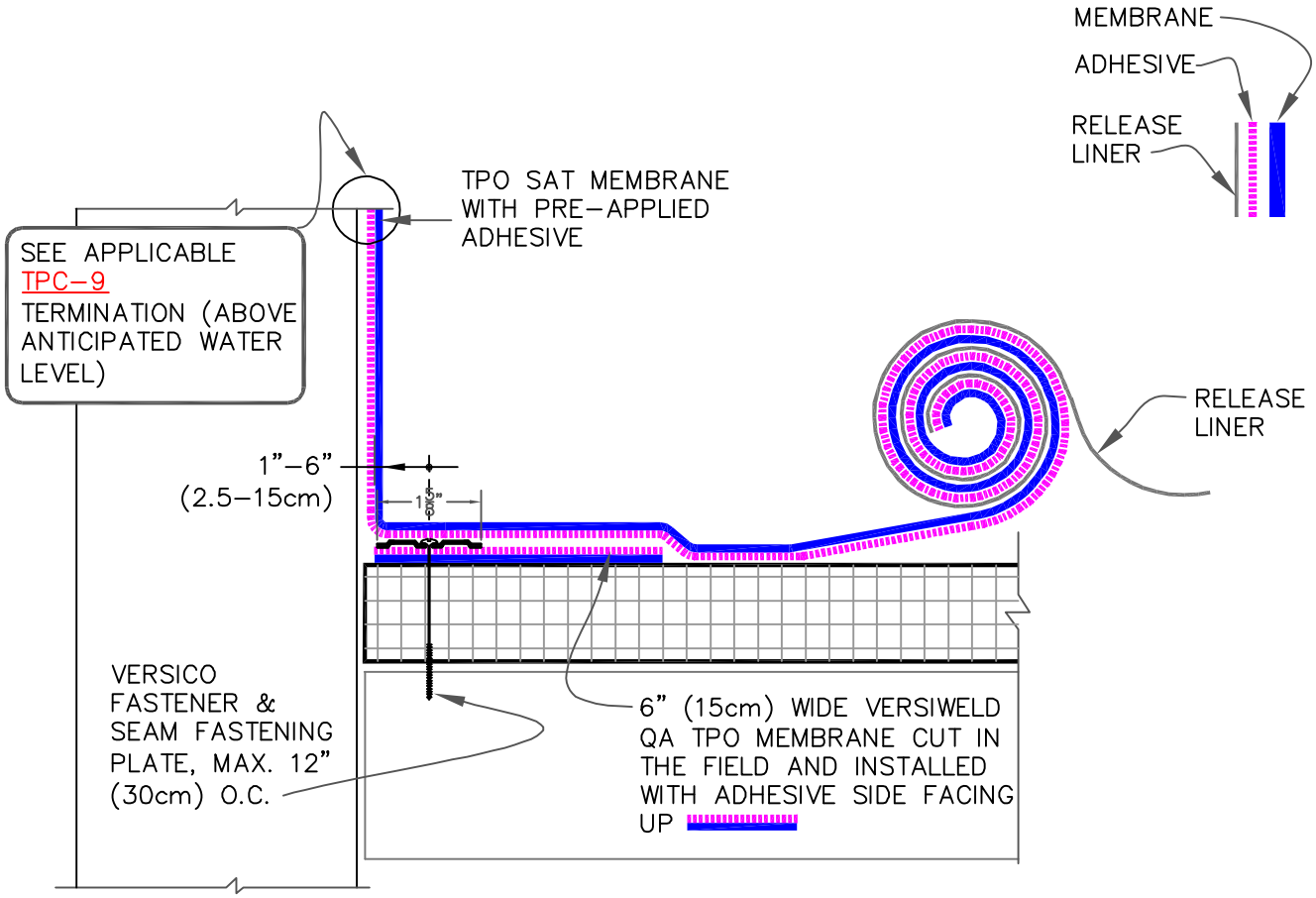

NOTE:

1. WIND SPEED GREATER THAN 90 MPH (145 KILOMETERS /HOURS)(40.3 METER PER SECOND) OR PROJECTS WITH 25 OR 30-YEAR WARRANTIES REQUIRE FASTENING @ 6"(15.2cm) O.C.

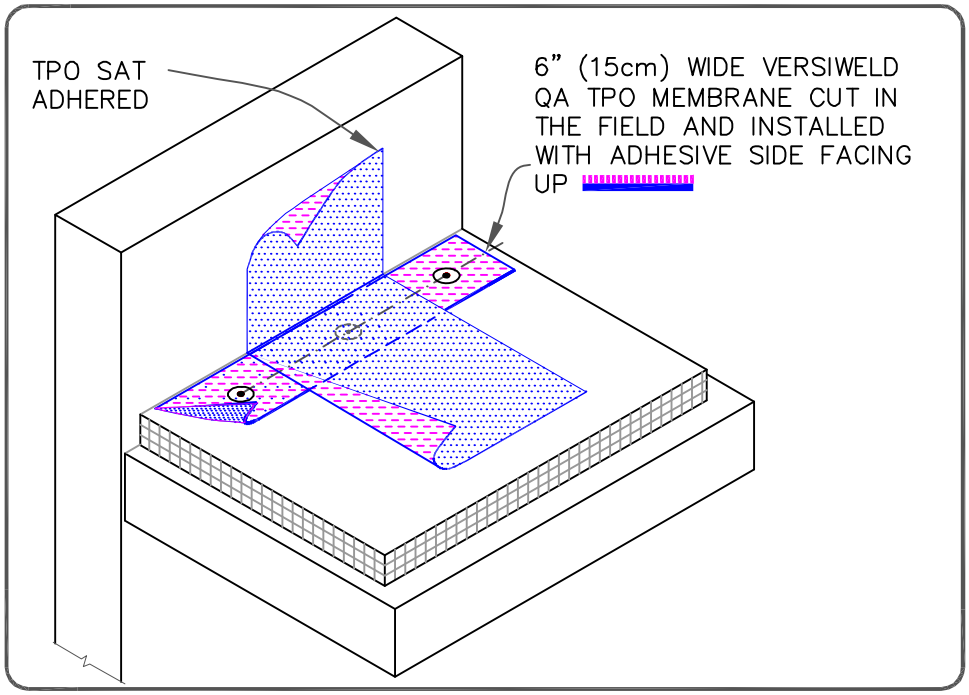

RUSS (REINFORCED UNIVERSAL SECUREMENT STRIP)

VERSICO ROOFING SYSTEMS
© 2024 VERSICO

VERSIWELD QA PARAPET FLASHING WITH VERSIWELD PS QA RTS

MAXIMUM WARRANTY: 30 YEARS

TPO MEMBRANE
APPROVED SUBSTRATE
0 SEE NOTE

PS (PRESSURE SENSITIVE)
P&S (PEEL & STICK)
QA (QUICK APPLIED)

THERMOPLASTIC ROOFING SYSTEM

TPC-12.8

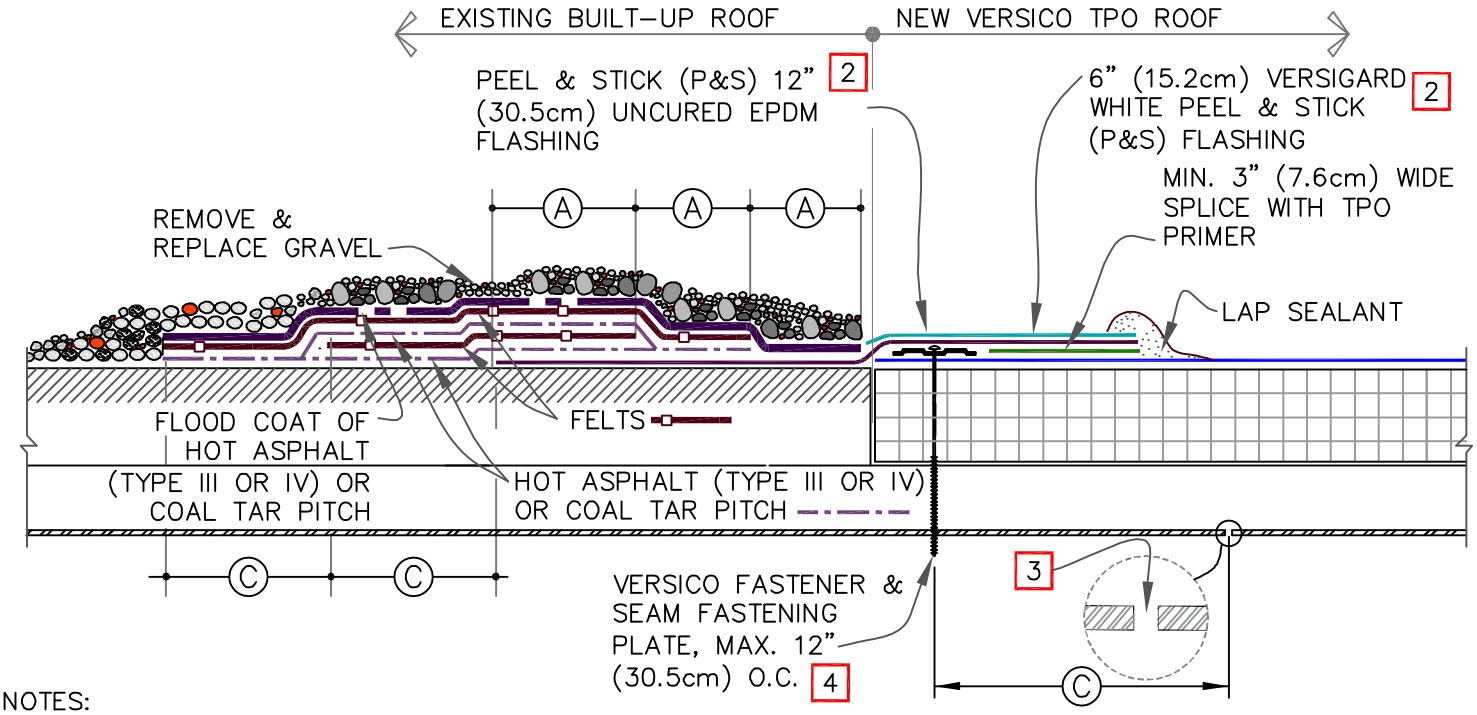

HOT TIE-IN OPTION

NOTES:

1. REMOVE ALL GRAVEL AT TIE-IN.
2. OVERLAY VERSIGARD P & S FLASHING WITH 6"(15cm) VERSIGARD WHITE P & S FLASHING TO REDUCE HEAT GAIN ON TPO MEMBRANE
3. IF FLUTES ARE PERPENDICULAR TO THE TIE-IN DRILL A 3/8" (1cm) DIAMETER WEEP HOLE INTO THE BOTTOM FLUTES OF THE STEEL DECK ALONG THE PERIMETER OF THE TIE-IN 6" (15cm) MINIMUM TO 12" (30cm) MAXIMUM FROM THE SEAM FASTENING PLATE.
4. IF WATER PONDS OR FLOWS OVER TIE-IN FROM BUR SURFACE, USE DETAIL TPC-13.2.

FASTENER TYPES ON MECHANICALLY FASTENED ROOF ASSEMBLY

DECK TYPE	OPTION	FASTENER	PLATE
STEEL	A	HPVX	HPVX
	B	HPV-XL	HPV-XL

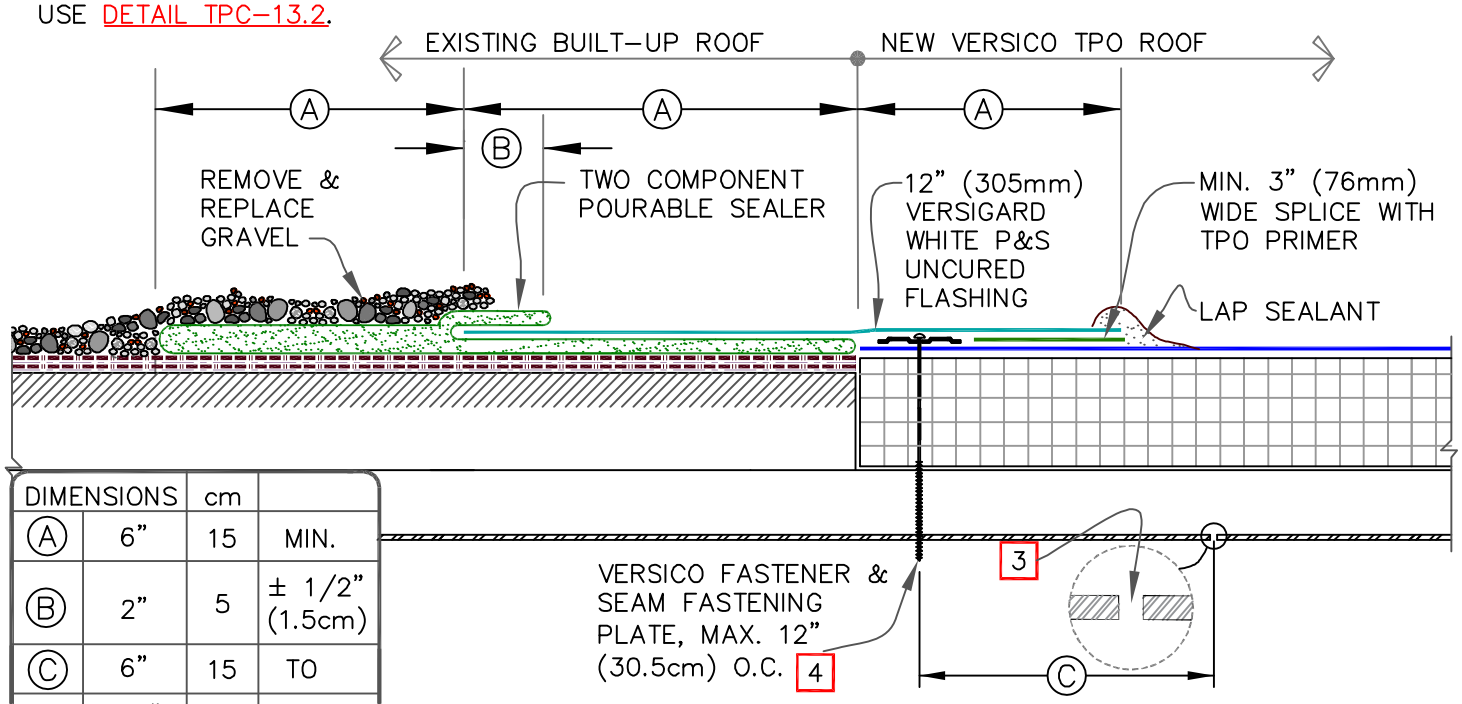

DIMENSIONS		cm	
A	6"	15	MIN.
B	2"	5	± 1/2" (1.5cm)
C	6"	15	TO
	12"	30	

COLD TIE-IN OPTION

VERSICO ROOFING SYSTEMS
© 2024 VERSICO

TPO TIE-IN TO BUILT-UP ROOFING OVER STEEL ROOF DECK

MAXIMUM WARRANTY: 30 YEARS

TPO MEMBRANE
APPROVED SUBSTRATE
0 → SEE NOTE
PS (PRESSURE SENSITIVE)
P&S (PEEL & STICK)
QA (QUICK APPLIED)

THERMOPLASTIC ROOFING SYSTEM

TPC-13.1

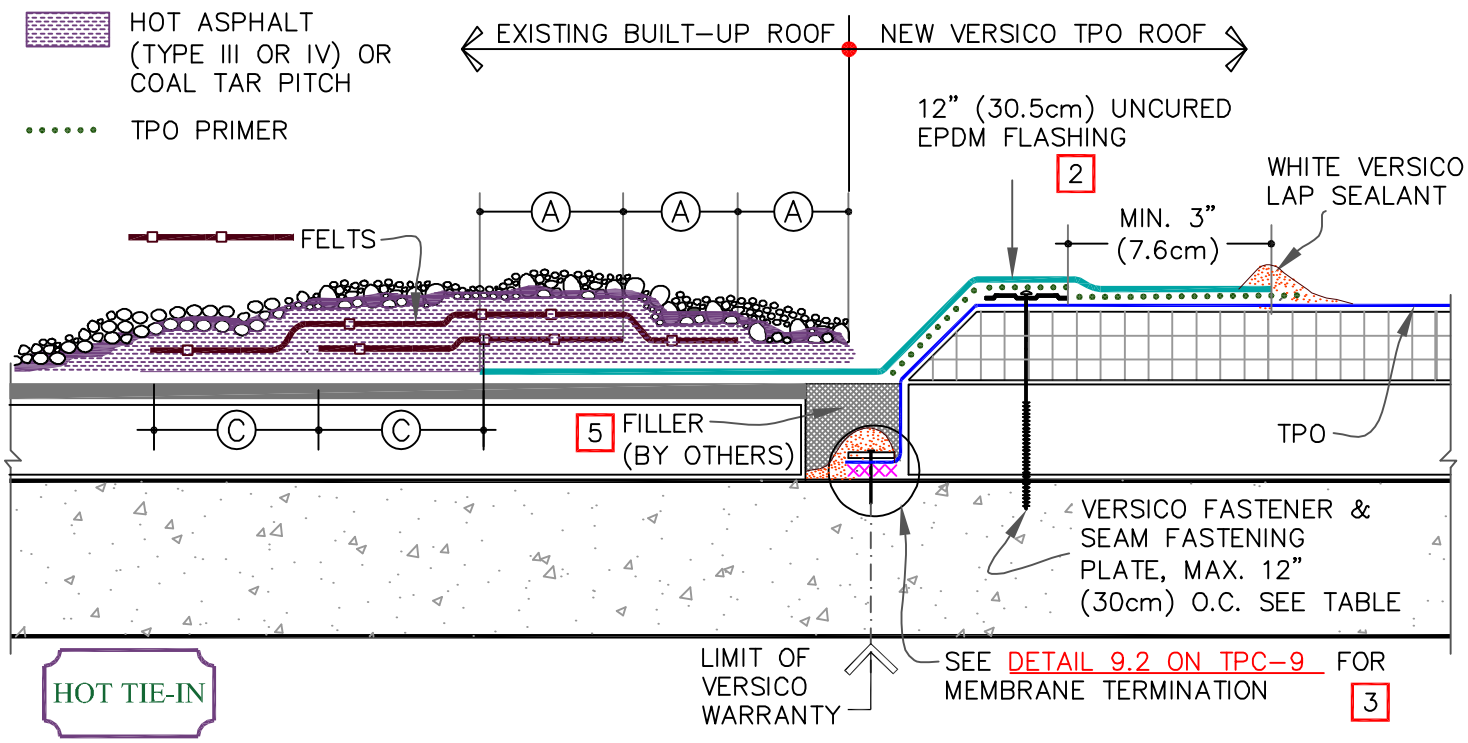

NOTES:

1. REMOVE ALL GRAVEL AT TIE-IN.
2. SPLICE TWO PIECES OF WHITE PRESSURE -SENSITIVE UNCURED FLASHING TOGETHER TO ACHIEVE DESIRED WIDTH.
3. WATER CUT-OFF MASTIC MUST BE HELD UNDER CONSTANT COMPRESSION.
4. VERSICO IS NOT RESPONSIBLE FOR DAMAGE TO THE BUILT-UP ROOF OR STRUCTURAL DECK RESULTING FROM PONDED WATER; THIS DETAIL APPLIES TO RE-ROOFING WHEN A TEAR-OFF IS NOT SPECIFIED AND WAS DESIGNED TO PREVENT MIGRATION OF WATER WITHIN THE NEW ROOFING SYSTEM.
5. ACHIEVE SMOOTH SURFACE ON TOP.

FASTENER AND PLATE TYPE (STRUCTURAL CONCRETE DECK)

OPTION	FASTENER	PLATE
A	CD-10	HPVX
B	MP 14-10	HPVX

DIMENSIONS		cm	
A	6"	15	MIN.
B	2"	5	±1/2"(1.5cm)
C	6"	15	MIN.
C	12"	30	MAX.

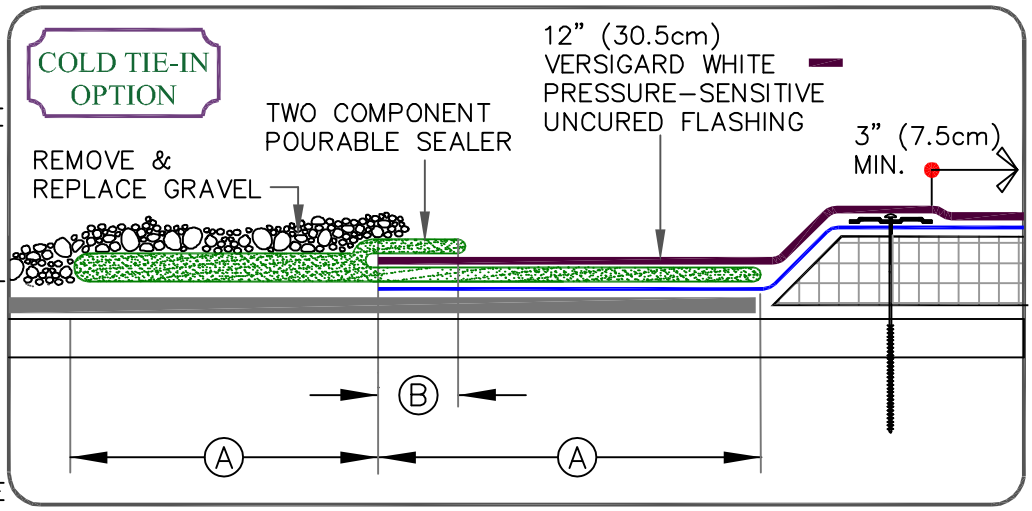

VERSICO ROOFING SYSTEMS
© 2024 VERSICO

TPO TIE-IN TO BUILT-UP ROOFING OVER CONCRETE ROOF DECK

MAXIMUM WARRANTY: 30 YEARS

TPO MEMBRANE
APPROVED SUBSTRATE
0 → SEE NOTE

PS (PRESSURE SENSITIVE)
P&S (PEEL & STICK)
QA (QUICK APPLIED)

THERMOPLASTIC ROOFING SYSTEM

TPC-13.2

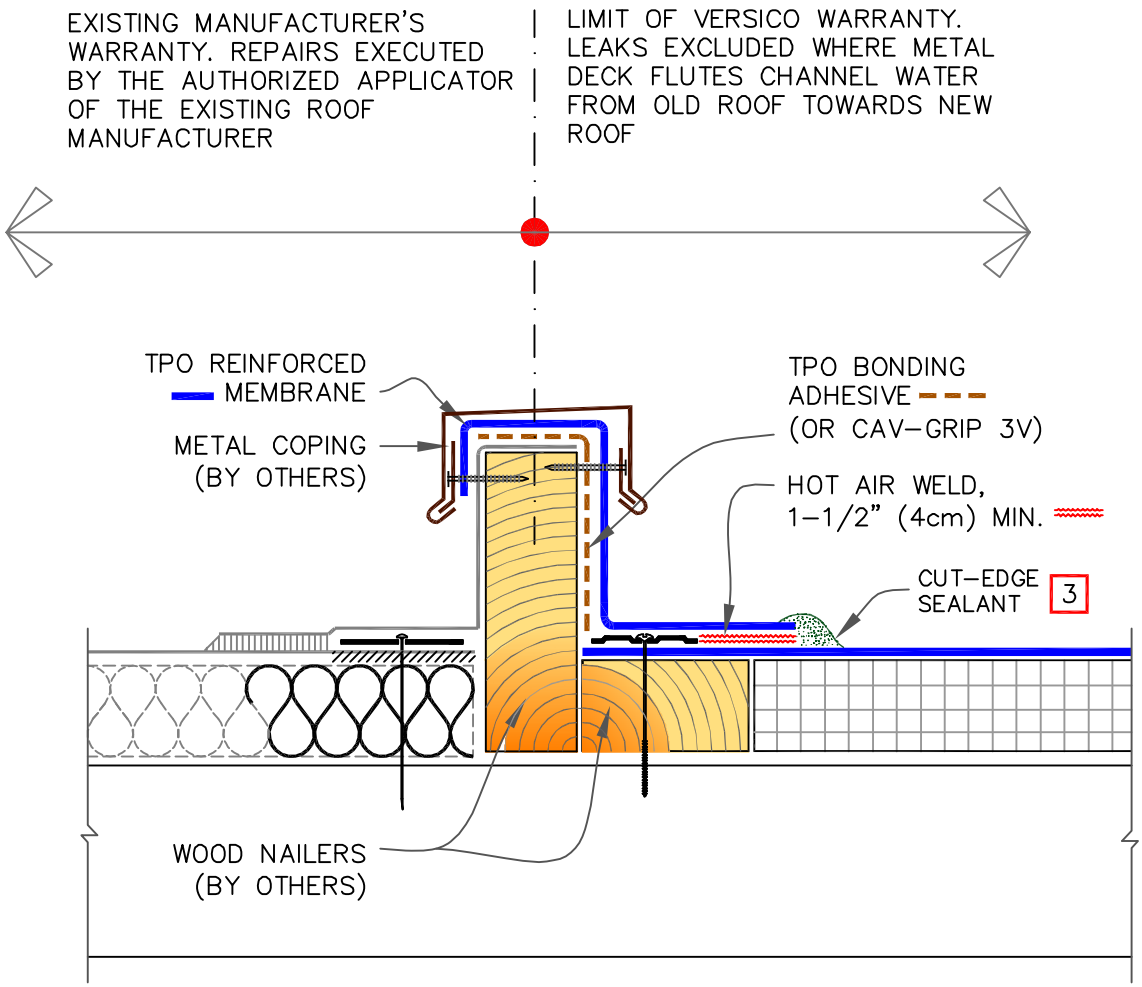

NOTES:

1. POSITION MEMBRANE FASTENING PLATES 1/2" (1.5cm) TO 1" (2.5cm) FROM EDGE OF DECK MEMBRANE.
2. ENSURE THE LOCATION OF CURB WILL NOT IMPEDE THE FLOW OF WATER AT EXISTING ADJACENT ROOF.
3. APPROXIMATELY 1/8" (0.5cm) DIAMETER BEAD OF CUT-EDGE SEALANT IS REQUIRED ON CUT EDGES OF REINFORCED TPO MEMBRANE.

VERSICO ROOFING SYSTEMS
© 2024 VERSICO

TPO TIE-IN TO EXISTING SINGLE PLY ROOF WITH CURB DETAIL

MAXIMUM WARRANTY: 30 YEARS

TPO MEMBRANE
APPROVED SUBSTRATE
0 → SEE NOTE

PS (PRESSURE SENSITIVE)
P&S (PEEL & STICK)
QA (QUICK APPLIED)

THERMOPLASTIC ROOFING SYSTEM

TPC-13.3

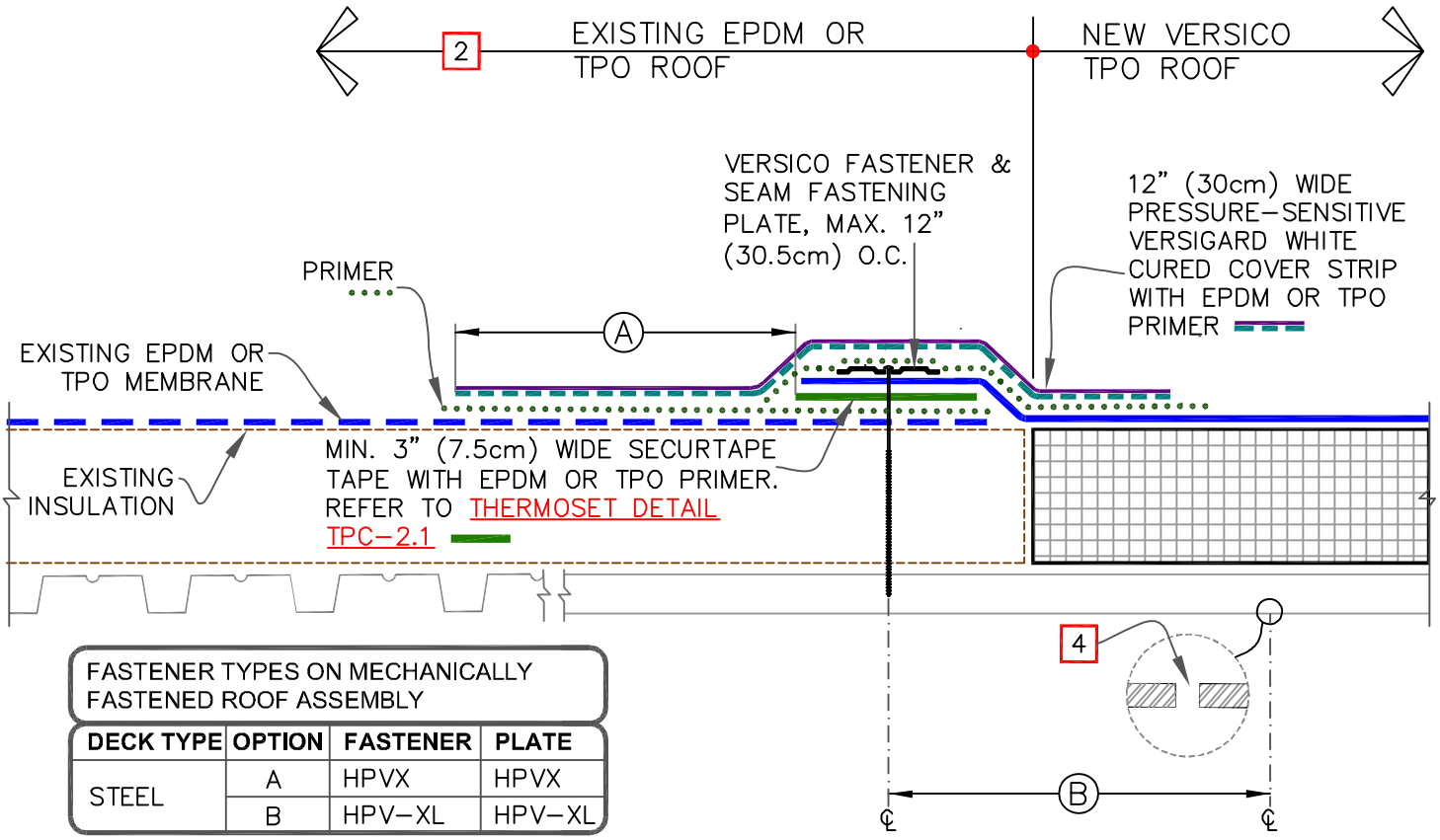

FASTENER TYPES ON MECHANICALLY FASTENED ROOF ASSEMBLY			
DECK TYPE	**OPTION**	**FASTENER**	**PLATE**
STEEL	A	HPVX	HPVX
	B	HPV-XL	HPV-XL

NOTES:

1. PRIOR TO SPLICING, CLEAN EXISTING EPDM OR TPO BY SCRUBBING THE SPLICE AREA WITH WEATHERED MEMBRANE CLEANER AND ALLOW TO DRY.
2. CONTACT MANUFACTURER OF EXISTING WARRANTED MEMBRANE ROOFING SYSTEM TO VERIFY ACCEPTANCE OF TIE-IN.
3. FOR EXISTING BALLASTED SYSTEMS BY OTHERS, CONSULT RESPECTIVE MANUFACTURER FOR ACCEPTABLE GRAVEL CONTAINMENT TO PREVENT GRAVEL MIGRATION.
4. IF FLUTES ARE PERPENDICULAR (AS DEPICTED), DRILL A 3/8" (1cm) DIAMETER WEEP HOLE INTO THE BOTTOM FLUTES OF THE STEEL DECK ALONG THE PERIMETER OF THE TIE-IN 6" (15cm) MINIMUM TO 12" (30cm) MAXIMUM FROM THE SEAM FASTENING PLATE. HOLES MAY NOT BE REQUIRED IF DECK SLOPES DOWN TOWARDS EXISTING ROOF.

DIMENSIONS		cm	
A	6"	15	
B	6"	15	MIN.
B	12"	30	MAX.

FASTENER & PRESSURE PLATE TYPES FOR DIFFERENT ROOF DECKS			
DECK TYPE	**OPTION**	**FASTENER**	**PLATE**
STEEL OR WOOD	A	HPVX	HPVX
	B	HPV-XL	HPV-XL
STRUCTURAL CONCRETE	A	CD-10	HPVX
	B	MP 14-10	HPVX

VERSICO ROOFING SYSTEMS
© 2024 VERSICO

TPO TIE-IN TO EXISTING EPDM / TPO MEMBRANE

MAXIMUM WARRANTY: 30 YEARS

TPO MEMBRANE
APPROVED SUBSTRATE
0 SEE NOTE
PS (PRESSURE SENSITIVE)
P&S (PEEL & STICK)
QA (QUICK APPLIED)

THERMOPLASTIC ROOFING SYSTEM

TPC-13.4

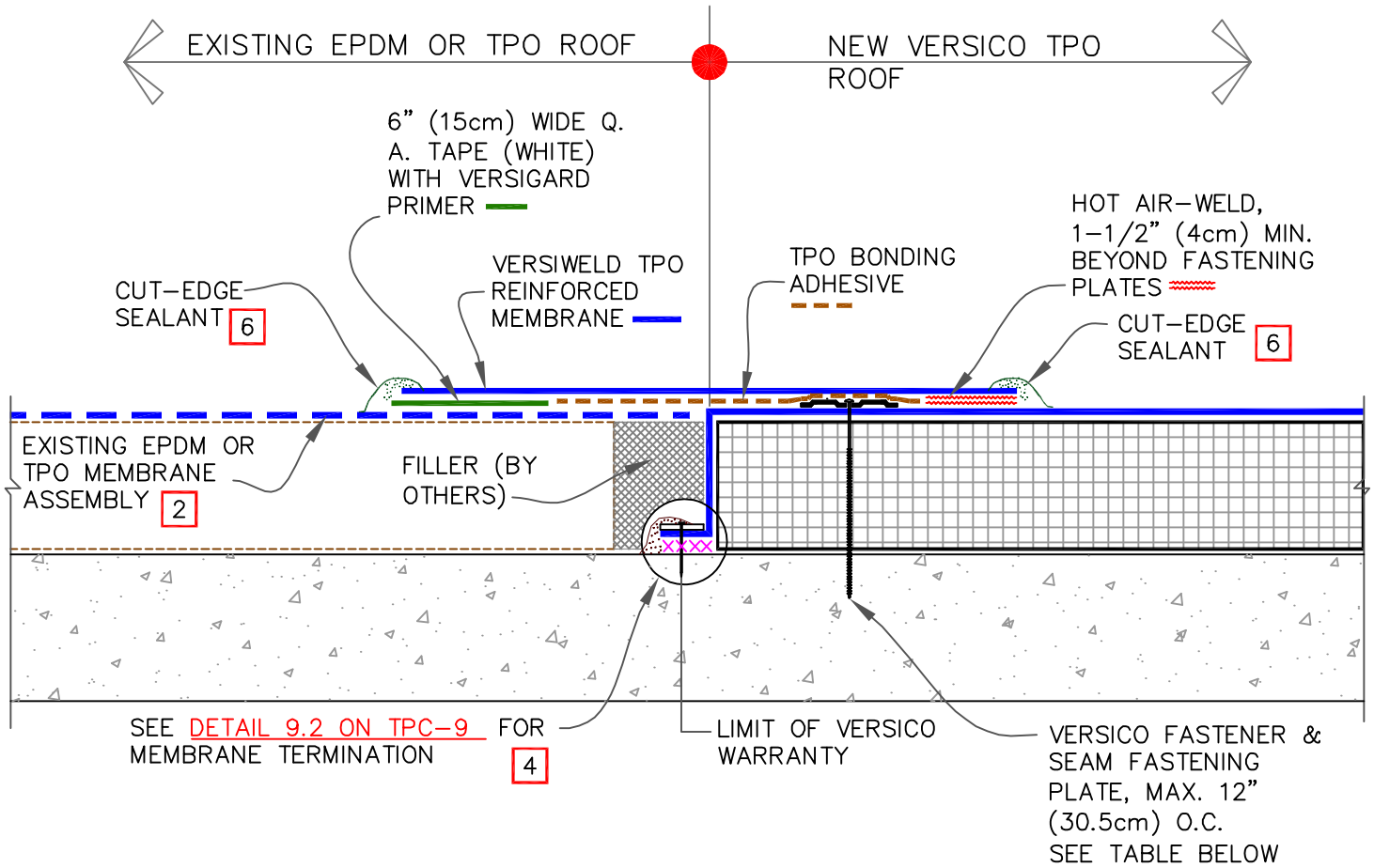

NOTES:

1. PRIOR TO SPLICING, CLEAN EXISTING EPDM OR TPO MEMBRANE BY SCRUBBING THE SPLICE AREA WITH WEATHERED MEMBRANE CLEANER AND ALLOW TO DRY.
2. CONTACT MANUFACTURER OF EXISTING WARRANTED MEMBRANE ROOFING SYSTEM TO VERIFY ACCEPTANCE OF TIE-IN.
3. ON EXISTING BALLASTED SYSTEMS, CONSULT RESPECTIVE MANUFACTURER FOR ACCEPTABLE GRAVEL CONTAINMENT TO PREVENT GRAVEL MIGRATION.
4. WATER CUT-OFF MASTIC MUST BE HELD UNDER CONSTANT COMPRESSION.
5. WHEN RE-ROOFING OVER PRE-CAST CONCRETE, APPLY LIBERAL BEAD OF WATER CUT-OFF MASTIC IN THE JOINTS TO PREVENT MOISTURE MIGRATION.
6. APPROXIMATELY 1/8" (0.5cm) DIAMETER BEAD OF CUT-EDGE SEALANT IS REQUIRED ON CUT EDGES OF REINFORCED TPO MEMBRANE.

FASTENER TYPES

DECK TYPE	OPTION	FASTENER	PLATE
STRUCTURAL CONCRETE	A	CD-10	HPVX
	B	MP 14-10	HPVX

VERSICO ROOFING SYSTEMS
© 2024 VERSICO

TPO TIE-IN ON CONCRETE DECK

MAXIMUM WARRANTY: 30 YEARS

TPO MEMBRANE
APPROVED SUBSTRATE
0 → SEE NOTE

PS (PRESSURE SENSITIVE)
P&S (PEEL & STICK)
QA (QUICK APPLIED)

THERMOPLASTIC ROOFING SYSTEM

TPC-13.5

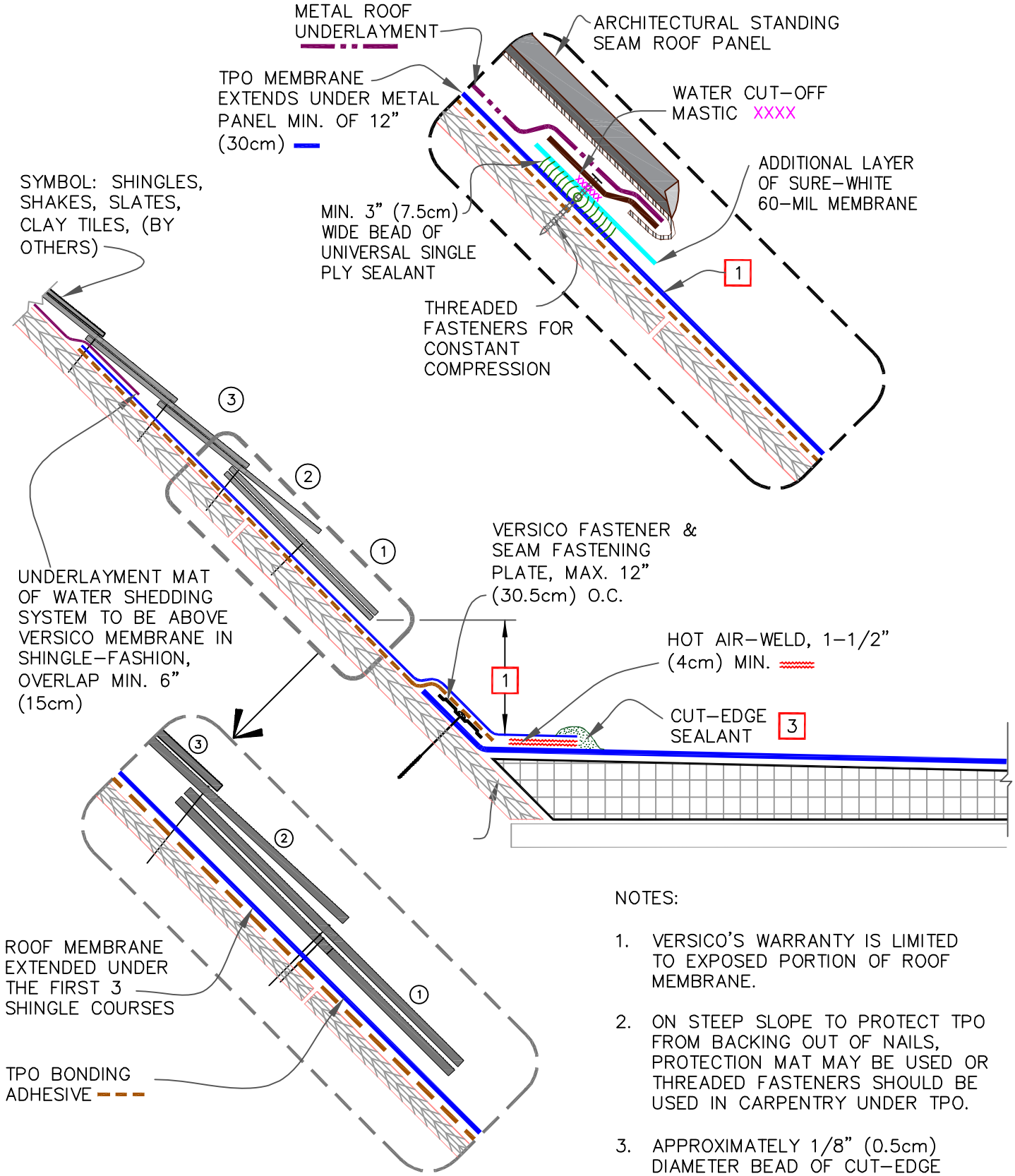

NOTES:

1. VERSICO'S WARRANTY IS LIMITED TO EXPOSED PORTION OF ROOF MEMBRANE.
2. ON STEEP SLOPE TO PROTECT TPO FROM BACKING OUT OF NAILS, PROTECTION MAT MAY BE USED OR THREADED FASTENERS SHOULD BE USED IN CARPENTRY UNDER TPO.
3. APPROXIMATELY 1/8" (0.5cm) DIAMETER BEAD OF CUT-EDGE SEALANT IS REQUIRED ON CUT EDGES OF REINFORCED TPO MEMBRANE.

VERSICO ROOFING SYSTEMS
© 2024 VERSICO

TPO TIE-IN TO SHINGLED ROOF

MAXIMUM WARRANTY: 30 YEARS

TPO MEMBRANE
APPROVED SUBSTRATE
0 → SEE NOTE

PS (PRESSURE SENSITIVE)
P&S (PEEL & STICK)
QA (QUICK APPLIED)

THERMOPLASTIC ROOFING SYSTEM

TPC-13.6

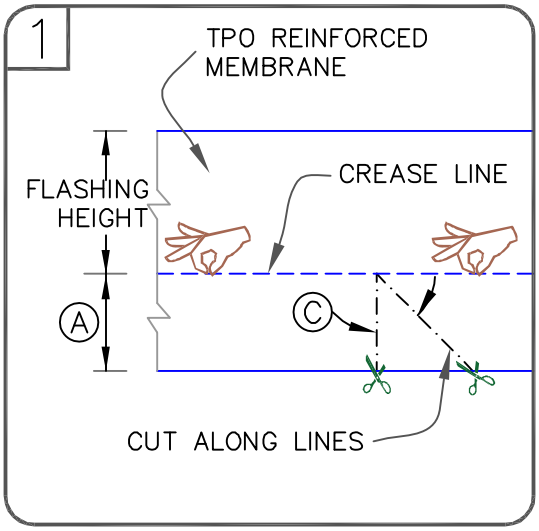

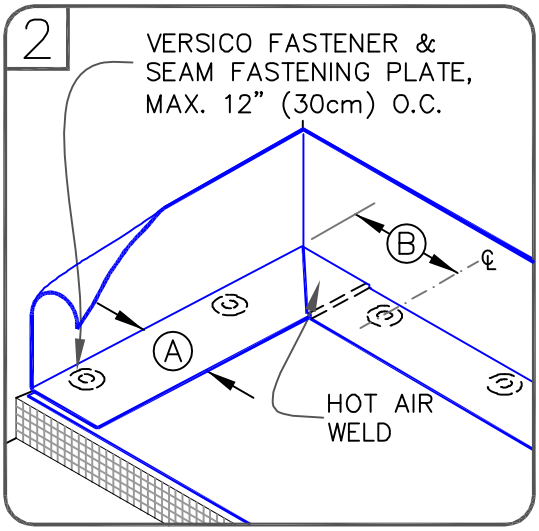

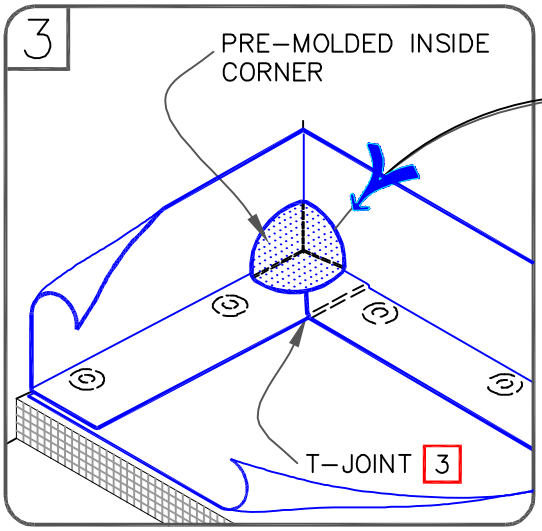

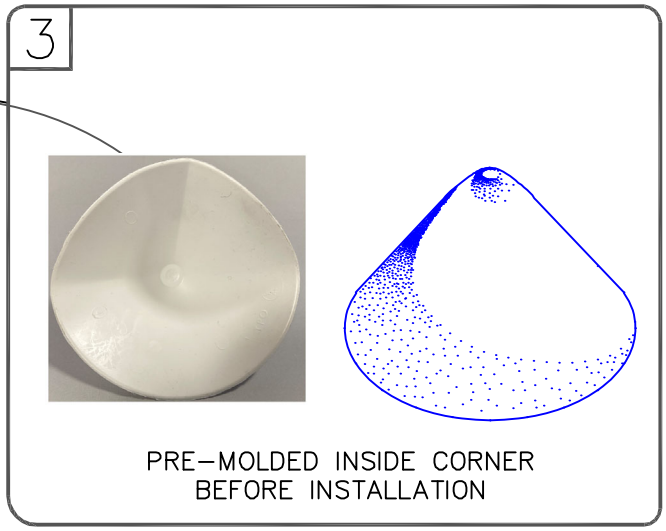

NOTES:

1. POSITION FASTENING PLATES 6" TO 9" (15 TO 23cm) FROM THE CORNER AND 1/2" TO 1" (1.5 TO 2.5cm) FROM EDGE OF MEMBRANE.

2. REFER TO VERSICO SPECIFICATIONS FOR ACCEPTABLE VERSICO FASTENERS AND PLATES.

3. WHEN USING 60-MIL TPO OR 80-MIL, APPLY A 4-1/2" (11.5cm) DIAMETER "T-JOINT" COVER AT ALL FIELD SPLICE INTERSECTIONS.

4. APPROXIMATELY 1/8" (0.5cm) DIAMETER BEAD OF CUT-EDGE SEALANT IS REQUIRED ON CUT EDGES OF REINFORCED TPO MEMBRANE.

DIMENSIONS		cm	
A	6"	15	APPROX.
B	6"-9"	15-23	
C	45-DEGREES APPROX.		

VERSICO ROOFING SYSTEMS
© 2024 VERSICO

PRE-MOLDED INSIDE CORNER FLASHING

MAXIMUM WARRANTY: 30 YEARS

TPO MEMBRANE
APPROVED SUBSTRATE
0 → SEE NOTE

PS (PRESSURE SENSITIVE)
P&S (PEEL & STICK)
QA (QUICK APPLIED)

THERMOPLASTIC ROOFING SYSTEM

TPC-15.1

CAUTION

DETAIL NOT FOR USE ON 25 OR 30-YEAR WARRANTY PROJECTS, PRE-FABRICATED/PRE-MOLDED ACCESSORIES MUST BE UTILIZED. ACCEPTABLE FLASHING SHALL CONFORM WITH TPO UNIVERSAL DETAIL TPC-15.1 OR TPC-15.7.

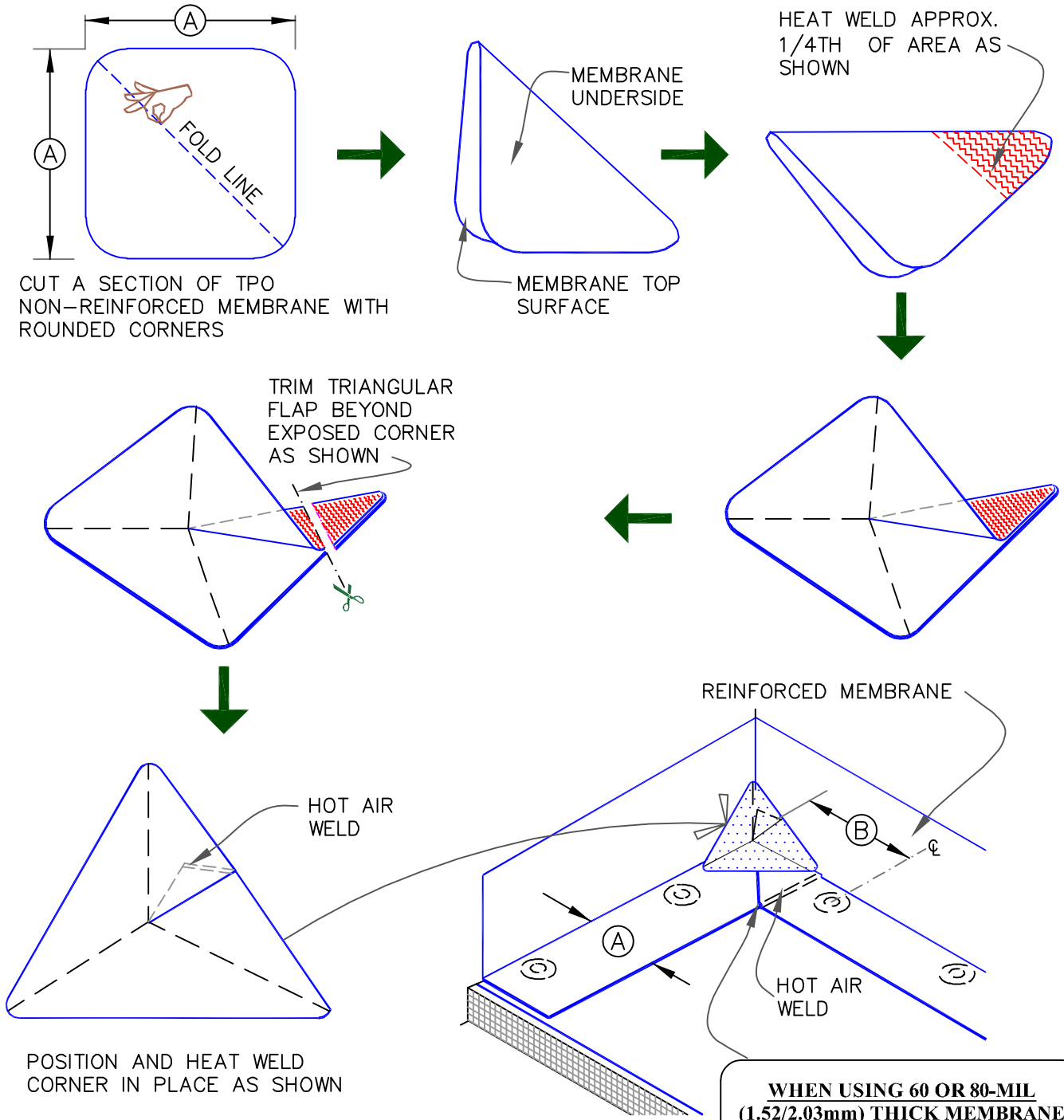

WHEN USING 60 OR 80-MIL (1.52/2.03mm) THICK MEMBRANE
APPLY A 4-1/2" (11.8cm) DIAMETER "T-JOINT" COVER AT FIELD SPLICE INTERSECTIONS, CENTRALLY ALIGNED.

DIMENSIONS		cm	
A	6"	15	APPROX.
B	6"-9"	15-23	

VERSICO ROOFING SYSTEMS
© 2024 VERSICO

FIELD FABRICATED INSIDE CORNER FLASHING

MAXIMUM WARRANTY: 20 YEARS

TPO MEMBRANE
APPROVED SUBSTRATE
0 → SEE NOTE

PS (PRESSURE SENSITIVE)
P&S (PEEL & STICK)
QA (QUICK APPLIED)

THERMOPLASTIC ROOFING SYSTEM

TPC-15.2

1

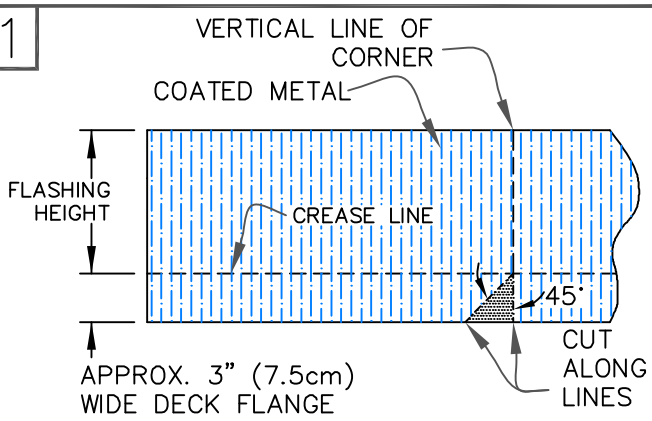

CREASE COATED METAL FLASHING ALONG DASHED LINES AFTER CUTTING AND REMOVING SHADED TRIANGLE.

2

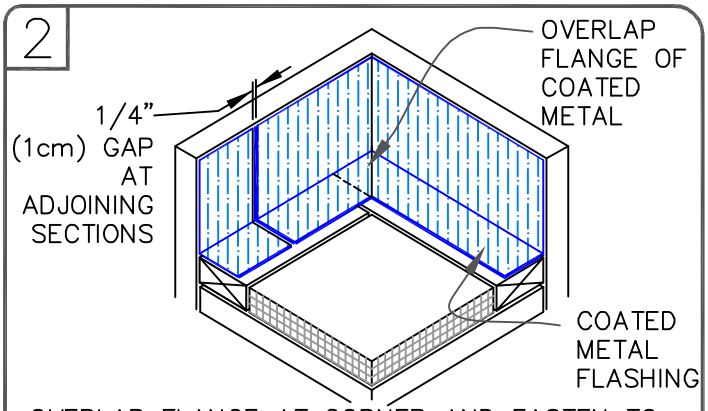

OVERLAP FLANGE AT CORNER AND FASTEN TO WOOD NAILERS USING 1–1/2" (4cm) RING SHANK NAILS SPACED 6" (15cm) O.C., STAGGERED 1/2" (1.5cm).

3

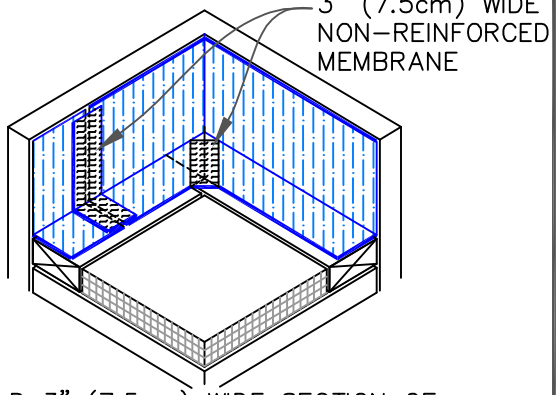

HEAT WELD 3" (7.5cm) WIDE SECTION OF REINFORCED MEMBRANE OVER VERTICAL JOINT IN COATED METAL AND OVER CUT EDGE AT CORNER AS SHOWN.

4

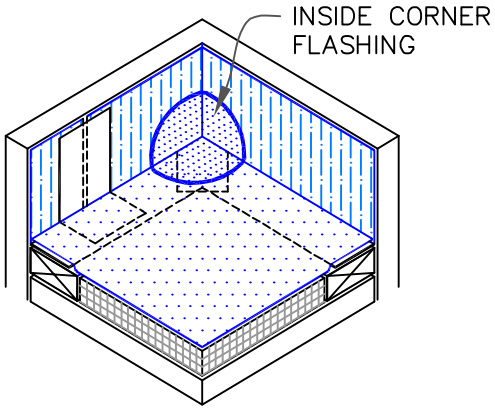

INSTALL FIELD MEMBRANE AND HEAT WELD TO FLANGE OF COATED METAL. ALSO INSTALL INSIDE CORNER FLASHING PER TPO UNIVERSAL DETAILS: TPC–15.1 OR TPC–15.2 OR TPC–15.7

5

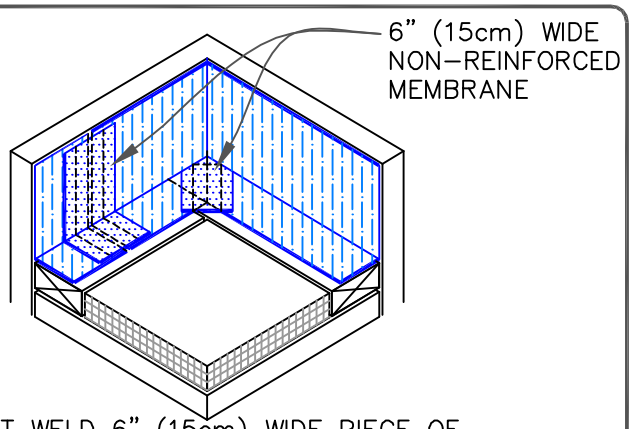

HEAT WELD 6" (15cm) WIDE PIECE OF NON–REINFORCED MEMBRANE OVER 3" WIDE REINFORCED MEMBRANE, AFTER ROOF MEMBRANE INSTALLATION

SEQUENCE:

1. 3" (7.6cm) REINFORCED MEMBRANE STRIPPING.
2. FIELD MEMBRANE.
3. TOP 6" (15.2cm) NON–REINFORCED MEMBRANE STRIPPING.

NOTES:

1. FASTEN COATED METAL FLASHING TO WOOD NAILERS USING 1–1/2" (4cm) MIN. RING SHANK NAILS SPACED 6" (15cm) ON CENTER AND STAGGERED APPROX. 1/2" (1.5cm).
2. COORDINATE THIS DETAIL WITH TPC–12.3 FOR ADDITIONAL INFORMATION.
3. APPROXIMATELY 1/8" (0.5cm) DIAMETER BEAD OF CUT–EDGE SEALANT IS REQUIRED ON CUT EDGES OF REINFORCED TPO MEMBRANE.

VERSICO ROOFING SYSTEMS

© 2024 VERSICO

INSIDE CORNER WITH VERSIWELD TPO COATED METAL WALL FLASHING

MAXIMUM WARRANTY: 30 YEARS

TPO MEMBRANE
APPROVED SUBSTRATE
0 → SEE NOTE

PS (PRESSURE SENSITIVE)
P&S (PEEL & STICK)
QA (QUICK APPLIED)

THERMOPLASTIC ROOFING SYSTEM

TPC–15.3

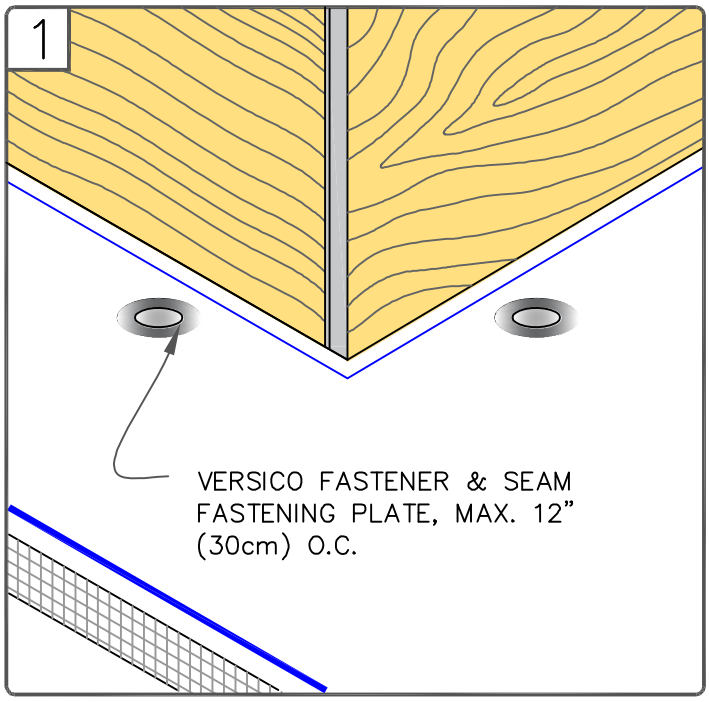

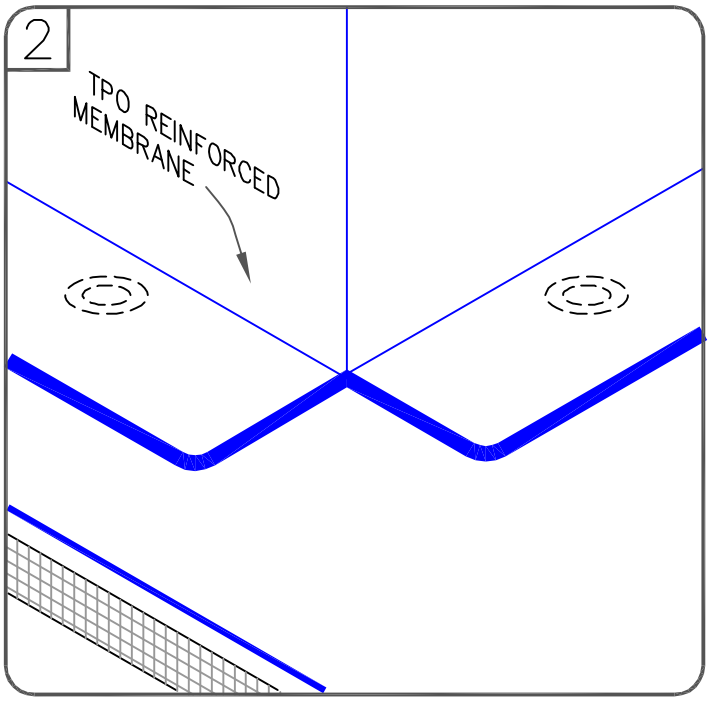

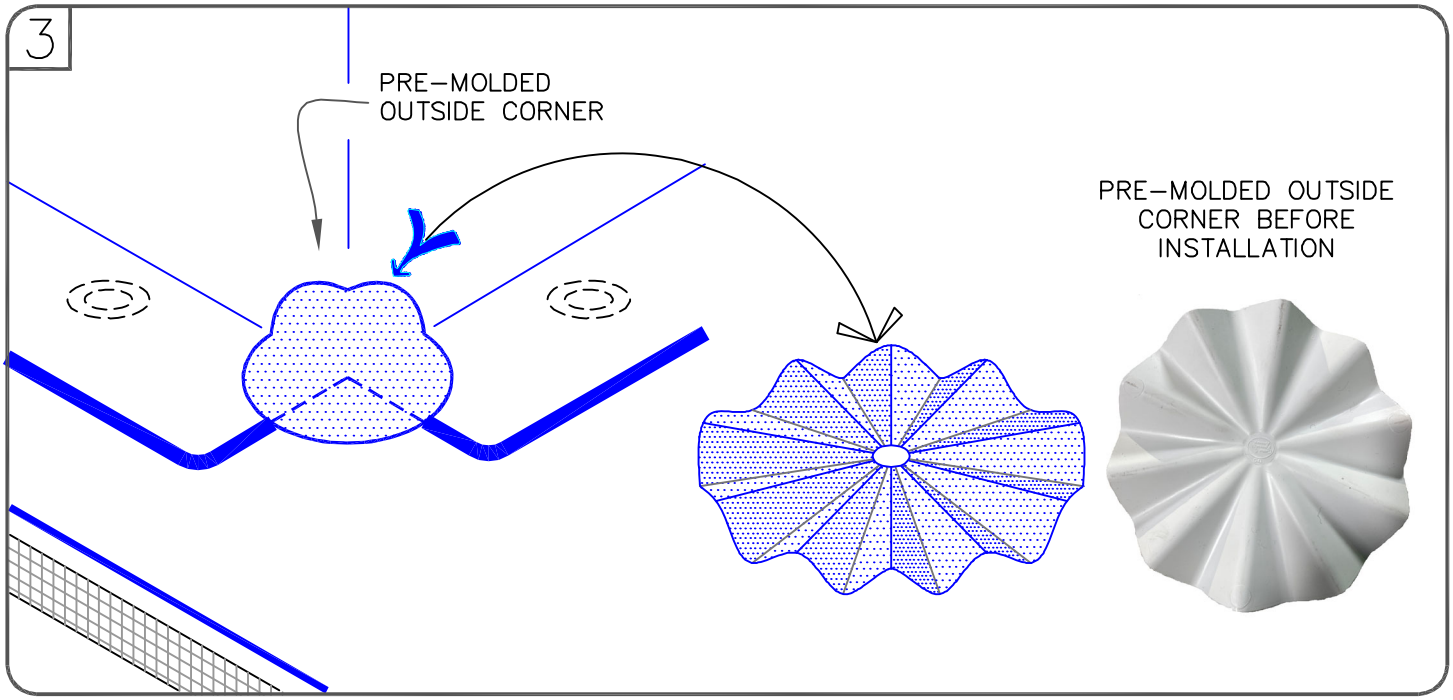

NOTES:

1. POSITION FASTENING PLATES 6"(15cm) FROM THE CORNER AND 1/2" TO 1" (1.5 TO 2.5cm) FROM EDGE OF MEMBRANE.

2. REFER TO VERSICO SPECIFICATIONS FOR ACCEPTABLE VERSICO FASTENERS AND PLATES.

3. APPROXIMATELY 1/8" (0.5cm) DIAMETER BEAD OF CUT-EDGE SEALANT IS REQUIRED ON CUT EDGES OF REINFORCED TPO MEMBRANE.

VERSICO ROOFING SYSTEMS
© 2024 VERSICO

PRE-MOLDED OUTSIDE CORNER FLASHING

MAXIMUM WARRANTY: 30 YEARS

TPO MEMBRANE
APPROVED SUBSTRATE
0 SEE NOTE

PS (PRESSURE SENSITIVE)
P&S (PEEL & STICK)
QA (QUICK APPLIED)

THERMOPLASTIC ROOFING SYSTEM

TPC-15.4

CAUTION

DETAIL NOT FOR USE ON 25 OR 30-YEAR WARRANTY PROJECTS, PRE-FABRICATED/PRE-MOLDED ACCESSORIES MUST BE UTILIZED. ACCEPTABLE FLASHING SHALL CONFORM WITH TPO UNIVERSAL DETAIL TPC-15.4 OR TPC-15.7.

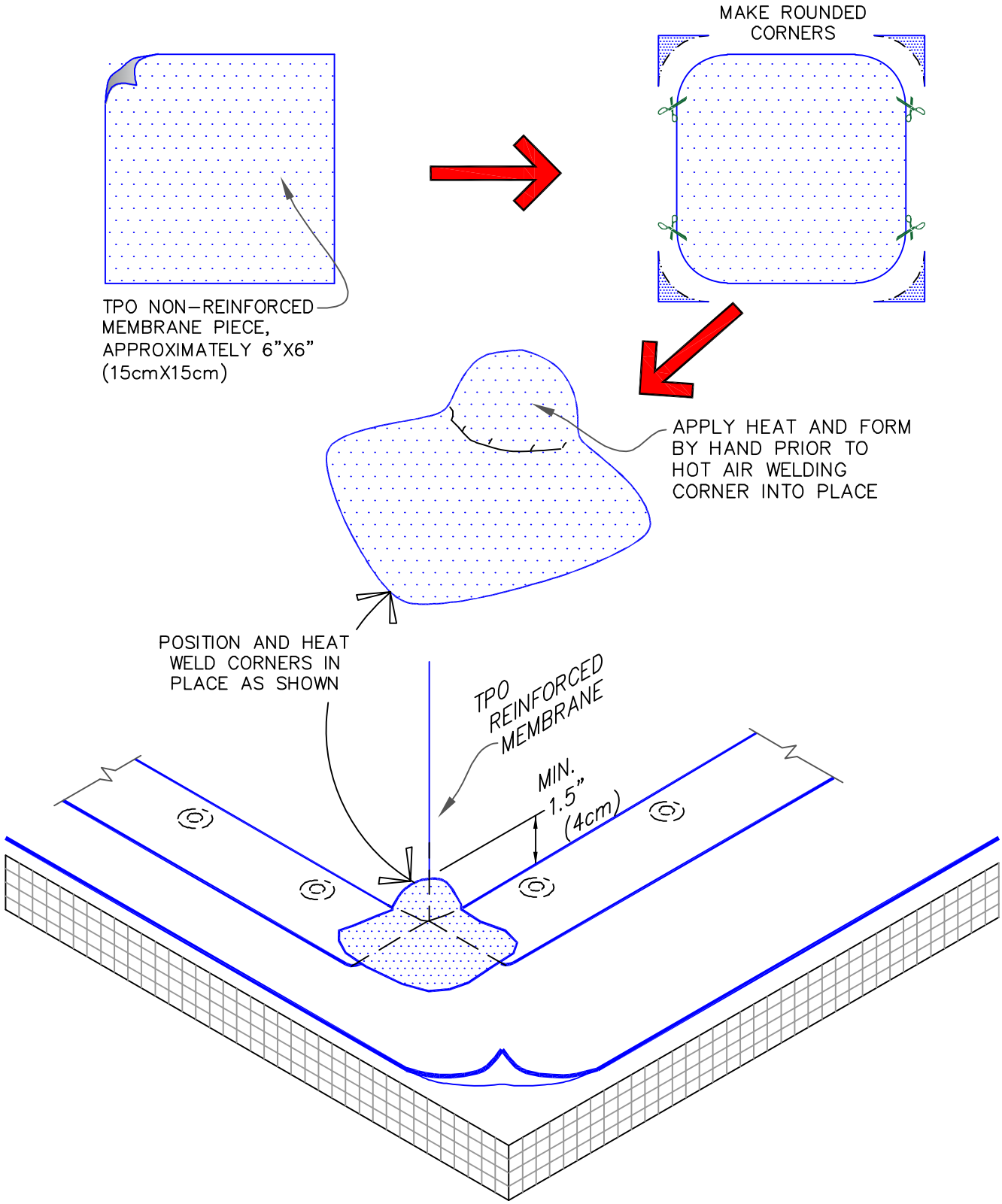

VERSICO ROOFING SYSTEMS
© 2024 VERSICO

FIELD FABRICATED OUTSIDE CORNER FLASHING

MAXIMUM WARRANTY: 20 YEARS

TPO MEMBRANE
APPROVED SUBSTRATE
0 → SEE NOTE

PS (PRESSURE SENSITIVE)
P&S (PEEL & STICK)
QA (QUICK APPLIED)

THERMOPLASTIC ROOFING SYSTEM

TPC-15.5

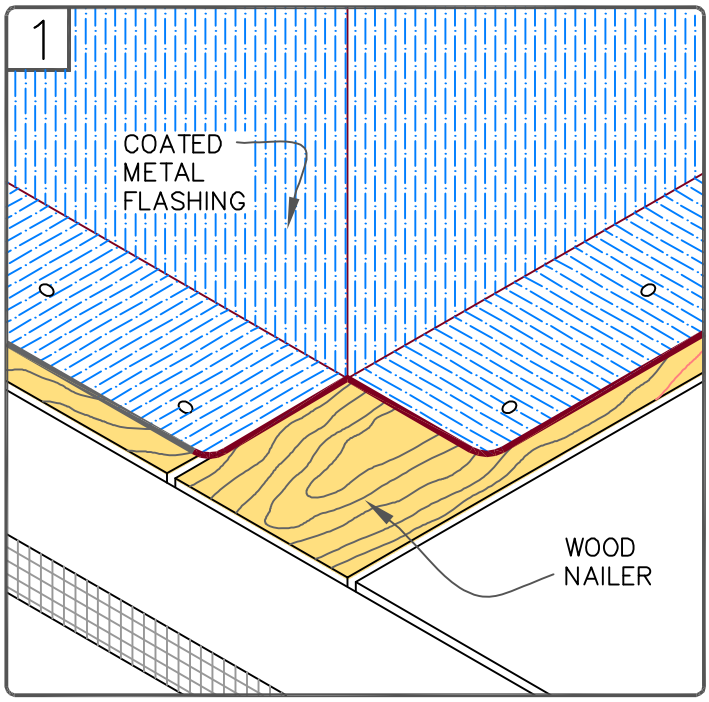

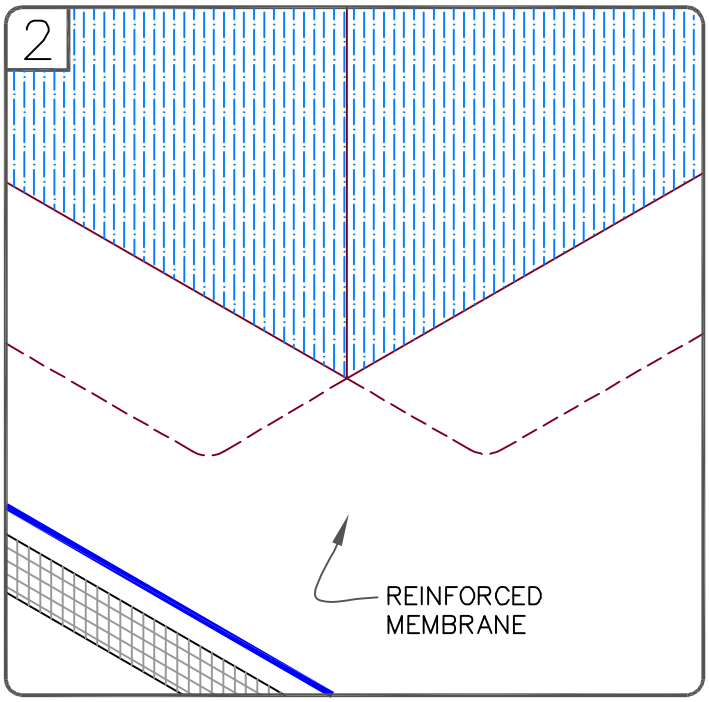

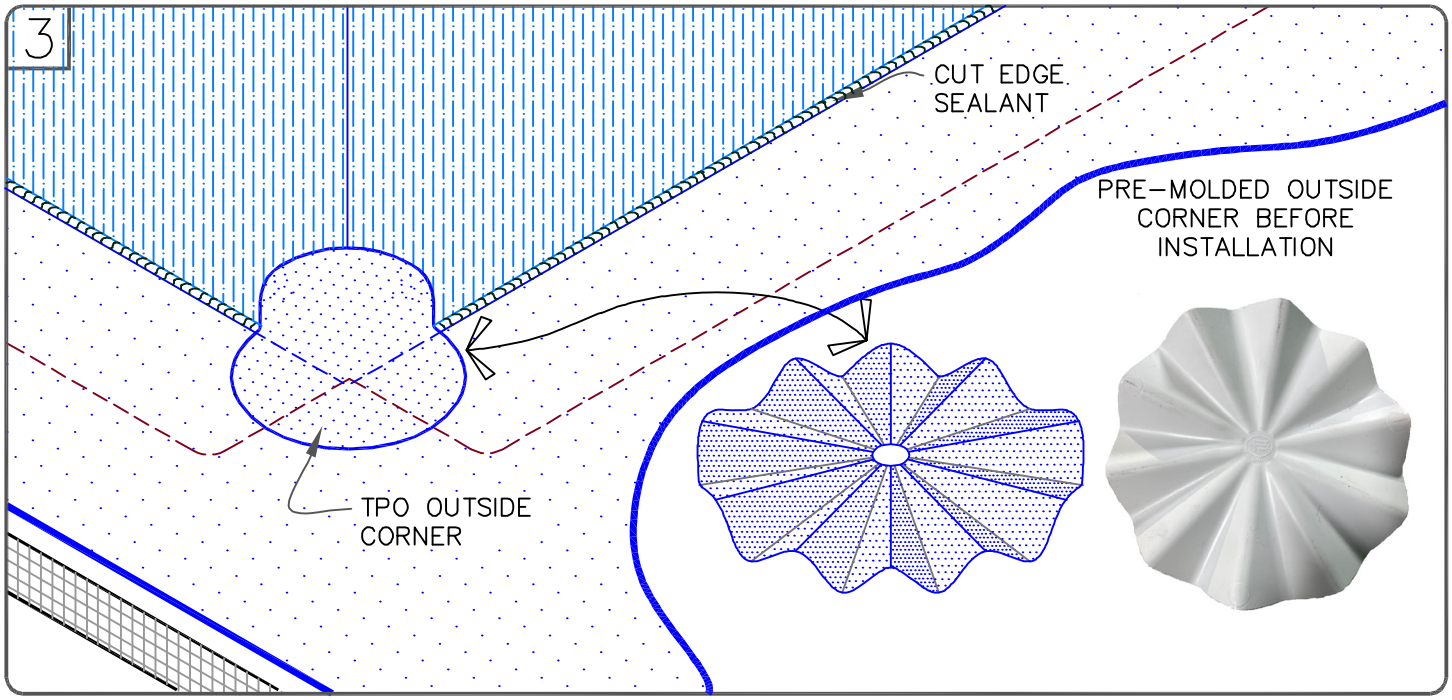

NOTES:

1. FASTEN COATED METAL FLASHING TO WOOD NAILERS USING 1-1/2" (4cm) MIN. RING SHANK NAILS SPACED 6" (15cm) ON CENTER AND STAGGERED APPROX. 1/2" (1.5cm).

2. REFER TO TPO DETAIL TPC-5.2 FOR FLASHING VERTICAL JOINTS IN COATED METAL.

VERSICO ROOFING SYSTEMS

© 2024 VERSICO

OUTSIDE CORNER WITH TPO COATED METAL WALL FLASHING

MAXIMUM WARRANTY: 30 YEARS

TPO MEMBRANE
APPROVED SUBSTRATE
0 SEE NOTE

PS (PRESSURE SENSITIVE)
P&S (PEEL & STICK)
QA (QUICK APPLIED)

THERMOPLASTIC ROOFING SYSTEM

TPC-15.6

60-MIL THICK TPO, UNIVERSAL CORNERS CAN BE USED FOR 3 DIFFERENT CORNER CONDITIONS AS SHOWN BELOW

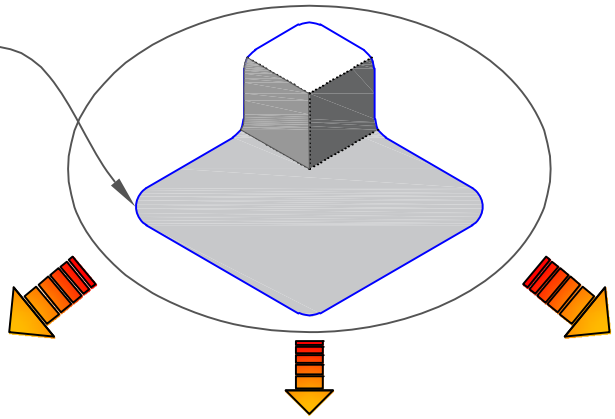

OPTION A

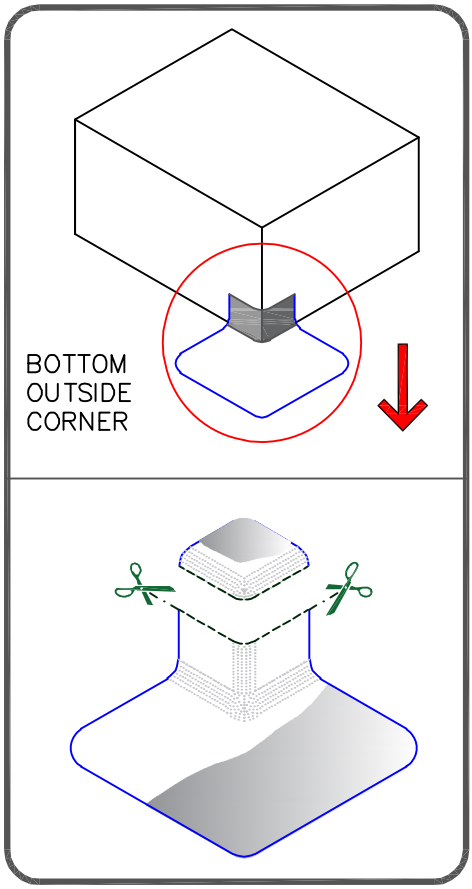

OPTION B

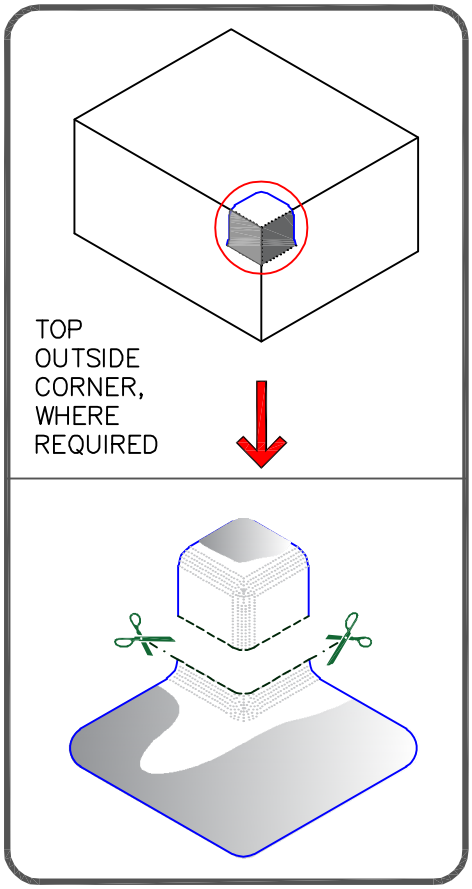

OPTION C

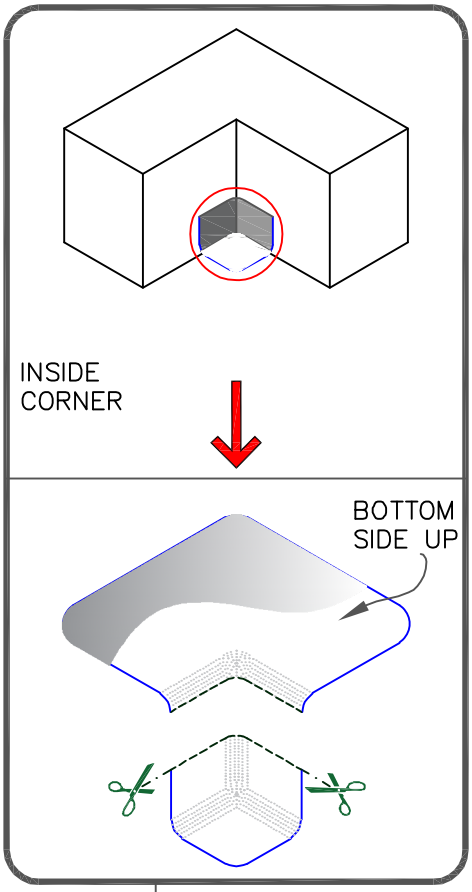

NOTES:

1. ROOF SYSTEMS MUST NOT HAVE FIELD FABRICATED OR BUILT-IN CANT STRIP.
2. REFER TO TECHNICAL DATA BULLETINS FOR COLOR AVAILABILITY.

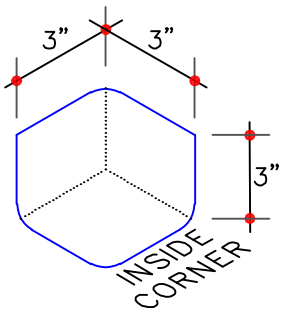

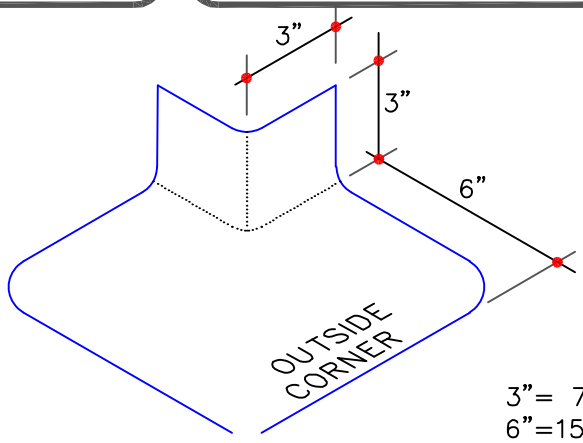

TYPICAL DIMENSIONS

3"= 7.5cm
6"=15cm

VERSICO ROOFING SYSTEMS
© 2024 VERSICO

TPO UNIVERSAL CORNERS–COMBINATION INSIDE & OUTSIDE CORNERS

MAXIMUM WARRANTY: 30 YEARS

TPO MEMBRANE
APPROVED SUBSTRATE
0 → SEE NOTE

PS (PRESSURE SENSITIVE)
P&S (PEEL & STICK)
QA (QUICK APPLIED)

THERMOPLASTIC ROOFING SYSTEM

TPC–15.7

CAUTION

MOLDED SEALANT POCKETS MUST BE USED IN CONJUNCTION WITH RAIN HOODS FOR PROJECTS WITH 25 AND 30-YEAR WARRANTIES.

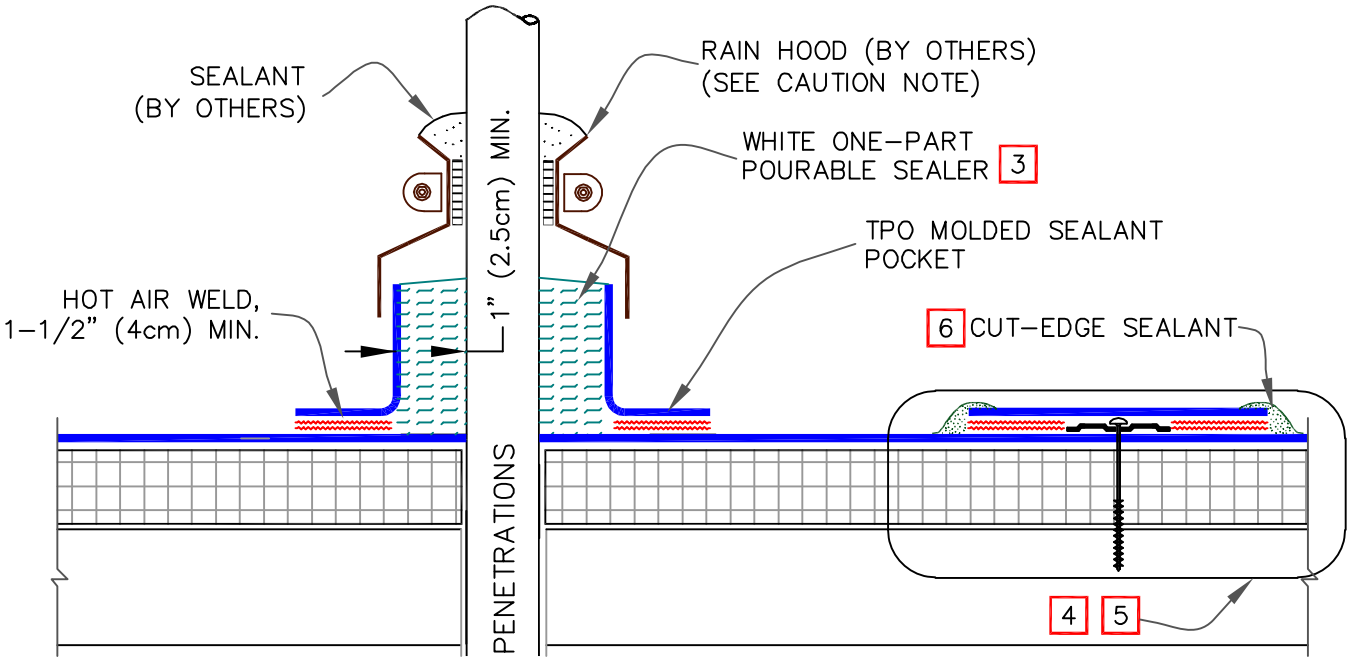

NOTES:

1. TEMPERATURE OF PIPE MUST NOT EXCEED 160˚ F (71˚ C).
2. WHEN USING TPO MOLDED SEALANT POCKET, TPO PRIMER MUST BE APPLIED TO ALL INSIDE SURFACES AND PENETRATIONS PRIOR TO FILLING WITH SEALANT.
3. FILL POCKET COMPLETELY WITH WHITE ONE-PART POURABLE SEALER UNTIL RIM IS COVERED WITH SEALANT; ENSURE ALL VOIDS ARE FILLED.
4. ON MECHANICALLY-ATTACHED SYSTEMS, INSTALL A MINIMUM OF 4 FASTENING PLATES AROUND SEALANT POCKETS WITH A DIAMETER UP TO 6" (15cm). ADDITIONAL FASTENING PLATES WILL BE REQUIRED FOR SEALANT POCKETS GREATER THAN 6" IN DIAMETER AND SHALL BE SPACED 12" (30cm) ON CENTER MAXIMUM.
5. REFER TO VERSICO SPECIFICATIONS FOR PROPER FASTENERS AND PLATES.
6. APPROXIMATELY 1/8" (0.5cm) DIAMETER BEAD OF CUT-EDGE SEALANT IS REQUIRED ON CUT EDGES OF REINFORCED TPO MEMBRANE.

PLACE MOLDED TPO SEALANT POCKET AROUND PENETRATION AND OVERLAP THE TWO SECTIONS

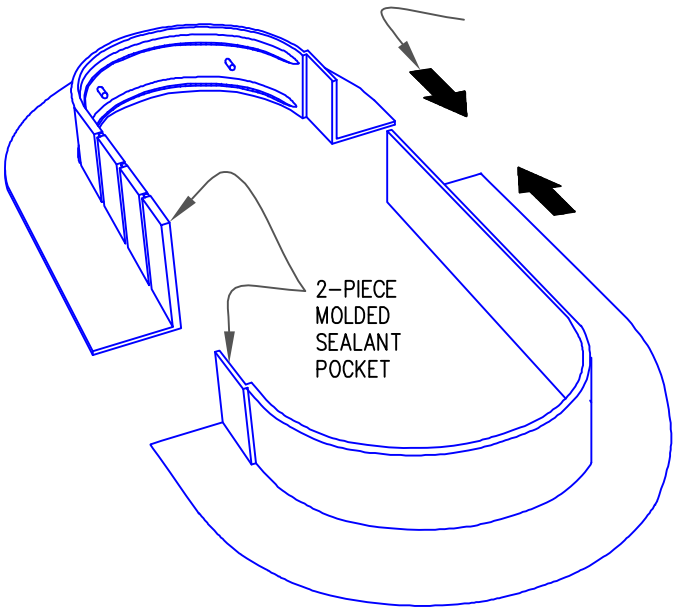

REFER TO PRODUCT DATA SHEET FOR STEP-BY-STEP INSTALLATION PROCEDURES

VERSICO ROOFING SYSTEMS

© 2024 VERSICO

MOLDED SEALANT POCKET

MAXIMUM WARRANTY: 30 YEARS

TPO MEMBRANE
APPROVED SUBSTRATE
0 → SEE NOTE

PS (PRESSURE SENSITIVE)
P&S (PEEL & STICK)
QA (QUICK APPLIED)

THERMOPLASTIC ROOFING SYSTEM

TPC-16.1

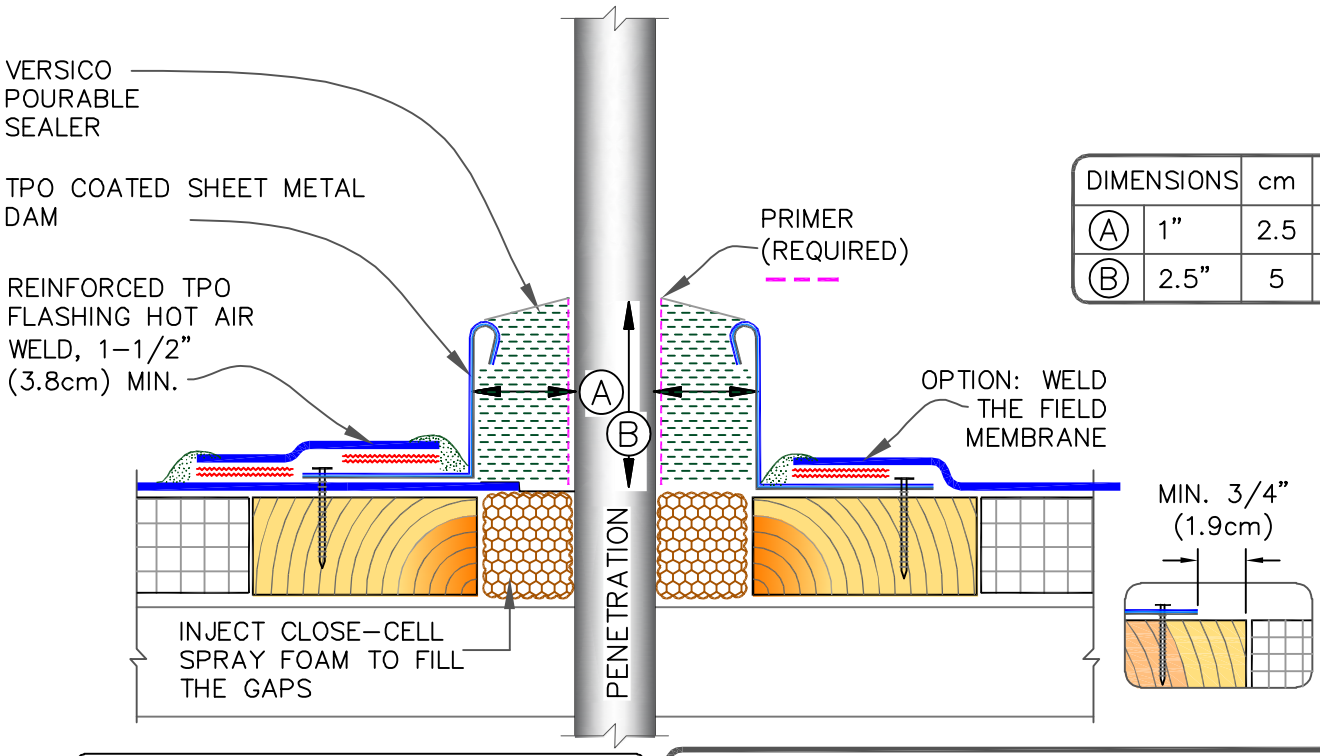

DIMENSIONS		cm	
A	1"	2.5	MIN.
B	2.5"	5	MIN.

SEQUENCE:

1. REINFORCED MEMBRANE STRIPPING.
2. FIELD MEMBRANE.
3. TOP UN-REINFORCED MEMBRANE STRIPPING.

NOTES:

1. TEMPERATURE OF PENETRATIONS MUST NOT EXCEED 160˚ F (71˚ C).
2. TPO PRIMER MUST BE APPLIED TO ALL INSIDE SURFACES AND PENETRATIONS PRIOR TO FILLING WITH SEALANT..
3. FILL POCKET COMPLETELY WITH WHITE ONE-PART POURABLE SEALER UNTIL RIM IS COVERED WITH SEALANT; ENSURE ALL VOIDS ARE FILLED.
4. ON MECHANICALLY-ATTACHED SYSTEMS, INSTALL A MINIMUM OF 4 FASTENING PLATES AROUND SEALANT POCKETS WITH A DIAMETER UP TO 6" (152mm). ADDITIONAL FASTENING PLATES WILL BE REQUIRED FOR SEALANT POCKETS GREATER THAN 6" IN DIAMETER AND SHALL BE SPACED 12" (305mm) ON CENTER MAXIMUM. FASTENERS/PLATES ARE NOT REQUIRED ON ADHERED SYSTEMS UNLESS SEALANT POCKET DIAMETER EXCEEDS 12" (305mm).
5. REFER TO VERSICO SPECIFICATIONS FOR PROPER TYPES OF FASTENERS AND PLATES.

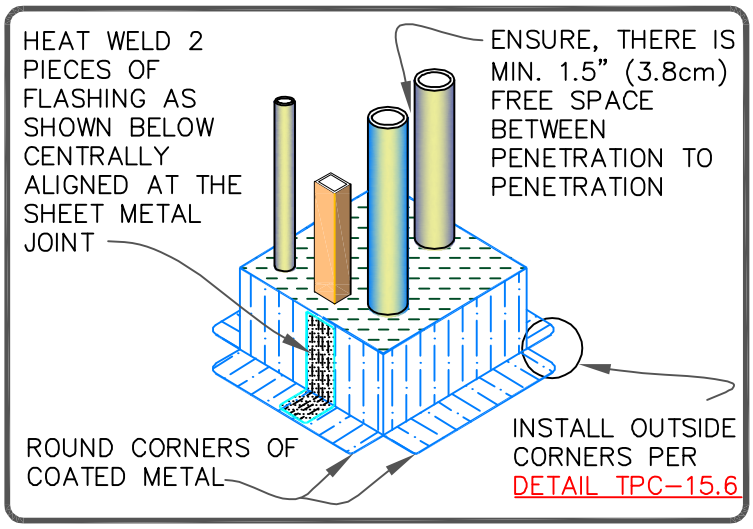

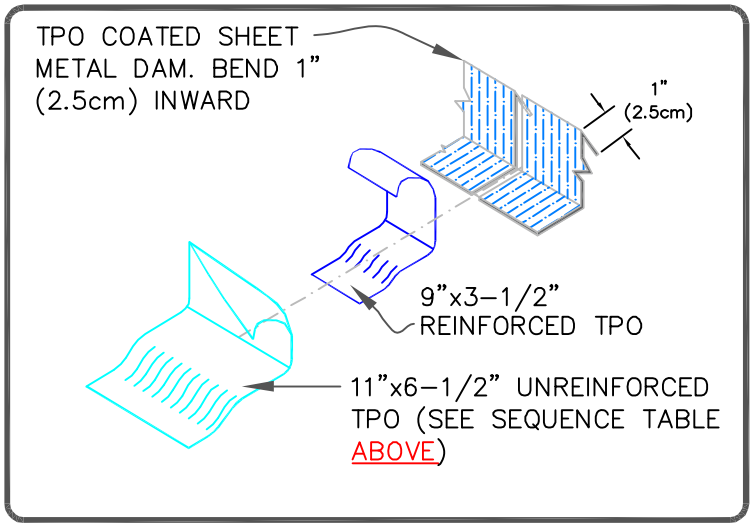

© 2024 VERSICO

FIELD FABRICATED TPO COATED METAL POCKET

TPO MEMBRANE
APPROVED SUBSTRATE
0 SEE NOTE

PS (PRESSURE SENSITIVE)
P&S (PEEL & STICK)
QA (QUICK APPLIED)

THERMOPLASTIC ROOFING SYSTEM

TPC-16.2

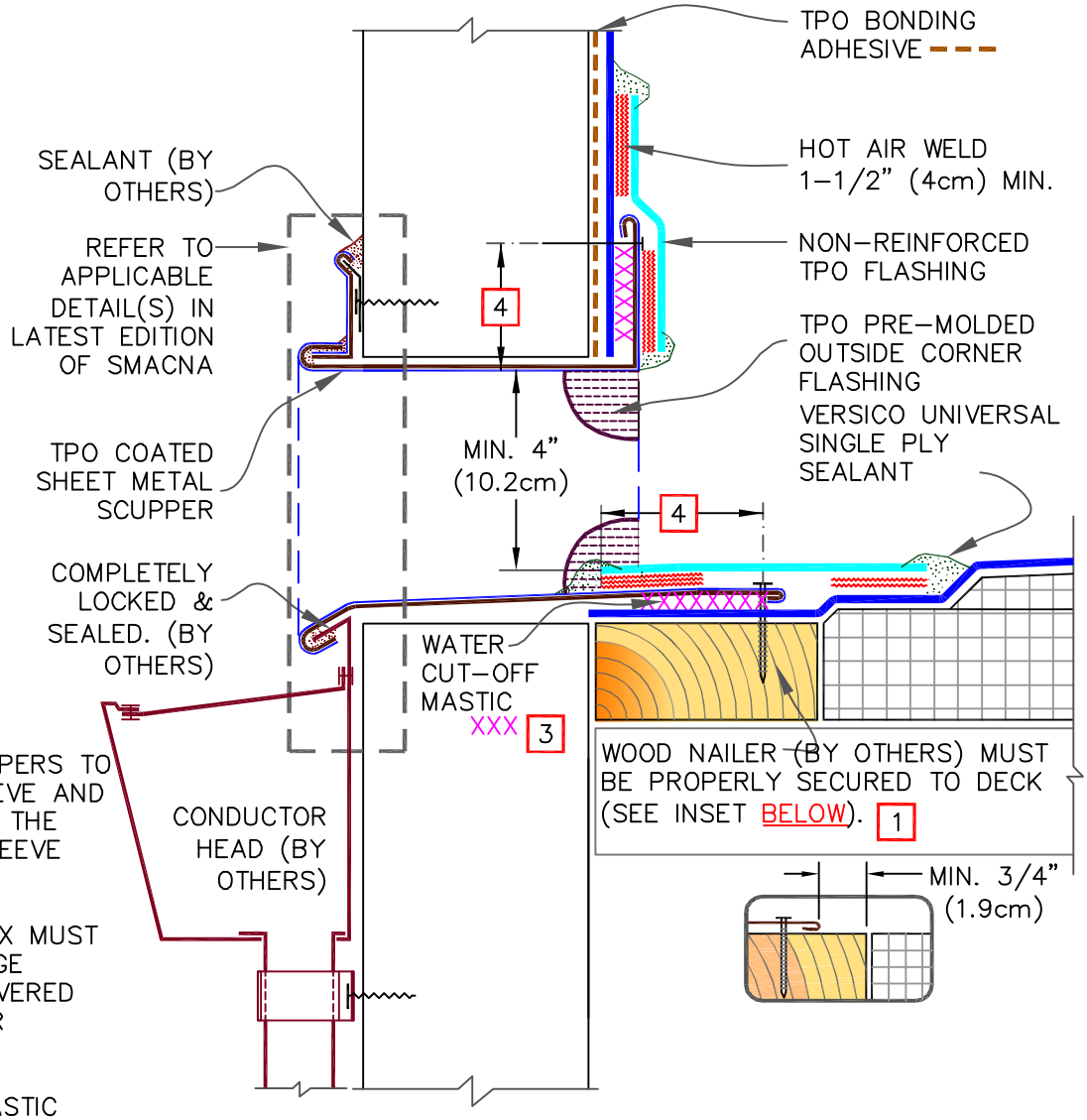

NOTES:

1. WOOD NAILERS ARE INSTALLED AT SCUPPERS TO SECURE METAL SLEEVE AND MUST EXTEND PAST THE WIDTH OF METAL SLEEVE FLANGE.
2. METAL SCUPPER BOX MUST HAVE FOLDED FLANGE CORNERS FULLY COVERED BY OUTSIDE CORNER FLASHING.
3. WATER CUT-OFF MASTIC UNDER SCUPPER FLANGES MUST BE UNDER CONSTANT COMPRESSION.
4. SCUPPER FLANGES MUST BE TOTALLY COVERED BY NON-REINFORCED FLASHING WITH MINIMUM 2" (5cm) COVERAGE PAST NAIL HEAD.

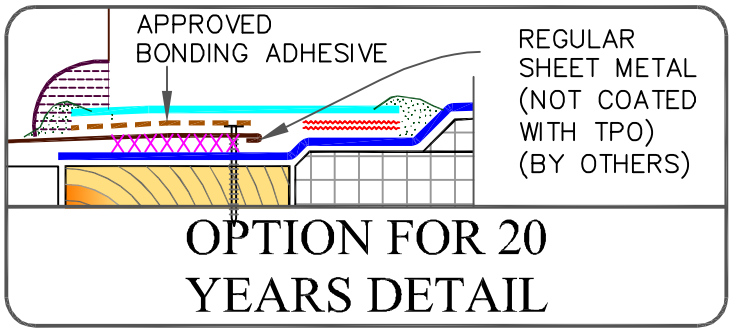

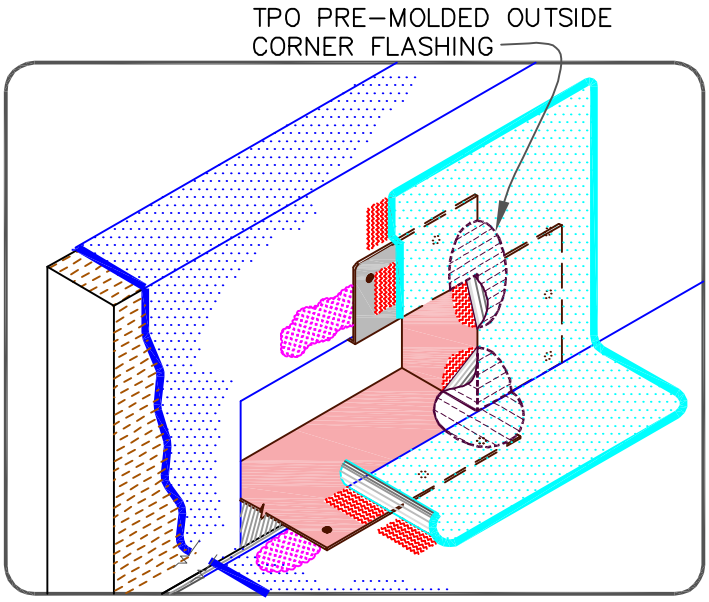

VERSICO ROOFING SYSTEMS
© 2024 VERSICO

SCUPPER: COATED METAL WITH WELDED FLASHING

MAXIMUM WARRANTY: 30 YEARS

TPO MEMBRANE
APPROVED SUBSTRATE
0 → SEE NOTE

PS (PRESSURE SENSITIVE)
P&S (PEEL & STICK)
QA (QUICK APPLIED)

THERMOPLASTIC ROOFING SYSTEM

TPC-18.1

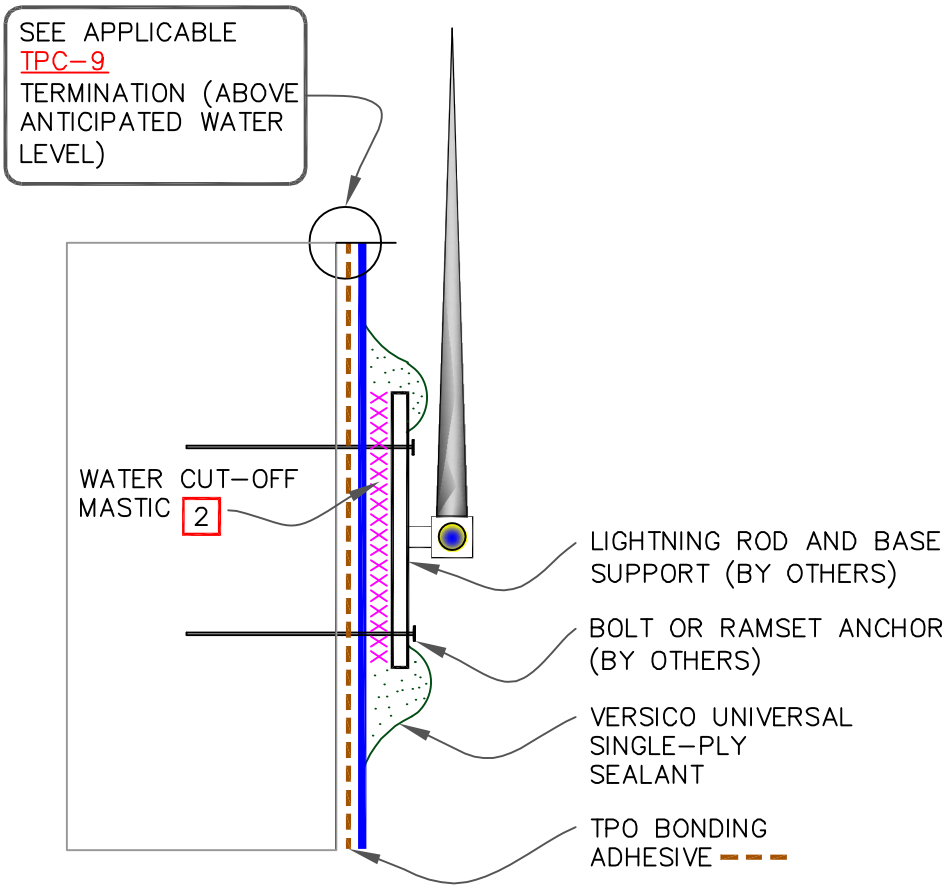

NOTES:

1. DETAIL MAY BE USED FOR ANY FASTENER PENETRATION (E.G., ACCESS LADDER, ANCHOR SUPPORT TO PARAPET).
2. WATER CUT–OFF MASTIC MUST BE UNDER CONSTANT COMPRESSION.
3. DETAIL UNACCEPTABLE FOR HORIZONTAL APPLICATION ON ROOF DECK.
4. COMPLY WITH ZONING ORDNANCE AND LOCAL CODES FOR MOUNTING A LIGHTNING SYSTEM.

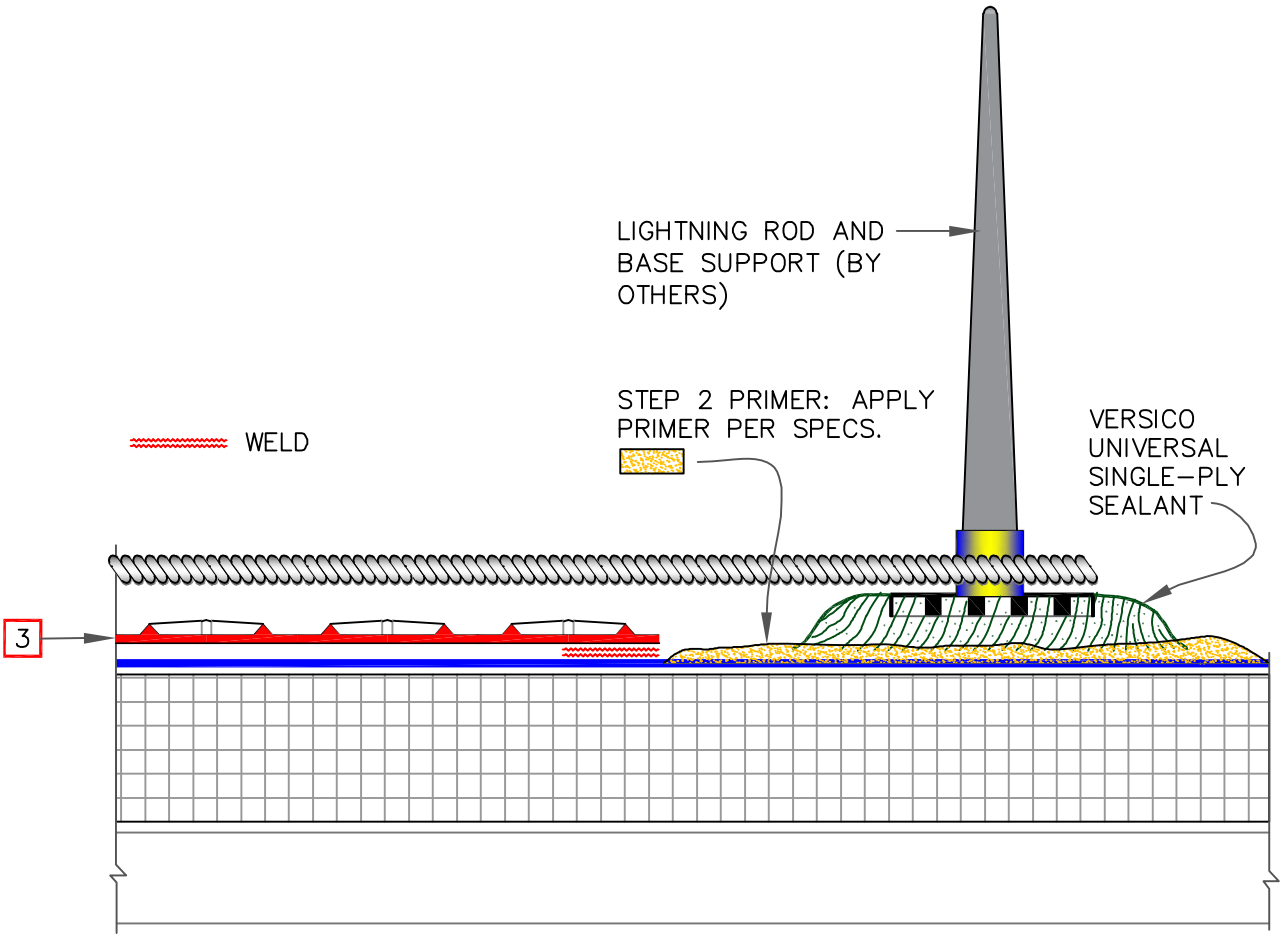

NOTES:

1. CLEAN EXPOSED MEMBRANE SURFACE WITH WEATHERED MEMBRANE CLEANER AND ALLOW TO DRY.

2. COMPLY WITH ZONING ORDNANCE AND LOCAL CODES FOR MOUNTING A LIGHTNING SYSTEM.

3. TO AVOID SURFACE ABRASION, PIECES OF WALK-WAY PADS SHOULD BE WELDED UNDERNEATH THE BRAIDED WIRES. ENSURE, WATER FLOW IS NOT RESTRICTED AND PROVIDE PROPER GAPS.

EXAMPLE: BRAIDED WIRE IN CERTAIN COUNTRIES

VERSICO ROOFING SYSTEMS

© 2024 VERSICO

LIGHTNING ROD AT DECK LEVEL

MAXIMUM WARRANTY: 30 YEARS

TPO MEMBRANE
APPROVED SUBSTRATE
0 → SEE NOTE

PS (PRESSURE SENSITIVE)
P&S (PEEL & STICK)
QA (QUICK APPLIED)

THERMOPLASTIC ROOFING SYSTEM

TPC-20.2

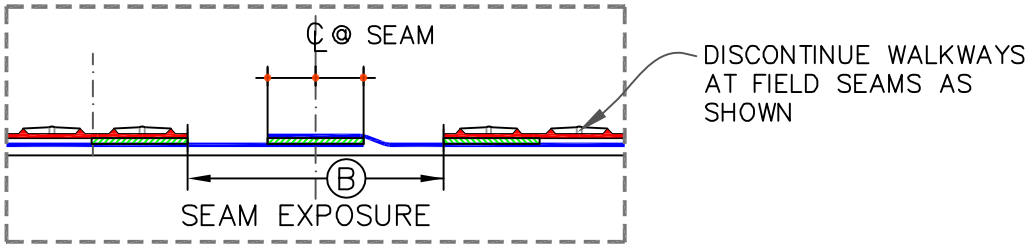

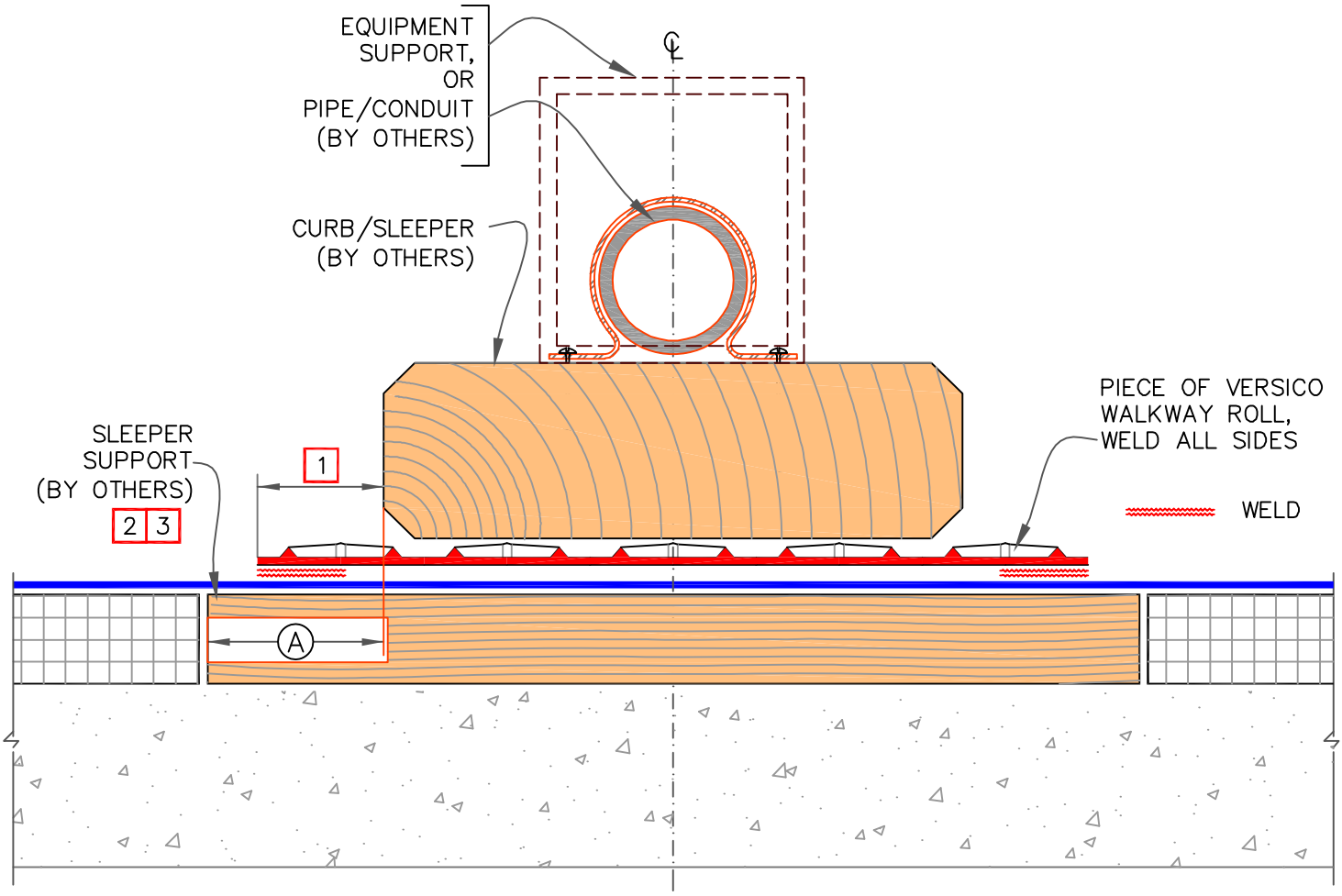

NOTES:

1. SLEEPER MUST BE LARGE ENOUGH TO SUPPORT WEIGHT OF EQUIPMENT WITHOUT INDENTING INSULATION. EXTEND SLEEPER OUT AS REQUIRED BY STRUCTURAL ENGINEER TO DISTRIBUTE SUBJECT LOAD OR AT LEAST EXTEND OUT MIN. 3" (7.5cm).
2. ENSURE SCREW/ANCHOR HEADS IN TOP SURFACE OF WOOD BLOCKING ARE RECESSED TO PROTECT MEMBRANE.
3. SLEEPER SUPPORT NOT REQUIRED UNDER CONDUIT OR PIPE SUPPORTS.
4. CONSULT STRUCTURAL ENGINEER AND/OR SPECIFIER TO AVOID WATER PONDING DUE TO DECK DEFLECTION.
5. RAISE CONDUITS AND PIPES ABOVE THE REGIONAL SNOW LINE WHEN SLOPE OF THE ROOF CAN LEAD TO SLIDING SNOW.

DIMENSIONS		cm	
A	3"	7.5	MIN. ALL SIDES
B	8"	20	

VERSICO ROOFING SYSTEMS
© 2024 VERSICO

SLEEPER DETAIL

MAXIMUM WARRANTY: 30 YEARS

TPO MEMBRANE
APPROVED SUBSTRATE
0 SEE NOTE
PS (PRESSURE SENSITIVE)
P&S (PEEL & STICK)
QA (QUICK APPLIED)

THERMOPLASTIC ROOFING SYSTEM

TPC-24

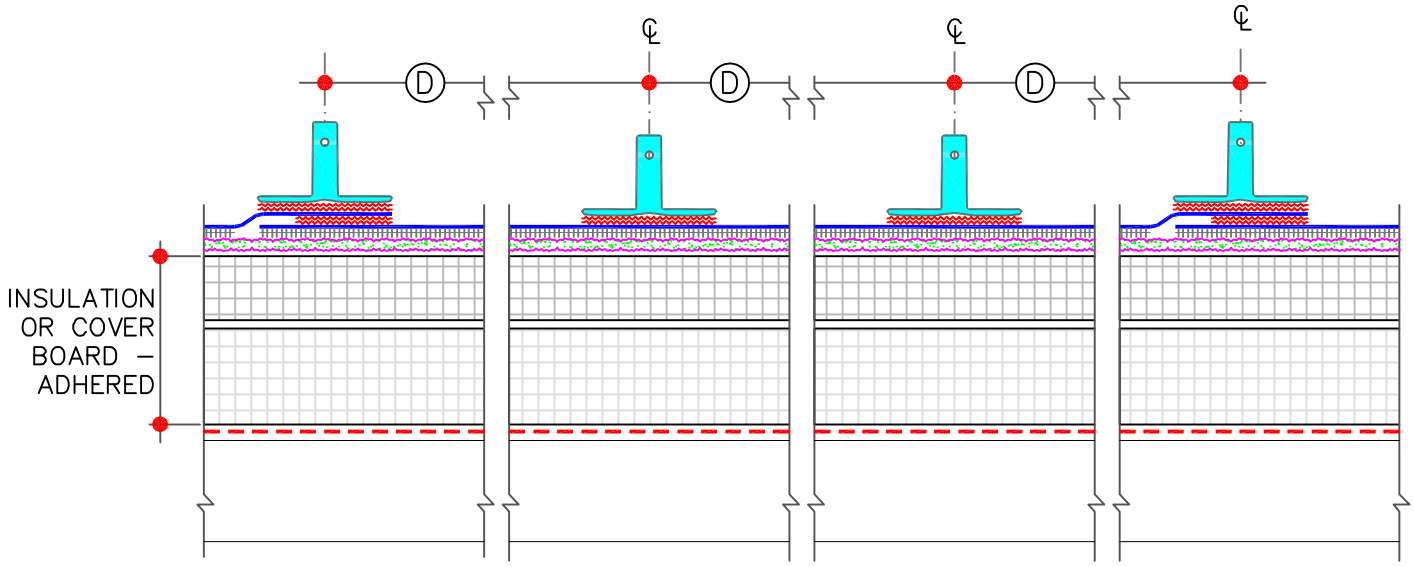

SECTION AA: CONTOUR RIB PROFILE

CONTOUR RIB		
DIMENSIONS		cm
A	1–3/4"	4.5
B	1–1/4"	3
C	1/2"	1
D	VARIES	

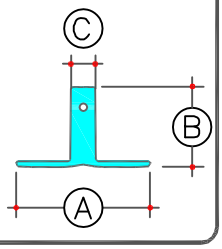

TPO REINFORCED MEMBRANE

APPROVED ADHESIVE

HOT AIR WELD (REFER TO SPECS)

AIR/VAPOR BARRIER (WHERE REQUIRED)

VERSICO ROOFING SYSTEMS

© 2024 VERSICO

VERSIWELD TPO RIB: TYPICAL PROFILE

MAXIMUM WARRANTY: 30 YEARS

TPO MEMBRANE

APPROVED SUBSTRATE

0 → SEE NOTE

PS (PRESSURE SENSITIVE)

P&S (PEEL & STICK)

QA (QUICK APPLIED)

THERMOPLASTIC ROOFING SYSTEM

TPC–25.1

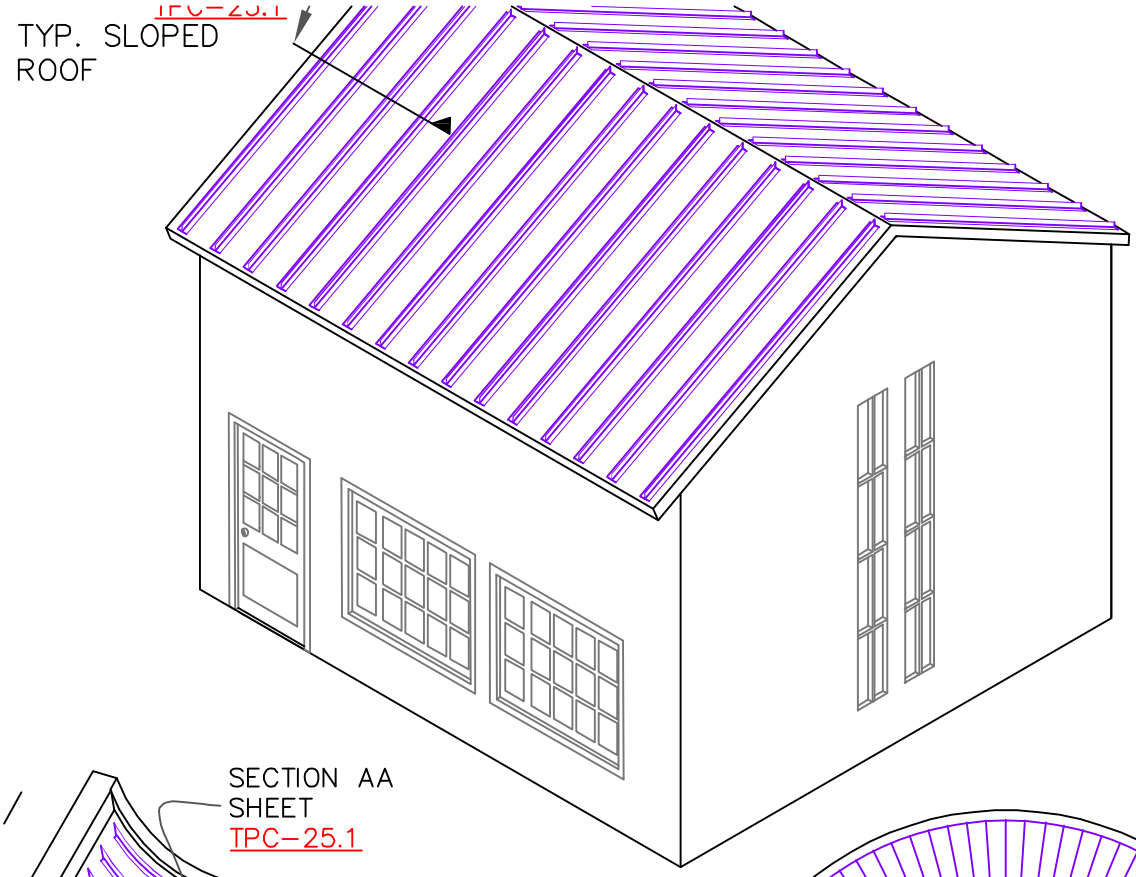

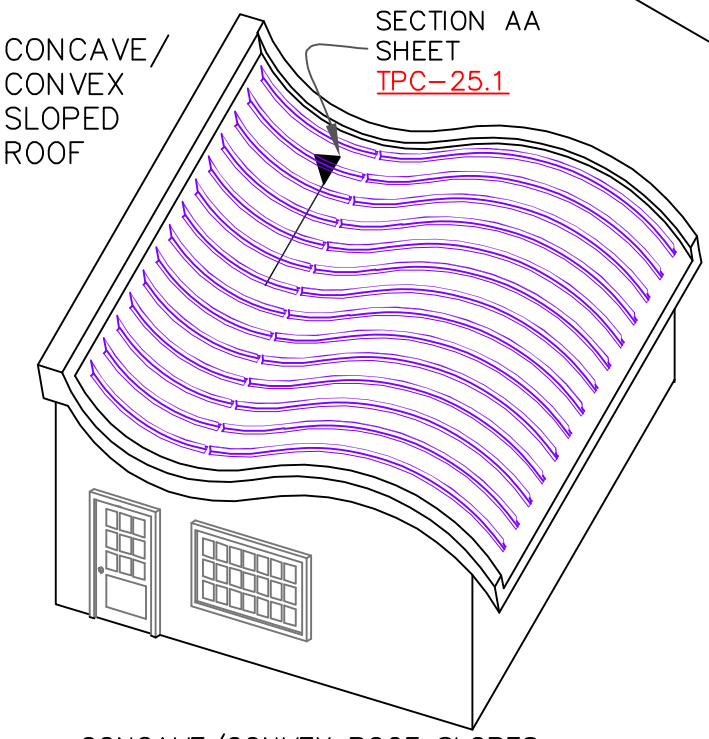

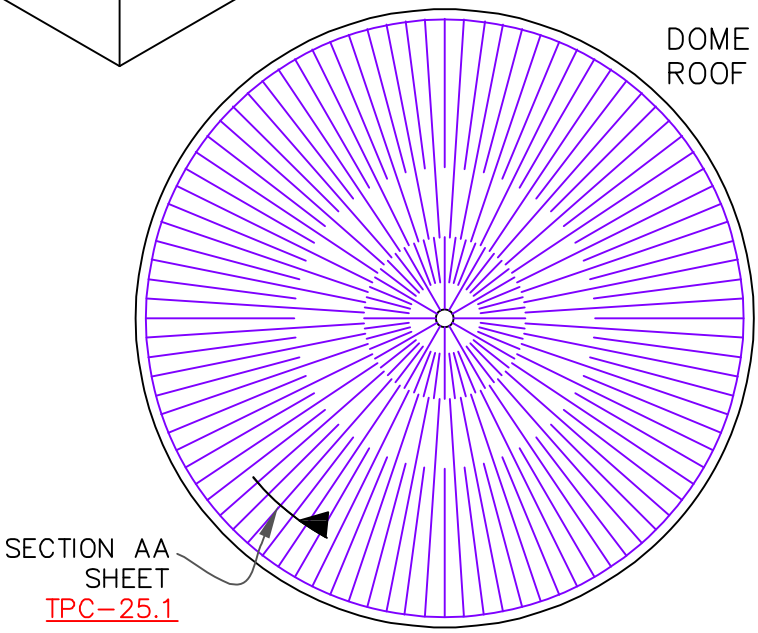

CONCAVE/CONVEX ROOF SLOPES

AT COMPLEX GEOMETRIC SHAPES, WITH MULTI–DIRECTIONAL SLOPES, THE SHEET METAL ROOF IS NOT ONLY DIFFICULT TO INSTALL, BUT THE WATER–SHEDDING ABILITY OF METAL ROOF IS SERIOUSLY HAMPERED WITHIN THE CONCAVE (NEGATIVE) SLOPES. THE WATERPROOFED ROOF MEMBRANE WITH THE CONTOUR RIB IS A PRACTICAL SOLUTION.

TYPICAL PLAN OF DOME ROOF

WHERE CONCENTRATION OF STANDING SEAMS NEAR CENTER IN METAL SYSTEM IS EXTREMELY HARD TO FABRICATE & INSTALL, THE CONTOUR RIB INSTALLATION IS EXTREMELY SIMPLE & EASY TO INSTALL.

VERSICO ROOFING SYSTEMS

© 2024 VERSICO

VERSIWELD TPO RIB: VARIOUS APPLICATIONS

MAXIMUM WARRANTY: 30 YEARS

TPO MEMBRANE
APPROVED SUBSTRATE
0 SEE NOTE

PS (PRESSURE SENSITIVE)
P&S (PEEL & STICK)
QA (QUICK APPLIED)

THERMOPLASTIC ROOFING SYSTEM

TPC–25.2

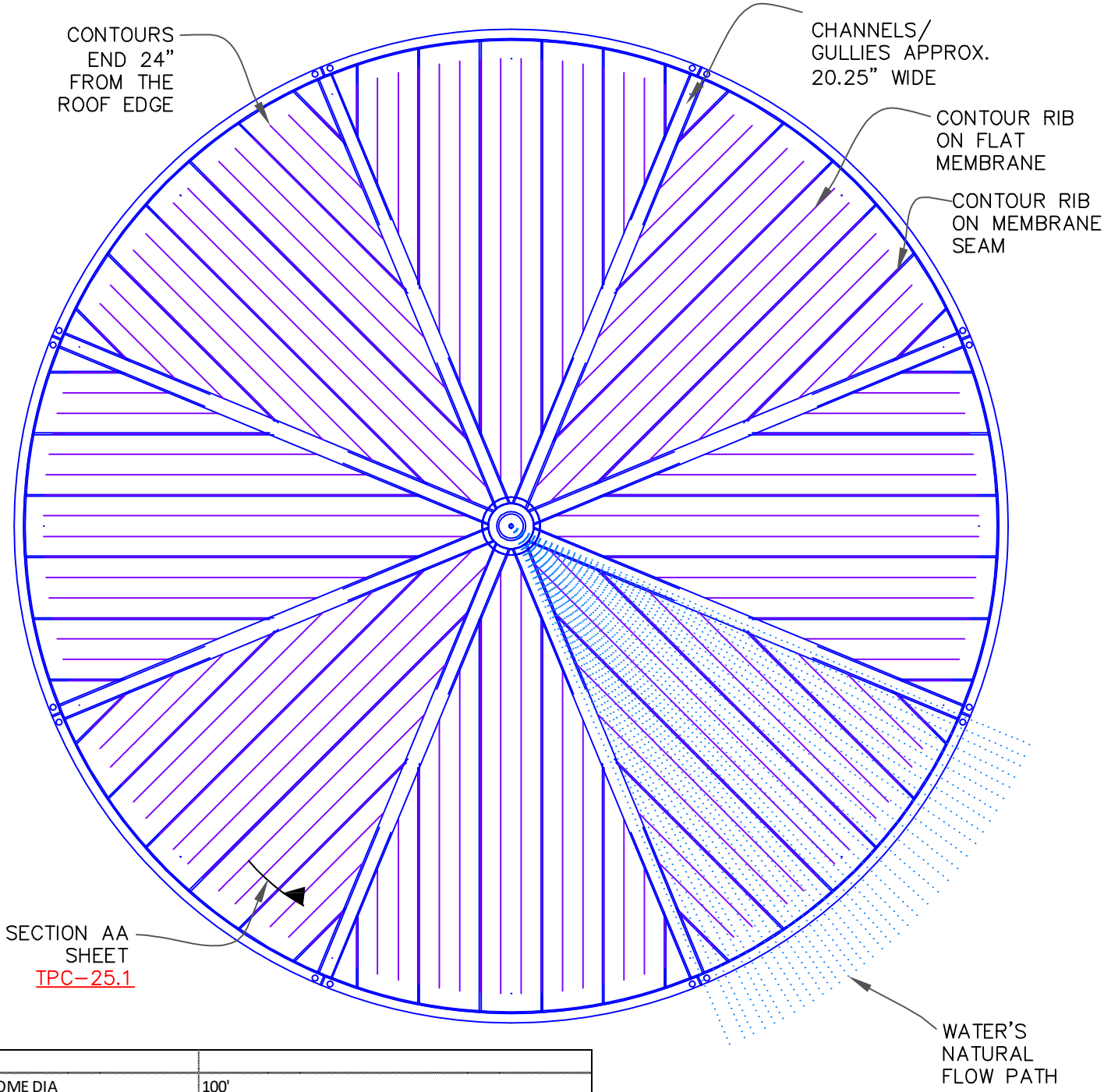

DOME	
TYP. DOME DIA	100'
DOME AREA	8,550 S.F.
MEMBRANE	
ROLL WIDTH	81"
MEMBRANE SEAM WIDTH	2"
WELDED PORTION	1.5"
CHANNELS/GULLIES	PERFECTLY CUT 1/4TH WIDTH OF 81" ROLL (20.25")
APEX POINT	PERFECTLY CUT CIRCULAR SHAPE AS DESIGNED, APPRX. 37" DIA SHOWN
CONTOUR RIBS	
CONTOUR RIBS O.C.	26.333"
TOTAL LENGTH OF CONTOUR RIBS ON ENTIRE 100 DIA DOME	3256 LINEAR FEET (ADD % FOR DOME CURVE)

TYPICAL EXAMPLE OF 100' DIAMETER DOME ROOF PLAN SHOWS 81" WIDE ROLLS SHOWING CONTOUR RIBS @ 26" O.C.

NOTE: APEX MAY BE DESIGNED WITH SELF-CLEANSING ZINC STRIPS TO CUT DOWN STAINING AROUND LIGHTNING ROD ARRESTOR

VERSICO ROOFING SYSTEMS

© 2024 VERSICO

VERSIWELD TPO RIB: EXAMPLE OF DOME WITH RIBS ALIGNED OVER MEMBRANE SEAMS

MAXIMUM WARRANTY: 30 YEARS

TPO MEMBRANE
APPROVED SUBSTRATE
0 → SEE NOTE

PS (PRESSURE SENSITIVE)
P&S (PEEL & STICK)
QA (QUICK APPLIED)

THERMOPLASTIC ROOFING SYSTEM

TPC-25.3

VERSIFLEX PVC

Mechanically Attached and Fully Adhered Roofing Systems

January 2024

TABLE OF CONTENTS

Part I – General

1.01 Description 3
1.02 General Design Considerations 3
1.03 Quality Assurance 5
1.04 Submittals 6
1.05 Warranty 7

Warranty Tables

TABLE I - Warranty Options and Minimum Membrane Thickness 8
TABLE II – Mechanically Attached PVC / KEE HP PVC – Membrane Fastening – Steel/Concrete Decks 9
TABLE III – Mechanically Attached PVC / KEE HP PVC – Membrane Fastening – Plywood / OSB Decks 10
TABLE IV – Mechanically Attached PVC / KEE HP PVC – Membrane Fastening – Lightweight/Gypsum/Wood Fiber Decks 11
TABLE V – Fully Adhered PVC / KEE HP PVC – Underlayment/Fastening – Up to 20 YR Warranties 12
TABLE VI – Fully Adhered PVC / KEE HP PVC – Underlayment/Fastening – 25/30 YR Warranties 14
TABLE VII - Minimum Perimeter Width For VersiFleece Membrane and Insulation Attachment For All Warranties Up to 30 YR Warranties 15
1.06 Job Conditions 15
1.07 Product Delivery Storage and Handling 16

Part II – Product

2.01 General 17
2.02 Membranes 17
2.03 Insulations/Underlayments 20
2.04 Related Materials 25
2.05 Fastening Components 28
2.06 Insulation Securement Adhesive 29
2.07 Vapor/ Air Barrier 29
2.08 Edgings/Terminations 30
2.09 Roof Walkways 31
2.10 Other Versico Accessories 31

Part III – Execution

3.01 General 32
3.02 Roof Deck/Substrate Criteria 32
3.03 Insulation/Underlayment 34
3.04 Insulation Attachment 35
3.05 Membrane Placement and Securement Criteria 36
3.06 Heat Welding Procedures 41
3.07 Welding Problems/Repairs 42
3.08 Flashings 43
3.09 Roof Walkways 45
3.10 Daily Seal 45

Attachments

Attachment I – Induction Welding Attachment Method 47
Installation Details 61

Note: In addition to information listed in this section Specifiers and Authorized contractors should reference Spec Supplement and Design Reference Sections for other pertinent information.

VERSICO ROOFING SYSTEMS

This page intentionally blank

VersiFlex™ PVC/VersiFlex™ FRS PVC/ VersiFlex™ KEE HP Mechanically Attached and Fully Adhered Roofing Systems

January 2024

The information contained in this generic specification represents a part of Versico's requirements for obtaining a roofing system warranty. Construction materials and practices, building siting and operation, climatic conditions, and other site-specific factors will have an impact on the performance of the roofing system. Versico recommends that the building owner retain a design professional to determine appropriate design measures to be taken in order to address these factors.

This section is to serve as criteria for Specifiers and Authorized Contractors regarding the design and installation of Versico's Fully Adhered and Mechanically Attached VersiFlex Membrane Roofing Systems. Additional information essential for the design and installation of the roof system mentioned herein are also included in the Design Reference Section and also listed in the form of a Specification Supplement at the end of the Technical Manual. Specifiers and Authorized Contractors are advised to reference all applicable sections.

Various Warranty Tables have been included in Paragraph 1.05 citing various requirements by which specific warranty coverage can be obtained. Appropriate Warranty Table should be referenced to ensure proper warranty coverage.

PART I – GENERAL

1.01 Description

A. Mechanically Attached Systems (VersiFlex)

1. **The VersiFlex Mechanically Attached Roofing System** incorporates 50, 60 or 80-mil thick Polyester Reinforced VersiFlex Polyvinyl Chloride (PVC) membrane (white, gray, light gray, slate gray and tan) OR 50, 60 or 80-mil thick Polyester Reinforced VersiFlex KEE HP (High Performance) Membrane (white, gray, light gray or tan). Either membrane is available in 10' wide (white, gray, light gray, slate gray and tan) field sheets and 5' perimeter sheets. Standard Polyester Reinforced membrane is also available in 81" wide (white, gray or tan) field sheets and 40.5" perimeter sheets. VersiFlex sheets are available in 75' or 100' rolls. All sheets are mechanically attached over an approved insulation/underlayment to an acceptable roof deck with the appropriate Versico Fasteners and Fastening Plates. Adjoining sheets of VersiFlex membrane are overlapped and joined together with a minimum 1-1/2" wide heat weld. Membrane fastening requirements are outlined in Warranty Tables in Paragraph 1.05 of this Specification.

   NOTE: Either Roofing System may be specified utilizing the RhinoBond attachment method, refer to Attachment I, at the end of this specification for additional information.

   NOTE: Either Roofing System may be specified over an existing standing seam, flat seam or corrugated metal roof (mechanically attached systems incorporate membrane securement into the structural purlins). **Refer to the Metal Retrofit Roofing System Specification**, published separately, for applicable requirements.

B. Fully Adhered Roofing Systems (VersiFlex)

1. The **VersiFlex Fully Adhered Roofing System** incorporates maximum 10' wide, 50-mil, 60-mil or 80-mil thick Fiberglass reinforced VersiFlex FRS Polyvinyl Chloride (PVC) membrane (white, gray, light gray, slate gray and tan). Versico Insulation is mechanically attached to the roof deck or secured with an approved adhesive and the membrane is fully adhered to the substrate with VersiFlex PVC Low-VOC Bonding Adhesive, CAV-GRIP PVC or Hydrobond Water-Based Adhesive. Adjoining sheets of membrane are overlapped and joined together with a minimum 1-1/2" wide heat weld.

   A KEE HP enhanced (white, gray, light gray and tan) VersiFlex KEE HP membrane with Polyester Reinforcement and is available in 5' and 10' width.

   Polyester Reinforced membrane is available in widths of 40.5", 5', 81" and 10' wide (white, gray, light gray, slate gray and tan).
   Fiberglass Reinforced membrane is available in widths of 10' (white, gray, light gray or tan).

1.02 General Design Considerations

Various Warranty Tables have been included in Paragraph 1.05 citing various requirements by which specific

warranty coverage can be obtained. Appropriate Warranty Table should be referenced to ensure proper warranty coverage.

A. The maximum roof slope for Mechanically Attached Roofing Systems is 18" in one horizontal foot. There are no maximum slope restrictions for the application of the Fully Adhered Roofing System.

B. The mechanically attached roofing system is **not acceptable** for installations on steel decks lighter than 22 gauge unless the steel deck is used in conjunction with lightweight concrete and a minimum of 360 pounds pullout per fastener is achieved with HPVX Fasteners into the steel deck below. A Fully Adhered Roofing System may be specified or refer to the Metal Retrofit Roofing System Specification, published separately for other roofing options.

C. Certain petroleum based products, chemicals, and waste products may not be compatible with these roofing membranes. Contact Versico for verification of compatibility and recommendations concerning an acceptable roofing membrane.

D. Metal-Edge Systems and Copings should be designed in compliance with Section 1504.5 of the International Building Code and shall be tested in accordance with ANSI/SPRI ES-1.

E. Concentrated loads from rooftop equipment may cause deformation of insulation/underlayment and possible damage to the membrane if proper protection is not provided. A protection course or sleepers must be specified.

F. It is the responsibility of the specifier to review local, state and regional codes to determine their impact on the specified Versico Roofing System.

G. It is the responsibility of the building owner or his/her designated representative to verify structural load limitation. In addition, a core cut may be taken to verify weight of existing components when the roofing system is to be specified on an existing facility.

H. **Construction Generated Moisture / Vapor Drive**

1. On new construction projects, especially in cold climate regions, moisture generated due to the construction process could adversely impact various components within the roofing assembly if not addressed. Refer to **Design Reference DR-01-21" Construction Generated Moisture"** included in the Versico Technical Manual.

2. On structural concrete decks, when a vapor retarder is not used, gaps in the deck along the perimeter and around penetrations must be sealed along with vertical joints between tilt-up panels, if present, to prevent infiltration of hot humid air and possible moisture contamination resulting from condensation. This is specifically important when adhesive is used to attach the roof insulation.

NOTE: If left unaddressed, collected moisture could weaken insulation boards and facers resulting in a blow-off or increase the probability of mold growth.

I. **Vapor Retarders**

1. Versico does not require a vapor retarder for the protection of the membrane; however, it should be considered by the specifier for the protection of the roofing assembly (i.e. primarily insulation, underlayment and adhesives). The following criteria should be considered by the specifier:

2. Use of a vapor retarder to protect insulation and reduce moisture accumulation within an insulated roofing assembly, should be investigated by the specifier.

3. In the generally temperate climate of the United States, during the winter months, water vapor flows upward from a heated, more humid interior toward a colder, drier exterior. Vapor retarders are more commonly required in northern climates than in southern regions, where downward vapor pressure may be expected and the roofing membrane itself becomes the vapor retarder.

J. **Drainage**

1. Drainage must be evaluated by the specifier in accordance with all applicable codes. Slopes may be provided by tapering the structure or through the use of tapered insulation; a sufficient number of roof drains should also be specified and properly located to allow for positive drainage. Significant ponding that could remain after 48 hours should be eliminated with the addition of auxiliary drains in low areas where ponding is anticipated.

Versico specifically disclaims responsibility for the design and selection of an adequate drainage system and drain accessories. Selection must be made by the building owner or the owner's design professional.

2. Small incidental areas of ponded water will not impact the performance of this roofing system; however, in

accordance with industry standards, the roofing assembly **should be designed to prevent ponding** of water on the roof for prolonged periods (longer than 48 hours). Good roofing practice dictates proper drainage to prevent possible excessive live load and, in the event of a roof leak, to minimize potential interior damage to the roofing assembly and to the interior of the building.

3. **Tapered edge strips, crickets or saddles** are recommended where periodic ponding of water may occur. When the slope of the taper exceeds 2 inches to one horizontal foot, additional membrane securement at the base of the tapered edge strip will be required.

4. Subject to code requirement, it is recommended that a minimum roof slope of 1/8" per horizontal foot be provided to serve long-term aesthetics. On new construction projects, roof drains should be positioned in areas where minimum deflection is anticipated. Slopes greater than 1/8" per foot should be considered due to possible roof deflection.

K. **Retrofit - Recover Projects** (when the existing roofing material is left in place)

1. The removal of existing wet insulation and membrane must be specified. The specifier shall select an appropriate and compatible material as filler for voids created by removal of old insulation or membrane.

2. Entrapment of water between old and new membrane can damage and deteriorate new insulation/underlayment between the two membranes. **If a vapor retarder or air barrier is not specified**, Versico recommends existing membrane be perforated to avoid potential moisture accumulation to allow for detection of moisture to enable the building owner to take corrective action. This can be accomplished by drilling approximately 3/4" diameter holes every 100 square feet in the existing built-up roof or single-ply membrane (excluding non-reinforced PVC membrane).

3. If total removal of existing non-reinforced PVC membrane is not specified, existing membrane may be cut into maximum 10' x 10' sections, when the new insulation or membrane underlayment is to be mechanically attached.

4. Regardless of the type of membrane or assembly selected, any loose flashings at the perimeter, roof drains and roof penetrations must be removed.

1.03 Quality Assurance

Building codes are above and beyond the intended purpose of this specification. The building **owner, owner's representative** or **Specifier** should verify local codes for applicable requirements and limitations. It is the responsibility of the specifier to review local, state and regional codes to determine their impact on the specified Versico Roofing System.

NOTE: For code approvals achieved with the Versico Roofing Systems, refer to the Versico Code Approval Guide, DORA (Directory of Roof Assemblies), Factory Mutual (FM) Approval Guide or Underwriters Laboratories (UL) Fire Resistance or Roofing Materials and Systems Directories.

A. When recovering or retrofitting an existing roof system, the addition of new insulation (type and thickness) may alter the fire performance characteristics of the assembly. Building owners or their designated representatives shall consult the local code enforcement agency to avoid potential code violation.

B. Versico recommends the use of Versico supplied products for use with VersiFlex Roofing Systems. The performance or integrity of products by others, **when selected by the specifier and accepted as compatible by Versico**, is not the responsibility of Versico and is **expressly disclaimed** by the Versico warranty.

C. This roofing system must be installed by a Versico Authorized Roofing Contractor in compliance with drawings and specifications as approved by Versico.

D. There must be no deviations made from Versico's specifications or Versico's approved shop drawings without the **PRIOR WRITTEN APPROVAL** of Versico.

E. After completion of the installation, upon request, an inspection shall be conducted by a Technical Representative of Versico to ascertain that the membrane roofing system has been installed according to Versico's published specifications and details applicable at the time of bid. This inspection is to determine whether a warranty shall be issued. It is not intended as a final inspection for the benefit of the owner.

F. Coordination between various trades is essential to avoid unnecessary rooftop traffic over completed sections of the roof and to prevent subsequent damage to the membrane roofing system.

G. Provide polyisocyanurate insulation that meets PIMA Quality Mark Certified LTTR value through third party verification meeting ASTM C 1289, Type II, Class 1, Grade 2.

H. The solar reflectance of this roofing product may decrease over time due to environmental defacement such as dirt, biological growth, ponded water, etc. The roof should be monitored at regular intervals and maintained or cleaned

when necessary to assure the maximum solar reflectance.

I. Refer to the **Design Reference DR-07-23 "CRRC/LEED Information"** for information. (i.e. solar emittance, solar reflectance and recycled content)

1.04 Submittals

A. To ensure compliance with Versico's minimum warranty requirements, the following projects should be forwarded to Versico for review prior to installation, preferably prior to bid:

1. Air pressurized buildings, canopies and buildings with large openings where the total wall openings exceed 10% of the total wall area on which the openings are located (such as airport hangars, warehouses and large maintenance facilities).

2. Cold storage buildings and freezer facilities.

3. Fully Adhered Roofing System projects over 250' in height (maximum 15 year warranties) and 100' in height (warranties greater than 15 years).

4. Mechanically Attached Roofing System projects over 100' in height regardless of warranty duration.

5. Projects where the VersiFlex membrane is expected to come in direct contact with petroleum-based products or other chemicals.

6. Mechanically Attached systems specified with a fastener length exceeding 12 inches.

B. Along with the project submittals (shop drawings and Request for Warranty), the roofing contractor must include pullout tests when results are below the requirements identified in this specification.

C. Shop drawings must be submitted to Versico by the Versico Authorized Roofing Contractor along with a completely executed Copy-A Job Approval Request for approval. Approved shop drawings are required for inspection of the roof and on projects where on-site technical assistance is requested.

Shop drawings must include:

1. Outline of roof and size
2. Deck type (for multiple deck types)
3. Location and type of **all** penetrations
4. Perimeter and penetration details
5. Key plan (for multiple roof areas) with roof heights indicated
6. Sheet width and number of perimeter sheets for Mechanically Attached systems
7. Fastener type, length and maximum spacing (for membrane securement) for Reinforced Mechanically Attached systems.

Along with the project submittals (shop drawing and Request for Warranty), the roofing contractor must include **pullout test** results when the results are below the requirements identified in, Table included in **Design Reference DR-06-19 "Withdrawal Resistance Criteria"**.

When field conditions necessitate modifications to originally approved shop drawings, a copy of the shop drawing outlining all modifications must be submitted to Versico for revision and approval prior to inspection and warranty issuance.

D. **As-Built Projects** (roofing systems installed prior to project approval by Versico)

The Versico Authorized Contractor may supply Versico with an As-Built drawing for a project completed prior to Versico's approval. The As-Built drawings:

1. Must conform to Versico's most current published specifications and details applicable at the time of bid.
2. Must be submitted along with a completely executed Copy-B Job Completion.
3. Must include the items identified in Paragraph 1.04.C.

NOTE: As-Built projects are not recommended for those projects referenced in Paragraph 1.04A in order to ensure Versico warranty requirements have been met.

E. **Copy-B Job Completion**

After project completion, a Copy-B - Job Completion Date must be submitted to Versico to schedule the necessary inspection of the project prior to issuance of the Versico Warranty.

1.05 Warranty

A. A Total System Warranty is available for roofing systems on commercial buildings within the United States and applies only to **products marketed by Versico**. The total system is defined as membrane, flashings, adhesives, sealants and other Versico brand products utilized in the installation. For a complete description of these products, refer to the Part II "Products" Section in this Specification and **Spec Supplement "Related Products" P-01-22**.

B. See Tables Below for information regarding Warranted Systems and Design Criteria:

1. **TABLE I – Minimum Membrane Thickness for Various Warranty Options** Identifies minimum membrane thickness for Reinforced membranes used in fully adhered or mechanically attached roofing systems.

2. **TABLE II - Mechanically Attached Roofing Systems – PVC / KEE HP PVC Membrane Fastening Criteria - Steel/Concrete Decks** Identifies fastening density, field membrane width and number perimeter sheets required for the various wind zones. The assemblies are categorized based on various building height and specific wind speed warranty coverage.

3. **TABLE III - Mechanically Attached Roofing Systems – PVC / KEE HP PVC Membrane Fastening Criteria - Wood Decks** Identifies fastening density, field membrane width and number perimeter sheets required for the various wind zones. The assemblies are categorized based on various building height and specific wind speed warranty coverage.

4. **TABLE IV - Mechanically Attached Roofing Systems – PVC / KEE HP PVC Membrane Fastening Criteria – Up to 20 Yrs - Lightweight Insulating Concrete over Steel/Gypsum/Cementitious Wood Fiber Decks** Identifies fastening density, field membrane width and number perimeter sheets required for the various wind zones. The assemblies are categorized based on various building height and specific wind speed warranty coverage.

5. **TABLE V – Fully Adhered Roofing Systems - Underlayment and Fastening Density for PVC / KEE HP PVC Assemblies with Warranties Up to 20 Yrs** Identifies required underlayments for fully adhered roofing systems with warranties up to 20 years based on the various wind speed coverages available. The Table also identifies fastening density or adhesive bead spacing and required edge terminations.

6. **TABLE VI – Fully Adhered Roofing Systems – Underlayment and Fastening Density for PVC / KEE HP PVC Assemblies with Warranties – 25 to 30 YR** Identifies required underlayments for fully adhered roofing systems with warranties from 25-30 year based on the various wind speed coverage available. The Table also identifies fastening density or adhesive bead spacing and required edge terminations.

Table I

Mechanically Attached or Fully Adhered Membrane Systems Warranty Options (9)

Years	VersiFlex PVC / VersiFlex KEE HP							
	55, 72, 80 or 90 mph		100 mph		110 to 120 mph		Minimum Membrane Thickness (2)	Additional Hail/Puncture Coverage
	Fully Adhered	Mech. Attached	Fully Adhered	Mech. Attached	Fully Adhered	Mech. Attached		
5,10, or 15 year	√	√	√	N/A(1)	√	N/A	VersiFlex 50-mil (4)	See Below
20 year	√(3)	√	√	N/A	√	N/A	VersiFlex 60 mil (4) OR VersiFlex KEE HP 50-mil	See Below
25 year (7)	√	√	√	N/A	N/A	N/A	VersiFlex 80-mil (4)(6)(8)	See Below
30 year (7)	√	√	√	N/A	N/A	N/A	VersiFlex KEE HP 80-mil (8)	See Below

Notes: N/A = Not Acceptable √= Acceptable

(1) Contact Versico for specific requirements.
(2) All "T-joints" must be overlaid with appropriate flashing material when using 60- or 80-mil PVC/KEE HP membrane.
(3) Hydrobond Adhesive may be used for projects with 20 year maximum warranty and wind speed coverage up to 90 mph.
(4) VersiFlex FRS membrane can be used in lieu of VersiFlex Polyester reinforced membrane for Fully Adhered Roofing Systems Only.
(5) VersiFlex KEE HP PVC 50-mil membrane can be used in lieu of VersiFlex 60-mil membrane for Warranties Up to 20 Year.
(6) VersiFlex KEE HP PVC 60-mil membrane can be used in lieu of VersiFlex 80-mil membrane for Warranties Up to 25 Year.
(7) Enhancements may be required for certain flashing details. Publish details must be referenced for applicable requirements.
(8) VersiFlex PVC 60- or 80-mil membranes in Slate Gray are limited to Warranties Up to 20 Year.

VersiFlex PVC and KEE HP Membrane
Hail
- 1” Dia. Hail Coverage requires a minimum of 60-mil PVC or KEE HP PVC Adhered to cover board.
- 2” Dia. Hail Coverage requires 80-mil PVC or KEE HP PVC Adhered to cover board.

Additional Design Requirement:
- Cover board (SecurShield HD, SecurShield HD Plus, SecurShield HD or DuraFaceR Composite, DensDeck Prime, DensDeck StormX Prime, or Securock – Adhered Only).

Puncture
- Minimum 80-mil PVC with Polyester Reinforcement.

Table II

PVC / KEE HP PVC Membrane Fastening Criteria (All Warranties) for Mechanically Attached Roofing Systems 22 GA. Steel Deck or Structural Concrete Only

CAUTION: Projects with 25 or 30 year warranties an additional perimeter sheet is required beyond those listed in the table below.

Peak Gust Wind Speed Warranty	Max. Building Height	Min. Number of Perimeter Sheets			Field* Membrane Width	Perimeter* Sheet Width	Fastening Density* (Field & Perimeter Sheets)
		Building Distance from Coastline					
		Greater than 7 miles	3 to 7 miles	Less than 3 miles			
55 MPH	Up to 60'	1	2	3	10'	5'	12" O.C.
					81"	40.5"	12" O.C.
	61' to 100'	2	2	3	10'	5'	** See Note
					81"	40.5"	12" O.C.
72 MPH	Up to 60'	2	2	3	10'	5'	12" O.C.
					81"	40.5"	12" O.C.
	61' to 100'	3	4	4	10'	5'	** See Note
					81"	40.5"	12" O.C.
80 MPH	Up to 60'	3	3	4	10'	5'	12" O.C.
					81"	40.5"	12" O.C.
	61' to 100'	3	4	4	10'	5'	** See Note
					81"	40.5"	12" O.C.
90 MPH	Up to 60'	3	4	4	10'	5'	6" O.C.
					81"	40.5"	12" O.C.
	61' to 100'	4	5	5	10'	5'	** See Note
					81"	40.5"	12" O.C.

*Using HPVX Fasteners for steel decks and MP 14-10 or CD-10 for structural concrete decks.

** Structural Concrete Decks use 12” O.C. spacing utilizing MP 14-10 or CD-10. Steel Decks use 6” O.C. utilizing HPVX Fasteners. Steel Decks use 12” O.C. spacing utilizing HPV-XL Fasteners.

PVC / KEE HP PVC Membrane Fastening Criteria
(Up to 20 Year Warranty – Up to 60' Building Height)
for Mechanically Fastening Roofing Systems
Plywood or OSB Decks

Table III

Wood (Plywood or OSB) Decks **Peak Gust Wind Speed Warranty**	**Deck Type**	**Projected Pull-Out Values**	**Min. Number of Perimeter Sheets**			**Field Membrane Width**	**Perimeter Sheet Width**	**Fastening Density (Field & Perimeter Sheets)**
			Building Distance from Coastline					
			Greater than 7 miles	3 to 7 miles	Less than 3 miles			
55 MPH	7/16" OSB	210 lbs	2	3	3	10'	5'*	9" O.C.
			2	3	3	8'	5'*	12" O.C.
	15/32" 3-Ply Plywood	240 lbs	2	2	3	8'	5'*	12" O.C.
	15/32" 5-Ply Plywood	530 lbs	1	2	3	10'	6.5'	12" O.C.
	5/8" OSB	310 lbs	2	3	3	10'	5'*	12" O.C.
			2	3	3	8'	5'*	12" O.C.
72 MPH	15/32" 3-Ply Plywood	240 lbs	2	2	3	8'	5'*	12" O.C.
	15/32" 5-Ply Plywood	530 lbs	1	2	3	10'	6.5'	12" O.C.
	5/8" OSB	310 lbs	2	3.	3	10'	5'*	12" O.C.
			2	3	3	8'	5'*	12" O.C
80 MPH	*Contact Versico for Approval and Evaluation*							

*Maximum duration for OSB NOT to exceed 20 Years.

Table IV

PVC / KEE HP PVC Membrane Fastening Criteria
Up to 20 Warranty for Mechanically Attached Roofing Systems
Lightweight Insulating Concrete over Steel/Gypsum/Cementitious Wood Fiber

Peak Gust Wind Speed Warranty	Building Height 50' Max.	Min. Number of Perimeter Sheets			Field Membrane Width	Perimeter Sheet Width	Fastening Density (Field & Perimeter Sheets)
		Building Distance from Coastline					
	Deck Type	Greater than 7 miles	3 to 7 miles	Less than 3 miles			
55 MPH	Lightweight Concrete over Steel Deck	1	2	4	10'	5'	12" O.C.(1)
		2	3	4	81"(3)	40.5"	12" O.C.(2)
	Gypsum Deck or Cementitious Wood Fiber	2	3	N/A	10'	5' or 6'	9" O.C.
		2	3	4	81"	4'	12" O.C.

N/A is Not Acceptable

(1) For Buildings 51' to 75' with 10' field sheets – Fastening Density must be secured 9" O.C. for field and perimeter sheets.
(2) Fasteners may be spaced at 18" O.C. in the field for buildings Up to 50' in height.
(3) Building Height may be Up to 75' in height.

Additional Design Considerations

1- Membrane configuration and fastening density in Table above is based on HPVX Fasteners penetrating metal pan below Lightweight Insulating Concrete and for Polymer Gyptec Fasteners engaging into Gypsum and Cementitious Fiber Decks.
2-See **Design Reference DR-06-19 "Withdrawal Resistance Criteria"** for more information.

Underlayment/Insulation & Required Attachment Assemblies

Table V Up to 20 YR Warranty for Fully Adhered PVC / KEE HP PVC Roofing

Other Requirements are Listed in Additional Design Considerations following this Table

All Versico Products listed for higher wind speed coverage can also be used for Warranties for a lower wind speed coverage. (i.e. 72 MPH underlayment may be used for 55 MPH underlayment)

Peak Gust Wind Speed Warranty	Minimum Membrane Underlayment*	Insulation Attachment			Metal Edging
		# of Fasteners per 4' x 8' board size (1)	Adhesive Ribbon Spacing for 4' x 4' size board		
			Field	Perimeter	
55 or 72 MPH	1" (20 psi) Polyisocyanurate	16(11)	12" (6)(7)	6"(6)	VersiTrim Drip Edge or VersiTrim 200
	1/1/2" (20 psi) Polyisocyanurate	10			
	2"(20 psi) Polyisocyanurate	8			
	1/2" SecurShield HD (3)	12			
	1/4" DensDeck or 1/4" Securock	12			
80 MPH	1/2" SecurShield HD Plus (3)	8	12"(6)(7)(8)	6"(6)(8)	VersiTrim Drip Edge or VersiTrim 200 (12)
	1/2" Versico Recovery Board (2)	16			
	2" SecurShield HD Composite	6			
	1/2" DensDeck Prime or 1/2" Securock (2)	8			
	1-1/2" (25 psi) Polyisocyanurate	10			
	2" (25 psi) Polyisocyanurate	8			
90 MPH	1/2" DensDeck Prime or 1/2" Securock (2)	12	6"(10)	6"(8)(9)	VersiTrim Drip Edge (4), VersiTrim 200 (4)(5) or VersiTrim 2000 or 3000.
	1/2" SecurShield HD (3) or 1-1/2" (20 psi) SecurShield Polyiso	16			
	1/2" SecurShield HD Plus	12			
	2" (20 psi) SecurShield Polyiso or 2" SecurShield HD Composite	8			
	1-1/2" DuraFaceR (OSB/Polyiso Composite) or 1/2" DuraStorm VSH (2)	8			
	1-1/2" Insulfoam HD Composite	16			
100 MPH	2" (25-psi) SecurShield Polyiso (1)	16	FS	FS	VersiTrim Drip Edge (4), VersiTrim 200 (4)(5) or VersiTrim 2000 or 3000.
110 MPH	1-1/2" DuraFaceR (OSB/Polyiso Composite) or 1/2" DuraStorm VSH (2)	16	FS	FS	VersiTrim 2000 or 3000
	1/2" SecurShield HD Plus (3)				
120 MPH	5/8" DensDeck Prime or 5/8" DensDeck StormX Prime or 5/8" Securock (2)	16	FS	FS	VersiTrim 2000 or 3000
	1-1/2" DuraFaceR (OSB/Polyiso Composite) (1) or 1/2" DuraStorm VSH (2	17			
	1/2" SecurShield HD Plus (3)	24			
	2" SecurShield HD Composite	16			

FS = Full Spray or Ribbons @ 4" O.C.

***For Direct Application over Wood Decks and Lightweight Cellular Concrete, Refer to Roof Deck & Substrate Criteria Table.**

(1) For Building heights between 51'-100', enhance 12'-wide perimeter with 50% more fasteners and plates.

(2) Cover boards must be installed over a min. 1" thick approved Versico Insulation.

(3) 1/2" SecurShield HD limited to 90 mph. 1/2" SecurShield HD Plus limited to 120 mph.

(4) Versico HPV or HPVX Fasteners must be used to secure VersiTrim Drip Edge or VersiTrim 200 Metal Fascia to perimeter wood nailers.
(5) Membrane securement is required at the base of the VersiTrim 200 waterdam.
(6) Gravel Surface BUR - Field @ 6" O.C. / Perimeter @ 4" O.C.
(7) Steel Decks - Field & Perimeter @ 6" O.C.
(8) Cementitious Wood Fiber - Field @ 6" O.C. / Perimeter @ 4" O.C.
(9) Smooth BUR - Field @ 6" O.C. / Perimeter @ 4" O.C.
(10) Gravel Surface BUR - 4" O.C.
(11) Reduced fastening (11 fasteners per 4 x 8 board) is acceptable on Reroof/No Tear off projects with a maximum roof height of 40'.
(12) May be fastened with ring shank nails staggered 4" on center. Versico HPV or HPVX Fasteners may also be used fastened 12" on center.
(13) Gypsum deck – Bead Spacing @ 6" O.C.

Additional Design Considerations

1 – Refer to Table I in paragraph 1.05 for applicable membrane thickness.
2 - Building height shall not exceed 100'*
3 - Local Wind Zone per ASCE 7 shall not exceed 130 mph*
4 - Acceptable decking: 22-gauge or heavier steel, structural concrete, 1-1/2" wood plank, or 15/32" plywood.
5 - All "T-Joints" must be overlaid with Versico "T-Joint" Covers.

* Projects where building height exceeds 100', shall be submitted to Versico for review.

Table VI — Underlayment/Insulation & Required Attachment Assemblies
25 YR or 30 YR Warranty for Fully Adhered PVC / KEE HP PVC Roofing Systems

Other Requirements are Listed in Additional Design Considerations following this Table.

All Versico Products listed for higher wind speed coverage can also be used for Warranties with a lower wind speed coverage. (i.e. 72 MPH underlayment may be used for 55 MPH underlayment)

Peak Gust Wind Speed Warranty	Minimum Membrane Underlayment	Insulation Attachment			Metal Edging
		# of Fasteners per 4' x 8' board size (1)	Adhesive Ribbon Spacing for 4' x 4' size board		
			Field	Perimeter	
55 or 72 MPH	1" to 2" (25 psi) Polyisocyanurate	16	6" (3)(5)	6" (5)	VersiTrim Drip Edge or VersiTrim 200
	1/2" Versico Recovery Board (1) (9)				
	1/4" DensDeck Prime or 1/4" Securock				
	1/2" SecurShield HD (2)				
80 MPH	1-1/2" to 2" (25-psi) SecurShield Polyisocyanurate	20	6" (4)(5)(6)	6" (5)(6)	VersiTrim Drip Edge (7), VersiTrim 200 (7)(8)or VersiTrim 2000 or 3000
	1/2" DensDeck Prime or 1/2" Securock (2)	16			
	1/2" SecurShield HD Plus (2)				
	1/2" SecurShield HD (2)	20			
90 MPH	1/2" SecurShield HD (2)	24	FS	FS	VersiTrim2000 or 3000
	1/2" SecurShield HD Plus (2)	20			
	1/2" DensDeck Prime or 1/2" Securock (2)				
100 MPH	5/8" DensDeck Prime or 5/8" DensDeck StormX Prime or 5/8" Securock (2)	16	FS	FS	VersiTrim 2000 or 3000
	1-1/2" DuraFaceR (OSB/Polyiso Composite) or 1/2" DuraStorm VSH (2)				
	2" SecurShield HD Composite (2)				
	1/2" SecurShield HD Plus (2)	24			

FS = Full Spray or Ribbons @ 4" O.C.
(1) For Building heights between 51'-100', enhance 12'-wide perimeter with 50% more fasteners and plates.
(2) Hail coverage offered with substrate.
(3) Structural Concrete - Field @ 12" O.C. / Perimeter @ 6" O.C.
(4) 80- mph warranty wind speed coverage over Structural Concrete, Adhesive Ribbon Spacing, for Field & Perimeter 6" O.C.
(5) Cementitious Wood Fiber & Wood - 4" O.C.
(6) 80-mph warranty wind speed coverage over Gypsum Decks – Adhesive Ribbon spacing shall be at 4" O.C.
(7) Versico HPV or HPVX Fasteners must be used to secure VersiTrim Drip Edge or VersiTrim 200 Metal Fascia to perimeter wood nailers.
(8) Membrane securement is required at the base of the VersiTrim 200 waterdam.
(9) 1/2" Recovery Board limited to 55 mph.

Additional Design Considerations

1 - Minimum membrane thickness 80-mil PVC or KEE HP PVC
2 - Building height shall not exceed 100'*
3 - Local Wind Zone per ASCE 7 shall not exceed 130 mph*
4 - Acceptable decking: 22-gauge or heavier steel, structural concrete, 1-1/2" wood plank, or 15/32" plywood.
5 - Enhancements are required for certain flashing details. Published details must be referenced for applicable requirements.
6- New construction or complete tear-off of existing roofing material.

* Projects where building height exceeds 100' or warranty wind speed exceeds 100 mph, shall be submitted to Versico for review.

Table VII

Minimum Perimeter Width For VersiFleece Membrane and Insulation Attachment For All Warranties Up to 30 YR

Width of Perimeter	Building Height
4 feet	25 feet
8 feet	26 to 50 feet
12 feet	51 to 75 feet
16 feet	76 to 100 feet
24 feet	Greater than 100 feet

Note: This Table is for reference for Versico System Warranties and does not replace FM requirements for FM insured projects.

C. **Access for warranty service**

It shall be the owner's responsibility to expose the membrane in the event that warranty service is required when access is impaired. Such impairment includes, but is not necessarily limited to:

1. Design features, such as window washer systems, which require the installation of traffic surface units in excess of 100 pounds per unit.

2. Any equipment, ornamentation, building service units and other top surfacing materials which are not defined as part of this specification.

3. Photovoltaic and Mounting systems or other Rooftop equipment that does not provide Versico with reasonable access to the membrane system for purposes of warranty investigation and related repairs.

4. Severely ponded conditions.

CAUTION: APPLICATIONS SUCH AS WALKING DECKS, TERRACES, PATIOS OR AREAS SUBJECTED TO CONDITIONS NOT TYPICALLY FOUND ON ROOFING SYSTEMS WILL **NOT** BE ELIGIBLE FOR A MEMBRANE SYSTEM WARRANTY.

D. The formation or presence of mold or fungi in a building is dependent upon a broad range of factors including, but not limited to, the presence of spores and nutrient sources, moisture, temperatures, climatic conditions, relative humidity, and heating/ventilating systems and their maintenance and operating capabilities. These factors are beyond the control of Versico and Versico shall not be responsible for any claims, repairs, restoration or damages relating to the presence of any irritants, contaminants, vapors, fumes, molds, fungi, bacteria, spores, mycotoxins, or the like in any building or in the air, land, or water serving the building.

1.06 Job Conditions

A. On phased roofing, temporary closures should be provided to prevent moisture infiltration. When a temporary roof is specified, Versico 725-TR in conjunction with CCW-702, CCW-702LV or CAV-GRIP 3V Low-VOC Adhesive/Primer may be used. Refer to Product Section Part II for additional product information and **Specification Supplement G-07-20**.

B. When possible on multiple level roofs, begin the installation on the highest level to avoid or minimize construction traffic on completed roof sections.

C. On projects at high altitudes (6,000' and above) rapid flash-off (drying) of Adhesives will occur due to low atmospheric pressure.

D. When roof slopes exceed 5 inches per horizontal foot, use of an Automatic Heat Welder may be more difficult. A Hand Held Hot Air Welder should be specified.

E. Vapor Retarders

1. Versico does not require a vapor retarder for the protection of the membrane; however, the following criteria should be considered by the specifier:

   a) Use of a vapor retarder to protect insulation and reduce moisture accumulation within an insulated roofing assembly, should be investigated. Consult latest publications by ASHRAE (American Society of Heating, Refrigerating and Air-Conditioning Engineers, Inc.) and NRCA (National Roofing Contractors Association) for specific information.

   b) In the generally temperate climate of the United States, during the winter months, water vapor flows upward from a heated, more humid interior toward a colder, drier exterior. Vapor retarders are more commonly required in northern climates than in southern regions, where downward vapor pressure may be expected and the roofing membrane itself becomes the vapor retarder.

   c) On cold storage/freezer facilities, the perimeter and penetration details must be selected to provide an air seal and prevent outside air from infiltrating and condensing within the roofing assembly.

2. When a vapor retarder is specified, Versico 725TR Air and Vapor Barrier may be used. Refer to Part II "Products" for necessary information and **Spec Supplement G-07-20 "Application Procedures for 725TR Air and Vapor Barrier"** for product Installation.

F. Wood nailers are required for the securement of metal edgings, scuppers, and insulated pipes. Wood Nailer shall be secured per specifier recommendation or in accordance with Factory Mutual's property Loss Prevention Data Sheet 1-49. Refer to **Design Reference DR-08-11 "Wood Nailers Securement Criteria"** in Versico Technical Manual shall be referenced.

G. When any of the Roofing Systems are specified on a portion of a roof, tie-ins to existing roofing membranes will be required. Depending on the type of the existing roofing system, the tie-in method will vary. Total isolation between two roofing systems or weep holes may be required to address moisture migration from one roofing system to the other. Prior to the selection of any tie-in detail, ensure the selected detail will not restrict drainage.

H. On new construction projects, located in colder climates, special consideration should be given to construction practices and the possible migration of hot, humid air and moisture generated during construction. Refer to Paragraph 1.02 I and **Spec Supplement G-01-18 "Construction Generated Moisture".**

1.07 Product, Delivery, Storage and Handling

A. Deliver materials to the job site in the original, unopened containers.

B. When loading materials onto the roof, the Versico Authorized Roofing Contractor must comply with the requirements of the specifier/owner to prevent overloading and possible disturbance to the building structure.

C. Job site storage temperatures in excess of 90°F (32°C) may affect shelf life of curable materials (i.e., adhesives and sealants).

D. When the temperature is expected to fall below 40°F (4°C), outside storage boxes should be provided on the roof for temporary storage of liquid adhesives and sealants. Adhesive and sealant containers should be rotated to maintain their temperature above 40°F (4°C). Refer to Technical Data Bulletins for individual products for temperature restrictions.

E. Do not store adhesive or cleaner containers with opened lids due to the loss of solvent that will occur from flash-off.

F. Store Versico membrane on provided pallets in the original undisturbed plastic wrap in a cool, shaded area and cover with light-colored, breathable tarpaulins.

G. Insulation/underlayment must be stored so that it is kept dry and is protected from the elements. Store bundles flat and upright with the bottom of the bundles elevated (2" or more) above the finished surface.

H. Slit the insulation bundle packaging vertically down the center of the two short sides to prevent moisture accumulation within the package. Completely cover the bundle with a waterproof tarp and secure to prevent wind damage and / or displacement.

Part II – PRODUCTS

2.01 General

The components of this roofing system are to be products of Versico or accepted by Versico as compatible. The installation, performance or integrity of products by others, **when selected by the specifier and accepted by Versico**, is not the responsibility of Versico and is expressly disclaimed by the Versico warranty.

2.02 Membranes

A. **VersiFlex Membranes**

1. General

   a) The VersiFlex PVC membrane (white) meets the emittance requirements set forth by the USGBC (US Green Building Council) for their LEED (Leadership in Energy and Environmental Designs) Program. When tested in accordance with ASTM E408, an emittance of 0.89 was achieved and an SRI (solar reflectance index) of 108 was calculated using ASTM E1980.

   b) The VersiFlex KEE HP PVC membrane (white) meets the emittance requirements set forth by the USGBC (US Green Building Council) for their LEED (Leadership in Energy and Environmental Designs) Program. When tested in accordance with ASTM E408, an emittance of 0.89 was achieved and an SRI (solar reflectance index) of 103 was calculated using ASTM E1980.

2. VersiFlex 50-mil, 60-mil or 80-mil thick **Polyester Reinforced PVC** (Polyvinyl Chloride) Membrane conforms to the following physical properties

   a) Physical properties of the membrane are enhanced by a strong, polyester fabric that is encapsulated between the PVC based top and bottom plies. The combination of the fabric and PVC plies provide VersiFlex Reinforced PVC membranes with high breaking strength, tearing strength, and puncture resistance.

   b) Field membrane sheets are packaged in rolls 81” or 120” wide. Perimeter membrane sheets are available in a width of 40.5” or 5’ wide. 50-mil thick membrane is available in lengths of 100’, 60-mil is available in 100’ lengths and 80-mil is available in 75’ lengths. VersiFlex PVC Membrane is available in white, gray, light gray, slate gray and tan. VersiFlex PVC KEE HP Membrane is available in white, gray, light gray, and tan.

   OPTION: 60-mil VersiFlex PVC or 60-mil VersiFlex KEE HP PVC (white color only) reinforced membrane is available with an optional APEEL Protective Film. APEEL Protective Film can be left in place for up to 90 days without affecting the integrity of the film, guarding the PVC/KEE HP membrane’s surface from scuffs and dirt accumulation during installation. Durable and easy to remove, APEEL Protective Film improves aesthetics and long-term reflectivity. Available 5’ and 10’ widths by 100’ long rolls. Also available, APEEL 6” Cover Tape, allowing 100% coverage of the PVC surface.

VersiFlex Polyester Reinforced PVC Membrane				
Physical Property	**ASTM D4434 Requirement**	**50-mil Min.**	**60-mil Min.**	**80-mil Min.**
Thickness Over Scrim, in. (mm) ASTM D4434 optical method average of 3 areas	0.016 min. (0.40)	0.022 (0.559)	0.028 (0.711)	0.038 (0.965)
Weight, lbs/ft^2 (kg/m^2)	No requirement	0.33 (1.61)	0.40 (1.95)	0.55 (2.68)
Breaking Strength (MD X CD), lbf/in (kN/m) ASTM D751 grab method	275 min. (48)	320 x 300 (56 x 53)	330 x 300 (58 x 55)	360 x 330 (63 x 58)
Elongation break of reinforcement (MD x CD), % ASTM D751 grab method	25 min.	30 x 30	30 x 30	30 x 30
Seam Strength, min. ASTMD751 grab method (% of breaking strength)	>75	PASS	PASS	PASS
Tearing Strength (MD x CD), lbf (N) ASTM D751 proc. B, 8 in. x 8 in.	90 min. (400)	100 x 120 (445 x 534)	100 x 130 (445 x 578)	100 x 132 (445 x 587)
Low Temperature Bend, ASTM D2135, no cracks 5x at -40ºC	PASS	PASS (-40ºC)	PASS (-40ºC)	PASS (-40ºC)
Linear Dimensional Change, % ASTM D1204, 6 hours at 176ºF	+/- 0.5 max.	0.4	0.4	0.4
Ozone Resistance, no cracks 7x ASTM D1149, 100pphm, 168 hrs	PASS	PASS	PASS	PASS
Water Absorption Resistance, mass % ASTM D570, 166 hours at 158ºF	+/- 3.0 max.	2.0	2.0	2.0
Field Seam Strength, lbf/in. (kN/m) ASTM D1876 tested in peel	No Requirement	25 (4.4) min. 60 (10.5) max.	25 (4.4) min. 60 (10.5) max.	25 (4.4) min. 60 (10.5) max.
Water Vapor Permeance, Perms, ASTM E96 proc. B	No Requirement	0.10 max. 0.05 typ.	0.10 max. 0.05 typ.	0.10 max. 0.05 typ.
Puncture Resistance – Federal, lbf (kN) FTM 101C, method 2031	No Requirement	280	320	380
Puncture Resistance – Dynamic, J (ft-lbf) ASTM D5635	20 (14.7)	PASS	PASS	PASS
Puncture Resistance – Static, lbf (N) ASTM D5602	33 (145)	PASS	PASS	PASS
Xenon-Arc Resistance, no cracks/crazing 10x, ASTM G155 0.35 W/m^2 at 340-nm, 63ºC B.P.T. 12,600 kJ/m^2 total radiant exposure 10,000 hours	PASS	PASS	PASS	PASS
Properties After Heat Aging, ASTM D3045, 56 days at 176ºF Breaking Strength, % retained Elongation reinf., % retained	90 min. 90 min.	90 min. 90 min.	90 min. 90 min.	90 min. 90 min.
B.P.T. is black panel temperature				

3. VersiFlex 50-mil, 60-mil or 80-mil thick **Reinforced FRS PVC** (Polyvinyl Chloride) Membrane is designed specifically for Fully Adhered applications and conforms to the following physical properties.

   a) Dimensional stability of the membrane is enhanced by fiberglass that is encapsulated between the PVC based top and bottom plies. The combination of fiberglass and PVC plies provide VersiFlex FRS PVC membranes with enhanced dimensional stability for fully adhered roof systems using liquid applied bonding adhesives.

   b) Membrane sheets are packaged in rolls 10’ wide. 50-mil thick membrane is available in lengths of 100’, 60-mil is available in 80’ lengths and 80-mil is available in 65’ lengths. VersiFlex Reinforced FRS PVC membrane is available in white, gray, light gray and tan.

VersiFlex Reinforced FRS PVC Membrane			
Physical Property	**Test Method**	**Property of Unaged Sheet**	**Property After ASTM D3045 aging 56 days @ 176° F**
Tolerance on Nominal Thickness, %	ASTM D 638	± 10	
Thickness over scrim, in. (mm) 50-mil & 60-mil 80-mil	ASTM D 4434 Optical Method (avg. of 3 areas)	0.016 (0.406) min. 0.025 (0.635) min.	
Tensile Strength, psi (MPa) (machine & cross-machine direction)	ASTM D 638 (Grab Method)	1500 (10.4) min. 1900 (13.1) typical	90% min. retention of original breaking strength
Elongation at Break, % Machine direction Cross-machine direction	ASTM D 638	250 min. (270 typical) 220 min. (250 typical)	90% min. retention of original elongation
Tear Resistance, lbf (N)	ASTM D 1004	10 (45) min. 12 (53) typical	
Low Temperature Bend at -40° F (-40° C)	ASTM D 2136	Pass	
Linear Dimensional Change (shrinkage), % after 6 hours at 176° F (80° C)	ASTM D 1204	+/- 0.1 max. 0.05 typical	
Ozone resistance, 100 pphm, 168 hours	ASTM D1149	No cracks	
Resistance to water absorption After 7 days immersion 158° F (70° C) Change in mass, %	ASTM D 570	3.0 max. 0.5 typical	
Seam strength, % of tensile strength	ASTM D638	75 min. 80 typical	
Water vapor permeance, Perms	ASTM E 96	0.10 max. 0.05 typical	
Puncture resistance (see supplemental section for additional puncture data)			
Resistance to xenon-arc weathering Xenon-Arc, 12,600 kJ/m² total radiant exposure, visual condition at 10X (ASTM D 4434 light & spray cycle)	ASTM G155 0.35 W/m² 63 ° C B.P.T. (5,000 hours)	No cracks No crazing	
B.P.T. is black panel temperature			

4. VersiFlex KEE HP 50-mil, 60-mil or 80-mil thick Polyester Reinforced **PVC** (Polyvinyl Chloride) **KEE HP** (High Performance) Membrane is designed for **Fully Adhered or Mechanically Attached applications** and conforms to the following physical properties.

   a) Physical properties of the membrane are enhanced by a strong, polyester fabric that is encapsulated between the KEE HP enhanced PVC based top and bottom plies. The combination of the fabric and PVC plies provide VersiFlex KEE HP membranes with high breaking strength, tearing strength, and puncture resistance.

   b) Field membrane sheets are packaged in rolls of 5’ and 10’ wide. 50-mil thick membrane is available in lengths of 100', 60-mil is available in 100' lengths and 80-mil is available in 75' lengths. VersiFlex KEE HP Membrane is available in white, gray, light gray, slate gray and tan.

VersiFlex KEE HP Polyester Reinforced PVC Membrane				
Physical Property	**ASTM D4434 Requirement**	**50-mil**	**60-mil**	**80-mil**
Thickness Over Scrim, in. (mm) ASTM D4434 optical method average of 3 areas	0.016 min. (0.40)	0.024 (0.61)	0.029 (0.74)	0.036 (0.91)
Weight, lbs/ft^2 (kg/m^2)	No requirement	0.33 (1.61)	0.40 (1.95)	0.55 (2.68)
Breaking Strength (MD X CD), lbf/in (kN/m) ASTM D751 grab method	275 min. (48)	290 x 290 (51 x 51)	320 x 300 (56 x 52)	330 x 320 (58 x 56)
Elongation break of reinforcement (MD x CD), % ASTM D751 grab method	25 min.	30 x 30	30 x 30	30 x 30
Tearing Strength (MD x CD), lbf (N) ASTM D751 proc. B, 8 in. x 8 in.	90 min. (400)	120 x 125 (534 x 556)	120 x 125 (534 x 556)	140 x 150 (623 x 667)
Low Temperature Bend, ASTM D2135, no cracks 5x at -40ºC	PASS	PASS (-46ºC)	PASS (-46ºC)	PASS (-46ºC)
Linear Dimensional Change, % ASTM D1204, 6 hours at 176ºF	+/- 0.5 max.	0.4 typ.	0.4 typ.	0.4 typ.
Ozone Resistance, no cracks 7x ASTM D1149, 100pphm, 168 hrs	PASS	PASS	PASS	PASS
Water Absorption Resistance, mass % ASTM D570, 166 hours at 158ºF	+/- 3.0 max.	1.25	0.87	0.89
Puncture Resistance – Dynamic, J (ft-lbf) ASTM D5635	20 (14.7)	PASS	PASS	PASS
Puncture Resistance – Static, lbf (N) ASTM D5602	33 (145)	PASS	PASS	PASS
Xenon-Arc Resistance, no cracks/crazing 10x, ASTM G155 0.35 W/m^2 at 340-nm, 63ºC B.P.T. 12,600 kJ/m^2 total radiant exposure 10,000 hours	PASS	PASS	PASS	PASS
Properties After Heat Aging, ASTM D3045, 56 days at 176ºF Breaking Strength, % retained Elongation reinf., % retained	90 min. 90 min.	90 min. 90 min.	90 min. 90 min.	90 min. 90 min.
B.P.T. is black panel temperature				

2.03 Insulations/Underlayments

A. General

1. Roof insulation thickness must be determined by the thermal value required for each project and may be subject to code approval limitations. On projects where a vapor retarder is used, the specifier must calculate insulation thickness to ensure the temperature at the vapor retarder will not fall below the calculated dew point.

2. Multiple layers of insulation are recommended with all joints staggered between layers.

2. For minimum recommended R-Values, previously published by American Society of Heating and Air-Conditioning Engineers (ASHRAE), consult local building code official for applicable requirements.

3. For Insulation fastening pattern and densities refer to Versico Applicable Details and **Design Reference DR-05-23 "Insulation Fastening Patterns"**.

4. When new insulation or cover boards are specified, the use of Versico Insulation and Versico marketed cover board is required. Any of the Versico Insulation/Underlayment may be specified subject to design restrictions included with each of the following tables.

B. **Versico Polyisocyanurate**

Table B1 Polyisocyanurate (See below for product descriptions)				
Insulations / Underlayment	Minimum Thickness	ASTM	Roofing System Acceptability	
			Fully Adhered	Mechanically Fastened
Versico VersiCore Polyiso	*1.5"	C1289, Type II, Class 1, Grade 2 or 3	√	√
Versico VersiCore NH Polyiso	*1.5"	C1289, Type II, Class 1, Grade 2 or 3	√	√
SecurShield Polyisocyanurate	*1.5"	C1289, Type II Class 2, Grade 2 or 3	√	√
SecurShield NH Polyisocyanurate	*1.5"	C1289, Type II Class 2, Grade 2 or 3	√	√
HD Polyiso Composite (SS HD)	2"	C1289, Type IV, Grade 2 or 3	√	√
DuraFaceR Polyiso Composite (OSB)	1.5"	C1289, Type V, Grade 2 or 3	√	√
Design Restrictions				
-Extended Warranty, those with longer duration, higher wind speed, or puncture coverage, may require the use of a cover board over Polyiso Insulation, refer to Warranty Tables in Paragraph 1.04 for applicable requirements. -Maximum Flute Spanability shall be limited to 2-5/8" when 1" Minimum Polyiso Insulation is to be used. -Minimum thickness of insulation board may be restricted by wind speed coverage and warranty duration, refer to Tables V and VI in Paragraph 1.05. *1.5 minimum for fully adhered systems. 1" minimum for mechanically attached systems or as a base layer for fully adhered. Notes: N/A = Not Acceptable √ = Acceptable				

NOTE: SecurShield HD is listed in Paragraph F below.

2. **Versico VersiCore Polyiso** – A foam core insulation board covered on both sides with a medium weight fiber-reinforced felt facer meeting ASTM C 1289, Type II, Class 1, Grade 2 (20 psi) or Grade 3 (25 psi). The product is available in 4' x 8' standard size with a thickness from 1 to 4 inches. 4' x 4' tapered panels are also available.

3. **Versico VersiCore NH Polyisocyanurate** – A foam core insulation board covered on both sides with a glass-reinforced felt meeting ASTM C 1289, Type II, Class 1, Grade 2 (20 psi) or Grade 3 (25 psi). The product is available in 4' x 4' and 4' x 8' standard size with a thickness from ½ inch to 4 inches. VersiCore NH Polyisocyanurate contains zero halogenated flame retardants.

4. **SecurShield Polyisocyanurate** – A foam core insulation board covered on both sides with a coasted glass fiber mat facer meeting ASTM C 1289, Type II, Class 2, Grade 2 (20 psi) or Grade 3 (25 psi). The product is available in 4' x 8' standard size with a thickness from 1 to 4 inches. 4' x 4' tapered panels are also available. These flat board products feature a dark-colored coated-glass facer (CGF) on one side of the insulation board and a light-colored CGF on the other, labeled Ready Flash. Ready Flash Technology allows applicators to manage adhesive flash-off times by choosing between two different-colored facers on every board.

5. **SecurShield NH Polyisocyanurate** – A foam core insulation board covered on both sides with a coated glass facer meeting ASTM C 1289, Type II, Class 2, Grade 2(20 psi) or Grade 3 (25 psi). The product is available in 4' x 4' and 4' x 8' standard size with a thickness from ½ inch to 4 inches. SecurShield NH contains zero halogenated flame retardants.

6. **SecurShield HD Composite** – Composite insulation panel comprised of 1/2-inch high-density (109 psi max) Polyiso cover board laminated during the manufacturing process to SecurShield rigid Polyiso roof insulation meeting ASTM C1289 Type IV, Grade 2 (20 psi) or Grade 3 (25 psi). Available in 4' x 8' boards with thickness from 2" to 4.5". 4' x 4' panels are also available.

7. **DuraFaceR Polyiso Composite (OSB)** –Polyiso insulation bonded on the bottom side with a medium weight fiber-reinforced felt face and laminated with a top surface of 7/16" or 5/8" thick Oriented Strand Board (OSB) meeting ASTM C1289, Type V, Grade 2 (20 psi) or Grade 3 (25 psi). Available in 4' x 8' boards with thickness from 1-1/2" to 4".

C. **EPS : Expanded Polystyrene**

Table C1 EPS : Expanded Polystyrene (See below for product descriptions)				
Insulations / Underlayment	**Minimum Thickness**	**ASTM**	**Roofing System Acceptability**	
			Adhered	**Mechanically Fastened**
InsulFoam I	1”	C578 Type I	N/A	√ (1)(3)
InsulFoam VIII	.75”	C578 Type VIII	N/A	√ (1)
InsulFoam II	.75"	C578 Type II	N/A	√ (1)
InsulFoam IX	.75"	C578 Type IX	N/A	√ (1)
InsulFoam HD Composite (SecurShield HD)	1.5”	C578 Type (I, VIII, II, or IX)	√	√
InsulLam (Various Cover Boards)	1.5"	C578 Type (I, VIII, II. or IX)	√	N/A
InsulFoam SP	1"	C578 Type VIII	N/A	√
InsulFoam SP	2"	C578 Type VIII	N/A	√
Design Restrictions				
-Local Codes must be consulted regarding the acceptance of expanded insulation directly over steel decks. When specified, minimum thickness shall be designated by the manufacturer. -Expanded polystyrene roof insulations cannot be installed directly over coal-tar pitch roof surfaces or existing PVC membranes. A separation layer of minimum 1/2” SecurShield HD, Versico Recovery Board or Polyiso Insulation shall be used. (1) VersiFlex PVC and KEE HP Membrane is not acceptable for this application. (2) May be used as a substrate for VersiWeld QA TPO membrane Only. (3) Minimum 1.25 lbs/cubic ft (pcf) density required For VersiWeld TPO Membrane (White Membrane Only) Notes: N/A = Not Acceptable √ = Acceptable				

NOTE: R-Tech Fanfold Recover Board is listed in Paragraph F below.
NOTE: Insulation boards listed in a through d may be specified beneath SecurShield HD, Versico Recovery Board, Dens-Deck Prime, DensDeck StormX Prime or Securock.

2. **InsulFoam I –** A closed-cell lightweight expanded polystyrene (EPS) that meets ASTM C578, Type I. Nominal density of 1.0 lbs/cubic ft (pcf) available in 4’ x 4’ or 4’ x 8’ sizes with thickness from 1/4” to 40”. Custom lengths, widths and tapered boards are available.

3. **InsulFoam VIII –** A closed-cell lightweight expanded polystyrene (EPS) that meets ASTM C578, Type VIII. Nominal density of 1.25 lbs/cubic ft (pcf) available in 4’ x 4’ or 4’ x 8’ sizes with thickness from ¼” to 40”. Custom lengths, widths and tapered boards are available.

4. **InsulFoam II –** A closed-cell lightweight expanded polystyrene (EPS) that meets ASTM C578, Type II. Nominal density of 1.5 lbs/cubic ft (pcf) available in 4’ x 4’ or 4’ x 8’ sizes with thickness from 1/4” to 40”. Custom lengths, widths and tapered boards are available.

5. **InsulFoam IX –** A closed-cell lightweight expanded polystyrene (EPS) that meets ASTM C578, Type IX. Nominal density of 2.0 lbs/cubic ft (pcf) available in 4’ x 4’ or 4’ x 8’ sizes with thickness from 1/4” to 40”. Custom lengths, widths and tapered boards are available.

6. **InsulFoam HD Composite –** InsulFoam expanded polystyrene (EPS) insulation laminated with a top surface of 1/2” thick SecurShield HD. Available in 4’ x 8’ boards with thickness from 1-1/2” to 7”.

7. **InsulLam –** InsulFoam expanded polystyrene (EPS) insulation laminated with a top surface of 7/16” or 5/8” thick Oriented Strand Board (OSB),1/2” DensDeck Prime, 1/2” Securock, or 1/2" Versico Recovery Board. Available in 4’ x 8’ boards with thickness from 1-1/2” to 7”.

8. **InsulFoam SP –** A closed-cell lightweight expanded polystyrene (EPS) with a factory-laminated fiber glass facer. Nominal density of 1.25 lbs/cubic ft (pcf), available in 4’ x 8’ size, and meets ASTM C578, Type VIII. Designed for low-sloped roof applications that employ mechanically attached or VersiWeld QA TPO membranes.

D. **XPS: Extruded Polystyrene –** Available through Versico is dimensionally stable with high thermal and low water absorption performance capability. XPS is available in varying compressive strengths thicknesses and sizes. Refer to specific Technical Data Bulletins for physical properties and additional technical information.

Table D1 XPS: Extruded Polystyrene (See below for product descriptions)

Insulations / Underlayment	Minimum Thickness	ASTM	Roofing System Acceptability	
			Fully Adhered	Mechanically Attached
Thermapink 18	.75"	Refer to Technical Data Bulletin	N/A	√ (1)
Thermapink 25	1"	Refer to Technical Data Bulletin	N/A	√ (1)
Foamular 400	1"	Refer to Technical Data Bulletin	N/A	√ (1)
Dow Styrofoam Deckmate Plus	1"	Refer to Technical Data Bulletin	N/A	√ (1)

Design Restrictions

-Local Codes must be consulted regarding the acceptance of expanded insulation directly over steel decks. When specified, minimum thickness shall be designated by the manufacturer.
-Extruded polystyrene roof insulations cannot be installed directly over coal-tar pitch roof surfaces or existing PVC membranes. A separation layer of minimum 1/2" SecurShield HD, Versico Recovery Board or Polyiso Insulation shall be used.
-Refer to related products listed in **Spec Supplement P-01-22 "Related Products"** for other products which may be suitable for use. Versico must be contacted for specific requirements.

(1) VersiFlex PVC and KEE HP Membrane is not acceptable for this application.

Notes: N/A = Not Acceptable √ = Acceptable

2. **Thermapink 18 or 25 Extruded Polystyrene**

3. **Foamular 400 Extruded Polystyrene**

4. **Dow Styrofoam Deckmate Plus Extruded Polystyrene**

E. **Versico Vacuum Insulated Panel (VIP)**

Table E1 Vacuum Insulated Panel (VIP) (See below for product descriptions)

Insulations / Underlayment	Minimum Thickness	ASTM	Roofing System Acceptability	
			Adhered	Mechanically Fastened
Versico Optim-R VIP	*1.6"	C1484	√	N/A

Design Restrictions

*2.6" minimum for total installed system including an additional 2 layers of 1/2" SecurShield HD panels; 1 layer on top and 1 layer on bottom of Optim-R. For adhered systems only. Note: Optim-R VIP cannot be cut or punctured.

Notes: N/A = Not Acceptable √ = Acceptable

1. **Optim-R Vacuum Insulated Panel (VIP)** – a high R-Value vacuum insulated panel (VIP) used to provide a low-profile solution when height restrictions exist, such as windows, doors, equipment curbs, etc. Provides an R-38 insulating value in a 2.6" system thickness with up to 35% infill (non-VIP material). Available in 23.6" x 23.6" and 23.6" x 47.2" board sizes.

F. **Cover Boards / Slip Sheets**

Table F1	**Cover Boards / Slip Sheets** (see below for product descriptions)			
Insulations / Underlayment	**Minimum Thickness**	**ASTM**	**Roofing System Acceptability**	
			Fully Adhered	**Mechanically Attached**
SecurShield HD	.5"	C1289, Type II, Class 4 (109 psi max)	√	√
SecurShield HD Plus	.5"	C1289, Type II, Class 4 (109 psi max)	√	√
VersiCore HD	.5"	C1289, Type II, Class 1, Grade 3	N/A	√
DuraStorm VSH	.5"	Refer to Technical Data Bulletin	√	√
Securock Cover Board	.25"	Refer to Technical Data Bulletin	√	√
DensDeck StormX Prime	.625"	C1177	√	√ (1)
DensDeck Prime	.25"	C1177	√	√ (1)
DensDeck	.25"	C1177	N/A	√ (1)
R-Tech Fanfold Recovery Board	.5"	C578 Type (I, VIII, II. or IX)	N/A	√ (2)
HP Protection Mat	6 oz	Refer to Technical Data Bulletin	N/A	√
Design Restrictions				
-Versico Recovery Board and R-Tech Fanfold not recommended for direct use over Type B and F steel decks. -Securock Cover Board, Versico Recovery Board, DensDeck Prime, DensDeck StormX Prime or DensDeck may not be used directly over New or Existing Lightweight Insulating Concrete Decks existing or Structural Concrete. -Due to some warranty restrictions, DensDeck, DensDeck StormX Prime and DensDeck Prime not recommended for use directly over existing roofing membrane without prior written approval from Versico. Contact Versico for specific requirements. -R-Tech Fanfold primarily for use in existing roof re-covers applications or directly over structural or lightweight insulating concrete. (1) Permitted for use on combustible decks with slopes greater than 2" per foot for compliance with external fire codes, refer to UL listings or contact Versico. (2) Install Polymeric Side Up when installing VersiFlex PVC and KEE HP membrane. Notes: N/A = Not Acceptable √ = Acceptable				

2. **SecurShield HD –** a rigid insulation panel composed of a high-density (109 psi max), closed-cell polyisocyanurate foam core laminated to coated-glass fiber-mat facer for use as a cover board or recover board. Available 1/2" thick 4' x 8' panel weight 11 lbs with an R-value of 2.5. These flat board products feature a dark-colored coated-glass facer (CGF) on one side of the insulation board and a light-colored CGF on the other, labeled Ready Flash. Ready Flash Technology allows applicators to manage adhesive flash-off times by choosing between two different-colored facers on every board.

3. **SecurShield HD Plus** - a rigid insulation panel composed of a high-density (109 psi max), closed-cell polyisocyanurate foam core laminated to premium-performance coated-glass fiber-mat facer for use as a cover board or recover board. Available 1/2" thick 4' x 8' panel weight 11 lbs with an R-value of 2.5. Meets an FM 1-90 using only 8 fasteners per 4' x 8' board.

4. **VersiCore HD –** a closed-cell polyisocyanurate foam core insulation board covered on both sides with glass-reinforced felt (GRF) facer meeting ASTM C 1289, Type II, Class 1, Grade 3. The product is available in 4' x 4' and 4' x 8' standard sizes with a thickness of one half inch.

5. **Securock Cover Board –** A uniform composition of fiber-reinforced gypsum without a facer, for use as a cover board or a thermal barrier. Available in 1/4" to 5/8" thick and 4' x 4' or 4' x 8' size boards. Long uninterrupted runs (>200') may require slight gapping due to thermal expansion.

6. **DuraStorm VSH Cover Board** - an engineered composite building material made from a proprietary blend of plastic and cellulose fiber sourced from post-industrial and post-consumer waste streams. DuraStorm VSH is a durable, extremely moisture and mold resistant building material with a core that does not disintegrate or delaminate in the presence of water. Available in 1/2" thick and 4' x 8' size board.

7. **Versico Recovery Board** - A 1/2" or 1" thick high-density wood fiberboard with an asphalt coated facer for use as a cover board or recover board. Available 1/2" or 1" thick and 4' x 4' or 4' x 8' size boards.

8. **DensDeck StormX Prime** – a reinforced gypsum cover board with an enhanced, moisture-resistant core and coated glass mat facers on the top and bottom side. The top surface is pre-primed and provides excellent bond strength for adhered membrane for use as a cover board. DensDeck StormX Prime is extremely durable and is approved for use in assemblies meeting FM's Very Severe Hail (VSH) Classification. Available in 5/8" thickness and 4' x 4' or 4' x 8' size boards.

5. **DensDeck Prime** –gypsum core that incorporates glass-mat facings on the top and bottom side. The top surface is pre-primed and provides excellent bond strength for fully adhered membrane for use as a cover board. Available in 1/4” to 5/8” and 4’ x 4’ or 4’ x 8’ size boards.

6. **DensDeck Cover Board** –gypsum core that incorporates glass-mat facings on the top and bottom side for use as a cover board. Available in 1/4” to 5/8” and 4’ x 4’ or 4’ x 8’ size boards.

7. **R-Tech FanFold Recover Board –** Closed-cell lightweight expanded polystyrene (EPS) with polymeric laminated faces which meets ASTM C 578 for use as a recover board. Polymeric facer compatible with PVC and KEE HP membrane, while metallic side used with EPDM. Available in thicknesses of 3/8” to 3/4” with coverage 4’ x 50’ (2 squares). 4’ x 8’ units are also available.

8. **HP Protection Mat –** A nominal 6-oz per square yard UV resistant polypropylene needle punched fabric used either above the membrane as a slip-sheet for ballast or as an underlayment to the membrane. Available 15’ x 300’ roll (4500 square foot) weighing 0.06 lbs per square foot.

2.04 Related Materials

A. **VersiFlex Flashing (for use with VersiFlex PVC, VersiFlex FRS PVC and VersiFlex KEE HP Membrane Assemblies)**

1. **VersiFlex PVC non-reinforced Flashing** (white, gray, light gray, slate gray and tan) is 60-mil thick and available in rolls **12" and 24" wide by 50' long**. Flashing is used for inside/outside corners and field fabricated pipe flashings when use of pre-molded accessories is not feasible.

2. **VersiFlex PVC Reinforced Cover Strip:** A 8” wide, nominal 60-mil and 80-mil thick, polyester reinforced PVC membrane. Used for stripping in rows of fasteners and plates and covering the butt joints of VersiFlex PVC membranes. Available in rolls 8" wide by 75' long in colors of white, gray or tan. Also available in 60-mil in rolls of 8” wide by 100’ long in white only.

3. **VersiFlex KEE HP Reinforced Cover Strip:** A 8” wide, nominal 60-mil and 80-mil thick, polyester reinforced KEE HP PVC membrane. Used for stripping in rows of fasteners and plates and covering the butt joints of VersiFlex KEE HP PVC membranes. Available in rolls 8" wide by 75' long in colors of white, gray or tan, also available in 60-mil in rolls of 8” wide by 100’ long in white only.

4. **VersiFlex PVC Pressure-Sensitive Cover Strip:** A 6” wide, nominal 35-mil thick non-reinforced KEE HP flashing laminated to a nominal 35-mil, fully cured, pressure-sensitive, synthetic rubber adhesive. Used for stripping in flat metal edgings (i.e. drip edge) of VersiFlex PVC and KEE HP PVC membranes. Available in rolls 6" wide by 100' long in colors of white, gray or tan. Used in conjunction with PVC Step 1 Activator and PVC Step 2 Primer.

5. **VersiFlex PVC Overlayment Strip:** An 80-mil non-reinforced thermoplastic polyvinyl chloride-based membrane used for stripping in PVC Coated Metal roof edging. VersiFlex PVC Overlayment Strip is available in 6” x 100’ rolls with a white top side and gray or tan bottom side to match white and gray VersiFlex PVC membranes.

6. **VersiFlex PVC “T” Joint Cover:** A 4-1/2" diameter, 60-mil thick (white) or 40-mil (gray or tan), pre-cut non-reinforced PVC flashing used to overlay “T” joints at field splices when 60-mil or 80-mil VersiFlex PVC or VersiFlex KEE HP membrane is used.

7. **APEEL Cover Tape:** A 6"-wide, 1,640' long roll of APEEL Protective Film used to protect areas of VersiFlex PVC/KEE HP membrane where APEEL Protective Film has been removed (around details) or was not factory applied (seams). APEEL Cover Tape allows contractors to keep 100 percent of the PVC/KEE HP surface clean during installation and is applied using the APEEL Cover Tape Applicator.

8. **VersiFlex PVC Yellow Pressure-Sensitive Warning Strip:** a nominal 30-mil-thick, non-reinforced membrane flashing laminated to a nominal 30-mil-thick, fully cured, synthetic rubber, pressure-sensitive adhesive and is available in 6"-wide by 100'-long rolls. Pressure-Sensitive Warning Strip can be applied to VersiFlex PVC or KEE HP systems to provide a visual warning of an impending hazard (e.g., roof edge, deep drain sump, skylight, etc.).

9. **VersiFlex PVC Rib Profile:** Used to obtain the appearance of standing seam metal roofing with the performance of a PVC single-ply membrane. The Rib Profile measures 1-1/4” tall and 2-1/8” wide, including the welding flanges, while the vertical profile is a substantial 3/8” thick. The profile has a continuous 1/8” diameter alignment hole, for use with fiberglass connecting pins, as well as a 1/8” fiberglass reinforcing cord for added strength. The Rib Profile is available in white, gray, light gray, slate gray and tan, 10’ lengths and packaged 20 per carton.

10. **Pre-Molded Accessories:**

a) **VersiFlex PVC Inside Corners:** A pre-molded flashing for inside corners. Available in white or gray on tan; 60-mil thick.

b) **VersiFlex PVC Outside Corners:** A pre-molded flashing for outside corners. Available in white, gray or tan; 60-mil thick.

c) **VersiFlex PVC Curb Wrap Corners**: Fabricated flashings are made of 60-mil thick reinforced VersiFlex KEE HP PVC Detail membrane designed to reduce installation time to flash a curb when compared to conventional methods. Each corner is fabricated with a 6" wide base flange and a 12" overall height. Three sizes are available to fit curbs up to 3' by 3' in size. One curb requires 4 corners for a complete installation. PVC Curb Wrap Corners are packaged in boxes containing twelve corners. Custom sizes are available as a special order product requiring lead time.

d) **PVC Universal Corners:** a pre-molded flashing for use in a variety of corner details, including inside and outside corners. Available in white, tan, gray, and light gray;60-mil thick.

e) **VersiFlex PVC Pipe Flashings:** A pre-molded (white, tan, gray, and light gray) pipe flashing used for pipe penetrations. Available in white, gray or tan, for 3/4" – 8" diameter pipes with clamping rings included.

f) **VersiFlex PVC Split Pipe Seals:** A prefabricated flashing consisting of 60-mil thick reinforced VersiFlex Membrane for pipes 1" – 6" in diameter. A split (cut) and overlapped tab are incorporated to allow the pipe seal to be opened and wrapped around the pipe when it is not possible to pull a standard pipe flashing over a round penetration. Available in white, gray or tan.

g) **VersiFlex PVC Square Tubing Wraps:** Fabricated flashings made of 60-mil thick reinforced VersiFlex membrane for square tubing. A split (cut) and overlap tab are incorporated into these parts to allow the seals to be opened and wrapped around a square penetration. Available for 3", 4" and 6" diameter square tubing. Available in white and gray.

h) **VersiFlex PVC Molded Sealant Pockets:** A pre-fabricated, interlocking, 2-piece, injection molded, flexible pocket with a rigid PVC vertical wall and pre-formed deck flanges. Used in conjunction with White One-Part Pourable Sealer for waterproofing pipe clusters or other odd shaped penetrations. Pockets can be adjusted from 11.5” to 7.5” in length by 6” in width by following the cutting lines molded in the pocket. Available in white only.

B. **Primers, Adhesives, Sealants and Cleaners**

Refer to Technical Data Bulletins for material coverage rates and proper usage. Prior to the use of any of the products listed below, consult the Safety Data Sheets for applicable cautions and warnings.

1. **VersiWeld Products**

a) **VersiWeld Bonding Adhesive:** A high-strength, synthetic rubber adhesive used for bonding VersiWeld membrane to various surfaces. The adhesive is applied to both the membrane and the substrate at a coverage rate of approximately 60 square feet per gallon per finished surface (includes coverage on both surfaces).

b) **Aqua Base 120 Bonding Adhesive:** A semi pressure-sensitive, water based adhesive used as a two-sided contact adhesive. Coverage rate is 120 square feet per gallon finished surface (applied to membrane and substrate). Refer to **Spec Supplement G-09-18 “Aqua Base 120 Bonding Adhesive”** for Warranty limitations and other considerations.

c) **CAV-GRIP 3V Low-VOC Aerosol Contact Adhesive/Primer:** a low-VOC, spray-applied aerosol contact adhesive and primer used for a variety of applications: adhering standard VersiWeld TPO and VersiGard EPDM membranes to horizontal and vertical surfaces, adhering VersiFleece membranes to vertical surfaces, as a primer for VapAir Seal 725TR, and as an unexposed asphalt primer for Flexible DASH for insulation attachment.

d) **Cut-Edge Sealant:** A clear colored sealant used to seal cut edges of reinforced VersiWeld membrane. A coverage rate of approximately 225 - 275 linear feet per squeeze bottle can be achieved when a 1/8" diameter bead is applied.

e) **Water Cut-Off Mastic:** Used as a mastic to prevent moisture migration at drains, compression terminations and beneath conventional metal edging (at a coverage rate of approximately 10' per tube or 100' per gallon).

f) **Universal Single-Ply Sealant:** A 100% solids, solvent free, VOC-free, one part polyether sealant that provides a weather tight seal to a variety of building materials. It is white in color and is used for general

caulking such as above termination bars and metal counter flashings and at scuppers.

g) **White One-Part Pourable Sealer**: A one-part, moisture curing, elastomeric polyether sealant used to fill Molded Pourable Sealant Pockets. Packaged in 4, 2-liter foil pouches inside a reusable plastic bucket. 1 pouch will fill 122 cubic inches of volume within a sealant pocket.

2. **VersiFlex Products**

a) **Low-VOC PVC Bonding Adhesive:** A high-strength solvent based adhesive that allows bonding of PVC and KEE-enhanced PVC membrane to various porous and non-porous substrates. The adhesive is applied to both the membrane and the substrate at a coverage rate of approximately 60 square feet per gallon per finished surface (included coverage on both surfaces).

b) **Hydrobond Adhesive:** A wet lay-in, one-sided dispersion adhesive. Compatible with only VersiFlex PVC smooth-backed and VersiFleece membranes, this product is ideal for bonding only PVC membranes to various porous and non-porous substrates (cannot be used with any KEE or KEE HP PVC bareback membranes). Coverage rates vary between 100-133 square foot per gallon using roller or spray applications.

c) **CAV-GRIP PVC Aerosol Contact Adhesive:** a low-VOC, methylene chloride-free adhesive that can be used for a variety of applications including: adhering PVC bareback membranes to a variety of horizontal substrates and vertical walls (cannot be used with any KEE or KEE HP bareback membranes), as well as adhering VersiFleece membranes to vertical walls. Coverage rate is approximately 400 sq. ft. per #40 cylinder and 800 sq. ft. per #85 cylinder as an adhesive for vertical walls, in a double-sided application; 750 sq. ft. per #40 cylinder and 1,500 sq. ft. per #85 cylinder as an adhesive, horizontally, for the field of the roof, in a double-sided applications.

d) **VersiFlex PVC Cut-Edge Sealant:** A clear-colored sealant used to seal cut edges of reinforced VersiFlex membrane. A coverage rate of approximately 225 - 275 linear feet per squeeze bottle can be achieved when a 1/8" diameter bead is applied. Use of Cut-Edge Sealant to seal cut edges of PVC or KEE HP Membranes is not required.

e) **Water Cut-Off Mastic:** Used as mastic to prevent moisture migration at drains, compression terminations and beneath conventional metal edging (at a coverage rate of approximately 10' per tube or 100' per gallon).

f) **Universal Single-Ply Sealant:** A 100% solids, solvent free, one-part, polyether sealant that provides a weather tight seal to a variety of building substrates. Can be used as a termination bar sealant or for use in counterflashing, coping, and scupper details.

g) **White One-Part Pourable Sealer:** A one-part, moisture curing, elastomeric polyether sealant used to fill Molded Sealant Pockets. Packaged in four 1/2 gallon pouches per plastic bucket. One pouch will fill 122 cubic inches of volume within a molded sealant pocket.

h) **PVC and KEE HP Membrane Cleaner:** Used to prepare PVC/KEE HP membranes that have been exposed to the elements prior to heat welding or to remove general construction dirt at an approximate coverage rate of 400 square feet per gallon (one surface).

i) **VersiFlex Low-VOC PVC Step 1 Activator:** A high-strength, solvent-based activator that allows PVC Pressure-Sensitive (PS) Cover Strip to be bonded to VersiFlex PVC or KEE HP membranes. Low-VOC PVC Step 1 Activator meets the < 250 gpl VOC content requirements of the OTC Model Rule. It is specially formulated using a blend of VOC-exempt and non-exempt solvents and follows the state of California Clean Air Act of 1988 (updated in 1997) as further regulated by California's Air Quality Control Districts listing VOC limitations.

j) **VersiFlex Low-VOC PVC Step 2 Primer:** A high-solids-content, polymer based splice primer. This product is applied to KEE HP and PVC membranes to improve the adhesion of PVC Pressure-Sensitive Cover Strip. Low-VOC PVC Step 2 Primer meets the < 250 gpl VOC content requirements of the OTC Model Rule.

k) **VersiFlex PVC Step 2 Primer:** A high-solids-content, clear (translucent color), polymer-based splice primer used to prepare KEE HP and PVC membranes to be bonded to PVC Pressure-Sensitive Cover Strip.

2.05 Fastening Components

A. **Fasteners**

The following Table illustrates criteria for fastening of Versico Insulation with the referenced roof deck and includes minimum penetration requirements and pilot hole criteria.

Insulation Fastening Criteria

Deck Type	Versico Fasteners (1)	Min. Penetration	Pilot Hole Depth	Pilot Hole Diameter
Steel or Lightweight Insulating Concrete over Steel	ASAP or InsulTite	3/4"	N/A	N/A
Structural Concrete, rated 3,000 psi or greater	CD-10	1"	Note (2)	7/32"
	MP 14-10	1"	Note (2)	3/16"
Wood Plank, min. 15/32" thick Plywood or min. 7/16" OSB	HPV, ASAP or InsulTite	Min. 1" (3)	N/A	N/A
Cementitious Wood Fiber	Polymer Gyptec	1-1/2"	Note (4)	N/A
Gypsum	Polymer Gyptec	1-1/2"	Note (2)	7/16", 1/2" or 9/16" (5)

Notes: N/A = Not Applicable

(1) For Fully Adhered Systems, only 3" diameter insulation fastening plates can be used for insulation attachment.
(2) The pilot hole must be predrilled to a sufficient depth to prevent contact between the fastener point and any accumulated dust in the predrilled hole. This will help prevent bottoming out of the fastener during installation.

(3) For wood planks only, fastener penetration shall not exceed 1-1/2".
(4) Most cementitious wood fiber decks do not require pre-drilling; however, Versico should be contacted prior to installation for verification of specific types that may require a pilot hole to be predrilled.

(5) Pilot hole size may be varied to maximize pullout resistance.

All Fasteners listed below can be used with VersiFlex Roofing Systems. Refer to the applicable specification for specific requirements.

1. **HPVX Fastener:** A heavy duty #15 threaded fastener with a #3 Phillips drive used with Versico's HPVX Fastening Plate to secure Mechanically Attached Roofing Systems. It is used on minimum 22 gauge steel decks or minimum 15/32" CDX plywood decks. It is also designed to offer an optimum combination of driving performance, back-out and corrosion resistance with excellent pullout performance.

2. **HPV-XL Fastener:** An oversized diameter #22(.315") steel, threaded fastener used in conjunction with HPV-XL Plates for membrane securement into minimum 22 gauge steel or wood decks on Mechanically Attached Roofing Systems.

3. **HPV Fastener:** A threaded E-coat square head fastener **for insulation attachment only**. Used into steel, wood plank, minimum 15/32" thick plywood or minimum 7/16" thick oriented strand board (OSB).

4. **Pre-Assembled InsulTite ASAP Fastener**: Versico's InsulTite Fastener pre-assembled with a 3" diameter plastic plate used for **insulation attachment only** on Fully Adhered and Mechanically Attached Roofing Systems. Installed using Olympic Fasteners' Fastening Tool.

5. **InsulTite Fastener**: A threaded Phillips drive fastener used with Versico Insulation Plates for **insulation attachment** to steel or wood decks.

6. **CD-10 Fastener:** A hammer-driven, non-threaded E-Coat fastener for use with structural concrete decks rated 3,000 psi or greater.

7. **MP 14-10 Concrete Fastener:** A #14 threaded fastener with a #3 Phillips drive used for minimum 3,000 psi concrete decks.

8. **Polymer Gyptec Fastener:** A glass-filled nylon auger fastener designed for securing insulation and/or membrane to specialty decks such as cement wood fiber or gypsum.

B. **Fastening Plates**

1. **HPVX Plate**: A 2-3/8" diameter metal barbed fastening plate used with Versico HPVX CD-10 or MP 14-10 Fasteners for membrane or insulation securement. This plate can be used for membrane or insulation securement on Mechanically Attached Roofing Systems.

2. **HPV-XL Plate**: A 2-3/8" diameter metal barbed fastening plate with an oversized hole for use with Versico HPV-

XL Fasteners for membrane securement on Mechanically Attached Roofing Systems.

3. **Seam Fastening Plate**: A 2" diameter metal plate used for insulation attachment on Mechanically Attached Systems or membrane securement at angle changes on Fully Adhered Systems in conjunction with the appropriate Versico Fastener.

4. **Insulation Fastening Plate**: A nominal 3-inch metal plate used for insulation attachment in conjunction with the appropriate Versico Fastener.

5. **SecurFast Insulation Fastening Plates:** A nominal 2-7/8" hexagon metal plate used for insulation attachment in conjunction with the appropriate Versico Fastener.

6. **Accutrac Insulation Plates:** A nominal 3" square, recessed or flat bottomed, metal plate used for insulation attachment in conjunction with the appropriate Versico Fastener. Flat bottom plate is used with manufactured Philips Head fasteners only.

7. **Oval Plate:** A 2-3/4" x 1-1/2" oval metal barbed fastening plate for use with Versico HPVX fasteners for securement of 10' wide PVC and KEE HP membranes on Mechanically Attached Roofing Systems.

2.06 Insulation Securement Adhesive

1. **Flexible DASH Adhesive:** A two-component (Part A and B), low-rise polyurethane adhesive designed for bonding VersiFleece membrane and/or insulation to various substrates. Coverage rates can be found in Paragraph 3.05 'Membrane Placement and Securement'. Flexible DASH Adhesive is packaged in 50- and 15-gallon drums, as well as, 5-gallon Jug and Dual Cartridges that can be applied in full spray or extrusion, depending on dispensing type.

2. **Flexible DASH Dual Tank:** A two component (Part A and B), extrusion applied, low rise adhesive for bonding insulation to various surfaces. DASH Dual Tanks utilize an HFO blowing agent. HFO (hydrofluoroolefin) blowing agents are widely recognized as the next-generation environmentally friendly blowing agent, replacing their HFC (hydrofluorocarbon) predecessor. When extruded at 12" on center the coverage rate is 3,500 to 3,700 sq.ft. per set of Dual Tanks.

3. **Flexible DASH Dual Cartridge and 5-gallon Jug Adhesive:** A two component (Part A and B), extrusion applied, low rise adhesive for bonding insulation to various surfaces. When extruded at 12" on center the coverage rate is 400-600 sq.ft. per carton of Dual Cartridges or 2,000-2,500 sq.ft. per set of 5-gallon Jug Adhesive.

4. **OlyBond 500 Bag in a Box** – A two-component, polyurethane, low-rise expanding adhesive used to bond insulation to various substrates. Packaged in 5-gallon boxes of Part A and Part B formulations that are applied using a mechanical dispenser system. Applied in 1/2" to 3/4" beads or ribbons at the rate of 1 gallon per 150-250 square feet for 12" o.c. bead spacing. Perimeter bead spacing patterns and acceptable insulation and deck types are listed in the applicable Product Data Sheet.

5. **OlyBond 500 BA Spot Shot** - A two-component, polyurethane construction grade, low-rising expanding adhesive designed for bonding insulation to various substrates. Applied in 1/2" to 3/4" beads or ribbons using a portable 1:1 applicator (oversized, dual-cartridge caulking gun). Refer to the Product Data Sheet for bead spacing with reference to building height.

2.07 Vapor / Air Barrier

1. **General**

   If insulation is to be fully adhered to the vapor retarder with Flexible DASH Adhesive, the vapor retarder must be compatible and shall be fully adhered to the substrate. Available products include Versico 725 Air and Vapor Barrier and spray or roller applied butyl coatings. Installation requirements for Versico's VapAir Seal 725TR Air and Vapor Barrier are identified in **Spec Supplement G-07-20 "Application Procedures for 725TR Air and Vapor Barrier"** and Versico's VapAir Seal MD Air and Vapor Barrier are identified in **Spec Supplement G-12-19 "Application Procedures for VapAir Seal MD air and Vapor Barrier**" in the Versico Technical Manual.

2. **Versico VapAir Seal 725TR Air and Vapor Barrier** - A 40-mil thick composite consisting of 35-mil self-adhering rubberized asphalt membrane laminated to an 5-mil UV resistant poly film with an anti-skid surface which is fully compatible with Flexible DASH Adhesive. 725TR can also function as a temporary roof for up to 120 days. Available in rolls 39" wide by 100' long (325 square feet).

3. **Versico VapAir Seal MD Air and Vapor Barrier** – a reinforced composite aluminum foil with self-adhesive SBS backing and removable poly release film. Used for direct application over metal decks. Used for direct application over metal decks. Available in rolls 42.5" wide by 131.23" long (460 square feet).

4. **CAV-GRIP 3V Low-VOC Aerosol Contact Adhesive/Primer:** a low-VOC, methylene chloride-free adhesive that can be used for a variety of applications including: enhancing the bond between Versico's VapAir Seal 725TR and various substrates. Coverage rate is approximately 2,000-2,500 sq. ft. per 40 lb cylinder and 4,000-5,000 sq. ft. per 85 lb cylinder as a primer, in a single-sided application.

5. **CCW-702 Primer and 702LV Primer (Low-VOC)** - A single component, solvent based, high-tack primer used to provide maximum adhesion between Versico 725TR Air and Vapor Barrier and an approved substrate. Applied by spray or long nap roller with a coverage rating ranging from approximately 300 to 350 square feet per gallon on smooth finishes (i.e., concrete) to 75 square feet per gallon on porous surfaces (i.e., Dens-Deck Prime gypsum board). Available in 5-gallon containers. CCW-702LV Primer contains less than 250g/L VOCs and meets South Coast Air Quality Management District (SCAQMD) and Leadership in Energy and Environmental Design (LEED) Requirements for Volatile Organic Compounds.

6. **CCW-702WB –** a high-tack, water-based contact adhesive for promoting adhesion of Versico air/vapor barrier membranes and an approved substrate (i.e., concrete, Dens-Deck Prime and Securock). Applied by roller, brush or spray with an application rate of approximately 200 sq. ft. per gallon. Available in 5-gallon containers. CCW-702WB Primer contains 57g/L VOCs and meets South Coast Air Quality Management District (SCAQMD) and Leadership in Energy and Environmental Design (LEED) Requirements for Volatile Organic Compounds.

2.08 Metal Accessories, Edgings, Coping and Terminations

A. General

Products listed below can be used with any of the available Versico Roofing Systems. Refer to the applicable Versico details and installation instruction manuals for specific installation criteria.

B. Products

1. **VersiFlex PVC Coated Metal:** A 24 gauge, galvanized steel sheet coated with a layer of 40-mil non-reinforced VersiFlex Flashing. The sheet is cut to the appropriate width and used to fabricate metal drip edges or other roof perimeter edging profiles. VersiFlex Membrane may be heat welded directly to the coated metal. Coated metal is available in sheets 4' x 10' and comes packaged 10 sheets per pallet. Available in white, gray, light gray, slate gray and tan.

2. **VersiTrim 200/300 Drip Edge:** Pre-fabricated PVC-coated metal edging. Heat-weld membrane directly to edge. Available in sizes up to 8" fascia height and in colors: white, gray or tan.

4. **VersiTrim 200 Fascia**: A snap-on edge system consisting of a 24 gauge galvanized metal water dam and 40, 50 or 63-mil thick aluminum Kynar 500, clear and colored anodized finish or 22 or 24 gauge steel, Kynar 500 finish. The fascia is available in a variety of colors and heights varying from 5" to 12-1/2". Custom fascias and colors are available upon request. ANSI/SPRI ES-1 certified.

5. **VersiTrim 2000 Standard Fascia:** An anchor bar roof edge fascia system consisting of heavy .100" thick extruded aluminum bar, corrosion resistant stainless steel fasteners and snap-on fascia cover used with Fully Adhered, Mechanically Attached assemblies. Refer to installation instructions for various sizes, colors and accessories ANSI/SPRI ES-1 certified. Also available in **VersiTrim 2000 Extended Fascia** (Up to 13" Face Height) and **VersiTrim 2000 Canted Fascia**.

6. **VersiTrim 3000 Roof Edge System**: A metal anchor bar fascia system consisting of a 20 gauge steel retainer bar, corrosion resistant fasteners and a 32, 40, 50 or 63-mil thick aluminum or 24 gauge steel snap-on fascia cover. It is for use in Fully Adhered and Mechanically Attached Roofing Systems. ANSI/SPRI ES-1 certified. Also available in **VersiTrim 3000XT Roof Edge System** (Up to 13" Face Height).

7. **Termination Bar:** A 1" wide and 98-mil thick extruded aluminum bar pre-punched 6" on center which incorporates a sealant ledge to support Lap Sealant and provide increased stability for membrane terminations.

8. **VersiTrim Term Bar Fascia:** A 1.75" wide formed aluminum termination bar with pre-slotted fastening holes for ease of locating and installing. The decorative cover is available in 0.040" aluminum or 24-gauge galvanized steel. VersiTrim Term Bar Fascia is manufactured in 12' lengths for fewer joints/seams, fewer sections to handle and faster installation.

9. Refer to **Spec Supplement P-01-22 "Related Products"** for other edgings and coping materials.

2.09 Roof Walkways

Walkways are to be specified at all traffic concentration points (i.e., roof hatches, access doors, rooftop ladders, etc.), and if regular maintenance, once a month or more, is necessary to service rooftop equipment.

1. Walkway Types

a) **VersiFlex PVC Heat Weldable Walkway Rolls:** Manufactured from specially compounded PVC, offering superior tear, puncture and weather resistance. Designed to protect VersiFlex (PVC/KEE HP) membranes in those areas exposed to repetitive foot traffic or other hazards. Walkway material may be heat welded to VersiFlex (PVC/KEE HP) membranes using an automated heat welder or hand held heat welder. Walkway Rolls are 36" wide by 60' long and are nominal 80-mil and 110-mils thick. Available in gray only.

c) **VersiFlex PVC Crossgrip Walkway Rolls:** Manufactured from PVC and may be used in lieu of standard VersiFlex PVC Walkway Rolls when a walkway is to be loose-laid and not secured to the membrane. Loose-laid Crossgrip PVC Walkway Rolls are effective for winds up to 55 mph. Rolls are 36” wide by 33’ long, available in white, gray and yellow.

d) **Versico Interlocking Rubber Pavers:** 24" X 24" X 2" thick rubber paver weighing approximately 24 pounds per unit, 6 pounds per square foot manufactured from recycled rubber, which provides a resilient, shock absorbing, weather resistant surface. Designed primarily for use as a walkway or on terrace areas offering a unique, environmentally sound advantage over concrete pavers. Features include freeze/thaw stability, bi-directional drainage and no breakage concerns. Available in black and terra cotta.

e) **Hanover Ballast and Lightweight Ballast Pavers:** The standard, 24” x 24” x 1-13/16” thick, Ballast Paver comes in a natural color and a non-slip Diamond finish and weighs 22 lbs/sq. ft. The Lightweight, 23-1/2” x 23-1/2” x 1-1/4” thick, Ballast Paver comes in a natural color and a non-slip diamond finish and weighs 15 lbs/sq. ft. Both pavers can be used as ballast or walkways.

2.10 Other Versico Accessories

Refer to **Spec Supplement P-01-22 “Related Products”** for additional accessories.

Part III – Execution

Prior to commencing with the installation of any of the VersiFlex Membrane Systems refer to Paragraph 1.05 "Warranty Tables" for applicable components and proper securement method suitable for the appropriate warranty coverage.

Requirements listed in this specification are considered minimum and are intended for the sole purpose of obtaining a Versico Warranty. Additional requirements dictated by Regulatory Agencies, Building Insurance or Specifiers must be complied with and are considered to be beyond the scope of this specification.

3.01 General

A. Safety Data Sheets (SDS) must be on location at all times during transportation, storage and application of materials. The contractor shall follow all safety regulations as recommended by OSHA and other agencies having jurisdiction.

B. Subject to project conditions, it is recommended to begin the application of this roofing system at the highest point of the project area and work to the lowest point to prevent water infiltration. This will include completion of all flashings, terminations and daily seals.

C. A proper substrate shall be provided by the building owner. The structure shall be sufficient to withstand normal construction loads and live loads.

3.02 Roof Deck /Substrate Criteria

A. Proper decking shall be provided by the building owner. The building owner or its designated representative must ensure that the building structure is investigated by a registered engineer to assure its ability to withstand the total weight of the specified roofing system, as well as construction loads and live loads, in accordance with all applicable codes. The specifier must also designate the maximum allowable weight and location for material loading and storage on the roof.

B. Withdrawal resistance tests are strongly suggested to determine the suitability of a roof deck. Refer to **Design Reference DR-06-19 "Withdrawal Resistance Criteria"** in the Versico Technical Manual proper procedures for conducting pullout tests.

C. Defects in the substrate must be reported and documented to the specifier, general contractor and building owner for assessment. The Versico Authorized Contractor shall not proceed with installation unless defects are corrected.

D. On structural concrete decks, when a vapor retarder is not used, gaps in the deck along the perimeter and around penetrations must be sealed along with vertical joints between tilt-up panels, if present, to prevent infiltration of hot humid air and possible moisture contamination resulting from condensation. This is specifically important when adhesive is used to attach the roof insulation. (Migrating warm air through gaps left unsealed can result in condensation and weakening of the insulation bottom facer leading to possible board dislodgement.)

E. **For all projects** (new or retrofit), the substrate must be relatively even without noticeable high spots or depressions. Accumulated water, ice or snow must be removed to prevent the absorption of moisture in the new roofing components and roofing system.

F. Prior to the placement of membrane underlayment, clear the substrate of debris and foreign material that may be harmful to the roofing system. Gaps greater than 1/4" must be filled with an appropriate material.

G. For direct application over an acceptable roof deck/substrate or when HP Protective Mat is specified and approved by Versico as the membrane underlayment in accordance with the Roof Deck and Substrate Criteria Table, the substrate must be smooth, steel trowel finished (structural concrete), free of debris, protrusions, sharp edges and loose and foreign material. Cracks or voids in the substrate, greater than 1/4", must be filled with an appropriate material.

H. The following chart identifies the acceptable roof decks/substrates and the minimum underlayment requirements, Tables in Paragraph 1.05 for specific acceptable underlayment types, based on warranty duration:

Roof Deck & Substrate Criteria

Acceptable Roof Deck/Substrate	PVC / KEE HP PVC Membrane	
NEW CONSTRUCTION	Adhered	Mechanically Fastened
Steel (min. 22 gauge) (1)(2), Wood Plank (3/4" min.), or Fibrous Cement	Insulation	Insulation
Structural Concrete (min. 3000 psi)	Direct Application	Insulation
Plywood (min. 15/32" thick) or Oriented Strand Board (min. 7/16" thick)	Direct Application (5)	Direct Application (5)
Lightweight Insulating Concrete	Direct Application (5)(10)	Insulation
RETROFIT / NO TEAR-OFF	Adhered	Mechanically Fastened
Existing Smooth Surface BUR (3)(8) or Mineral Surface Cap Sheet	Insulation	Insulation
Gravel Surfaced BUR (3)(4) or Coal Tar Pitch (3)(4)(12)	Insulation	Insulation
Modified Bitumen (11)	Insulation	Insulation
Existing Single-Ply (11)	Insulation	Direct Application (6)
Sprayed-in-place Urethane	Complete Tear-off Required	Complete Tear-off Required
RETROFIT / TEAR-OFF	Adhered	Mechanically Fastened
Existing roof material removed (regardless of deck type)	Insulation	Insulation

Notes:
(1) Local codes must be consulted regarding thermal barrier requirements.
(2) Mechanically Fastened Systems cannot be specified on steel decks less than 22 gauge or for corrugated steel decks, regardless of gauge. Refer to the Metal Retrofit Roofing System Specification, published separately, for installation options.
(3) Loose gravel must be removed to avoid entrapment of moisture.
(4) Existing coal tar could drip back into the building, especially when new insulation does not provide sufficient thermal value to prevent the surface of the coal tar from softening.
(5) Maximum Warranty Duration of 20 Years.
(6) An approved underlayment is required over existing ballasted (ballast removed) single-ply systems and PVC roofing systems of any type.
(7) Direct application permitted over smooth surfaced modified bitumen. To reduce the probability of cold welds, membrane shall be positioned with length of sheets parallel to modified bitumen field seams. At end laps or other locations where splices intersect modified bitumen field seams, 6" wide VersiFlex Flashing must be heat welded over intersections.
(8) Existing Type III or IV smooth asphalt BUR Only.
(9) Possible staining/discoloration of the membrane may result when installing this system directly over existing smooth surfaced BUR or modified bitumen. If aesthetics are critical, an approved insulation should be specified beneath the membrane.
(10) New approved cellular lightweight insulating concrete must have a minimum compressive strength of 225 psi. Except when the lightweight concrete is poured over slotted steel decks, pressure relief vents must be installed every 2,000 square feet. Direct application is not permitted where lightweight concrete is poured over an existing roofing material. Equilibrium moisture content after hydration/curing shall not exceed 12%.
(11) Maximum warranty available 20 YR with 55 MPH peak gust wind speed coverage. Versico may be contacted for other warranty options.
(12) If insulation is specified to be secured to an existing coal tar pitch roof with Versico Flexible DASH Adhesive or hot asphalt, minimum 1.5” thick Polyisocyanurate is the required minimum thickness when white membrane is specified.

I. **On retrofit - recover projects**, cut and remove wet insulation, as identified by the specifier, and fill all voids with new insulation of type specified so it is relatively flush (+/- 1/4") with the existing surface.

1. Entrapment of water between the old and new membrane can damage and deteriorate new insulation/underlayment between the two membranes. **If a vapor retarder or air barrier is not specified**,

Versico recommends the existing membrane be perforated to avoid potential moisture accumulation and to allow the detection of moisture to enable the building owner to take corrective action. This can be accomplished by drilling approximately 3/4" diameter holes every 100 square feet in the existing built-up roof or single-ply membrane (excluding non-reinforced PVC membrane).

2. If total removal of existing PVC membrane is not specified, existing non-reinforced membrane may be cut into maximum 10' x 10' sections, when the new insulation or membrane underlayment is to be mechanically attached.

3. Regardless of the type of membrane or assembly selected, any loose flashings at the perimeter, roof drains and roof penetrations must be removed.

4. When installing this roofing system over an existing **gravel surfaced built-up roof, loose gravel must be removed.** Power brooming is recommended by Versico to remove the loose gravel, which may trap moisture. Any uneven areas of the substrate must be leveled to prevent insulation from bridging.

8. On retrofit projects, all existing phenolic insulation must be removed.

9. Refer to table above for other Recover/Retro-fit considerations.

J. **Vapor Retarder Installation**

For Versico's Vapor Retarder refer to **Spec Supplement G-07-20 "Application Procedures for 725TR Air and Vapor Barrier**". Follow the respective vapor retarder manufacturer's recommended installation procedures and the specifier's instructions for the installation of the product specified. When insulation is to be set in adhesive, verify compatibility with Versico when Vapor Retarder by others is specified.

K. **Wood Nailers**

1. Install wood nailers in locations that have been designated by the specifier and as approved by Versico. Refer to **Design Reference DR-08-11 "Wood Nailers and Securement Criteria"** for Wood Nailer Criteria.

2. Wood nailers are not covered by the Versico Warranty.

3.03 Insulation/Underlayment

A. **General**

1. Roof insulation thickness must be determined by the thermal value required for each project and may be subject to code approval limitations. On projects where a vapor retarder is used, the specifier must calculate insulation thickness to ensure the temperature at the vapor retarder will not fall below the dew point.

2. New construction projects in cold climate regions, the use of vapor retarders or air barriers is strongly recommended to protect insulation from moisture generated during construction.

3. Multiple layers of insulation are recommended with all joints staggered between layers.

4. Do not install more insulation/underlayment than can be covered by membrane in the same day.

5. All insulation boards must be butted together with no gaps greater than 1/4". Gaps greater than 1/4" are not acceptable.

6. Restrictions:

   a) Versico Roofing Systems cannot be specified in conjunction with Phenolic Insulation.

   b) Fiberglass insulation cannot be specified even if overlaid with additional insulation or membrane underlayment.

   c) For all Thermoplastic Roofing Assemblies, the use of insulation by others is not acceptable when a Versico Membrane System Warranty is specified. Versico insulation must be used.

   d) The direct application of VersiFlex Membrane over expanded or extruded polystyrene insulation is not permitted.

3.04 Insulation Attachment

A. **General**

1. Prior to proceeding with insulation securement refer to Warranty Tables, Paragraph 1.05, for attachment method and appropriate fastening density required for the specific Versico Warranty.

B. **Fully Adhered Roofing Systems**

1. **Mechanical Attachment**, insulation fastening density will vary based on insulation type, thickness, and required warranty. Warranty Tables in Paragraph 1.05 should be referenced for fastening density and the appropriate Versico detail may be consulted to identify acceptable fastening pattern.

   a) For code compliance, increased fastening density may be required depending upon project wind speed and wind uplift requirement. Refer to **Design Reference DR-05-23 "Insulation Fastening Patterns"** for fastening pattern reference.

   b) When insulation securement is to comply with Factory Mutual (FM) approvals, follow the requirements of the specifier concerning additional securement at the roof perimeter and corners. Also refer to **Design Reference DR-05-23 "Insulation Fastening Patterns"** for various fastening patterns.

   c) On Reroof/No Tear off projects with a maximum roof height of 40', any Versico Insulation (i.e., 1/2" SecurShield HD, Versico Recovery Board, Polyisocyanurate less than 1-1/2" thick) may be secured at the minimum rate of 11 Fasteners per 4' x 8' board (5 Fasteners per 4' x 4' board).

   d) When Oriented strand board (OSB) is specified for membrane underlayment, utilize DuraFaceR OSB/Polyiso Composite, mechanically fastened to the deck at the rate 17 fasteners for 4 x 8 board in accordance with Versico Details. When positioning OSB, butt edges and stagger joints of adjacent panels.

2. **Adhesive attachment**, Versico Urethane Adhesive (Flexible DASH or Olybond) may be used. When bead adhesive is specified bead spacing will vary based on Warranty coverage, refer to Warranty Tables, Paragraph 1.05 and appropriate Versico Details.

   CAUTION: Apply adhesive bead so that the distance from the edge of the board does not exceed half the bead spacing (i.e. within 6" of bead spacing of 12" O.C.).

   CAUTION: **Do not apply urethane adhesives directly to un-weathered asphalt, (new or residual)**.

   CAUTION: **Especially in cold regions on tear-off projects or new construction gaps between horizontal and vertical surfaces of the roof area as well as gaps around penetrations must be sealed to prevent interior warm air from infiltrating and condensing within the roofing assembly. Condensing moisture could weaken bottom insulation facer and eventually result in dislodgement or loose boards when adhesive is used.**

   a) On FM Global insured projects, consult FM Global's local representative concerning the use of adhesive to attach insulation to steel decks.

   b) Check to ensure the substrate is clean, free of debris, other contaminants, and dry. Adhesive cannot be applied to a wet or a damp surface.

   c) Apply Adhesive over the dry substrate area at the coverage rates indicated in **Spec Supplement G-02-22 "VersiFleece Membrane and Insulation Attachment with Flexible DASH Adhesive"**.

   d) Allow the adhesive to rise up approximately 1/8" and develop strings prior to setting insulation boards into adhesive.

      NOTE: String-time is measured by touching the adhesive with a splice wipe and looking for development of "strings" of adhesive as you pull the splice wipe out of the adhesive. With Flexible DASH Adhesive, string time is generally around 1-1/2 – 2 minutes after application at room temperature.

   e) **Walk the boards into the adhesive and roll using the 30" wide, 150 pound weighted segmented steel roller** to ensure full embedment. Optimal set up time should be approximately 5 to 7 minutes.

      CAUTION: Walking on the boards immediately after placement in adhesive can cause slippage/movement until the adhesive has started to set up.

On roofs with a slope greater than 1/2" in 12", begin adhering insulation at the low point and work upward to avoid slippage.

A person should be designated to walk/roll-in all boards and trim/slit or apply weight as needed to ensure adequate securement.

3. **Alternate attachment method**, the specifier may select an alternate insulation attachment that incorporates a solid mopping of the insulation with hot asphalt (ASTM D312, Type III or IV). If the attachment method is to be covered by the Versico Warranty, Versico must be contacted for specific requirements. Upon review and acceptance by Versico, the maximum warranty coverage available is limited to 15 Year with maximum Peak Gust Wind Speed Coverage of 55 mph, for other warranties contact Versico.

   a) Extruded or Expanded Polystyrene insulation are not acceptable when this alternate attachment method is specified.

   b) The existing gravel surfaced built-up roof must be scraped to remove all loose gravel. Large blisters that may prevent continuous embedment of insulation must be repaired. The surface of the substrate must also be dry and clear of foreign material.

   c) On coal tar pitch, when deemed compatible by the specifier, minimum 1.5" Polyisocyanurate is the required membrane underlayment when using darker heat weldable membranes (tan or gray). If VersiFlex white membrane is used, minimum 1" thick Polyisocyanurate is required.

   d) For successful attachment, proper asphalt temperatures must be maintained and the specifier's requirements concerning the installation of a base sheet (where required) and quantity of hot asphalt must be followed.

   e) The maximum insulation board size shall not exceed 4' X 4'. Trim insulation boards around crickets and saddles to ensure continuous embedment.

   f) Care must be exercised to prevent contamination of the top surface of the insulation. Asphalt oozing through insulation joints must be wiped from the surface. Contact with fresh asphalt can result in discoloration of the VersiFlex membrane.

   g) A grid shall be installed subdividing the roof in individual sections of 2400 square feet. Required for warranties up to 10 years with wind speed coverage up to 55mph.

   h) The wood nailers are installed relatively flush with the insulation surface and the membrane is to be fastened with seam fastening plates and Versico HPV or HPVX Fasteners on 12” o.c. For wood nailer installation, refer to **Design Reference DR-08-11 “Wood Nailers and Securement Criteria**”.

C. **Mechanically Attached Roofing Systems**

1. **Versico Fasteners and Fastening Plates are required for insulation securement**. Refer to Insulation Fastening Criteria Table in Paragraph 2.05 for appropriate fastener and deck penetration. The fastener can be used with either 2-3/8" diameter HPVX/HPV-XL Plates OR 3" diameter Insulation Fastening plate.

2. **Any Versico approved insulation or cover board** shall be mechanically fastened to the roof deck at the minimum rate of **1.25 fasteners and plates per every 8 square feet (**5 fasteners in a 4 x 8 board) for minimum 1-1/2” thick insulation and coverboards. Insulation less than 1-1/2” thick requires the use of 8 fasteners and plates in a 4’ x 8’ board (1 per 4 square feet).

   CAUTION: Versico Polyisocyanurate Insulation with a thickness less than 1.5" installed over an existing roofing membrane without a tear-off must be mechanically attached to the roof deck with a minimum of **1 fastener and plate for every 4 square feet** or less of insulation.

2. Use of DensDeck, DensDeck Prime and DensDeck StormX Prime should be limited to assemblies with slopes greater than 2” per foot to ensure compliance with external fire codes.

3.05 Membrane Placement and Securement

A. **General**

1. **Ensure** that water does not flow beneath any completed sections of the membrane system by completing all flashings, terminations and daily seals by the end of each workday.

2. **Sweep** all loose debris from the substrate.

3. If aesthetics are of concern, protection should be specified to avoid discoloration of the white membrane surface resulting from adhesive residue or excess foot traffic.

4. In addition to the primary membrane securement (Bonding for Fully Adhered and Fastening for Mechanically Attached Assemblies), additional membrane securement is required at the perimeter of each roof level, roof section, curb, skylight, interior wall, penthouse, etc., at any inside angle change where slope or combined slopes exceed 2" in one horizontal foot, and at other penetrations in accordance with the applicable Versico details. Refer to Paragraph F for additional membrane securement.

B. **Membrane Placement**

Maximum 10' wide VersiFlex Membrane is fully adhered or mechanically attached to an approved insulation or substrate.

1. **Position** VersiFlex membrane over the acceptable substrate. For a mechanically attached assembly ensure the proper number of perimeter sheets are positioned along the perimeter of the roof as outlined in Paragraph 1.05 "Warranty Tables".

2. **Position** field sheets perpendicular to the steel deck flutes in Mechanically Attached Applications.

3. **Place** adjoining membrane sheets in the same manner, overlapping edges appropriately to provide for the minimum overlap width. It is recommended all overlaps be shingled to avoid bucking of water.

C. **Membrane Securement / Bonding - Fully Adhered Roofing System**

1. **Adhere** VersiFlex membrane to an acceptable substrate with Versico Bonding Adhesive. CAV-GRIP PVC aerosol adhesive may be utilized with VersiFlex PVC membranes (cannot be used with any KEE or KEE HP bareback membranes). Comply with Labels, Safety Data Sheet (SDS) and Technical Data Bulletins for installation procedures and use. Adhesive must be applied to both the membrane and the surface to which it is being bonded.

2. On projects at high altitudes (6,000' and above), rapid flash-off (drying) of Bonding Adhesive and Primers will occur due to low atmospheric pressure.

3. **Fold** membrane sheet back so half the underside is exposed. Sheet fold should be smooth without wrinkles or buckles.

4. **Stir** Bonding Adhesive thoroughly scraping the sides and the bottom of the can (minimum 5 minutes stirring is recommended). Bonding surfaces must be dry and clean.

5. **Apply** Bonding Adhesive to the exposed underside of the membrane and the corresponding substrate area. Do not apply Bonding Adhesive along the splice edge of the membrane to be heat welded over adjoining sheet.

   When using **VersiFlex Low-VOC Bonding Adhesive**, a coverage rate of approximately 120 square feet per gallon per one surface (membrane or substrate) or approximately 60 square feet per gallon per finished surface (includes coverage on both membrane and substrate) shall be achieved. **Apply** adhesive evenly, without globs or puddles with a plastic core, medium nap paint roller to achieve continuous coating of both surfaces. A 9-inch roller will easily fit into the 5-gallon containers.

   A mechanical roller dispenser can be used to apply Bonding Adhesive when the continuous coating and coverage rate noted above are maintained.

   CAUTION: Due to solvent flash-off, condensation may form on freshly applied Bonding Adhesive when the ambient temperature is near the dew point. If condensation develops, possible surface contamination may occur and the application of Bonding Adhesive must be discontinued. Allow the surface to dry and apply a thin freshener coat at the coverage rate which is approximately half the coverage rate stated above to the previously coated surface when conditions allow for continuing.

   NOTE: When Aqua Base 120 is specified refer to **Spec Supplement G-09-21 "Aqua Base 120 Bonding Adhesive"** for application methods and warranty requirements.

6. **Allow** adhesive to flash-off until it does not string but remains tacky to a dry finger touch.

   CAUTION: Care must be exercised to ensure proper drying. Avoid thin areas of adhesive because over drying

can occur and proper adhesion may not be achieved.

7. **Roll** the coated membrane into the coated substrate while avoiding wrinkles.

8. **Brush** down the bonded section of the membrane sheet immediately after rolling the membrane into the adhesive with a soft bristle push broom to achieve maximum contact.

9. **HydroBond Adhesive** can be applied directly to the substrate using an airless spray machine or a medium nap roller. Do not apply HydroBond to splice areas to be hot-air welded. When applying HydroBond, ensure that the adhesive has not dried before the membrane is laid in place. This is a wet lay-in adhesive; drying occurs rapidly during high temperatures, and care must be taken to ensure the membrane is laid into wet adhesive. To ensure a wet lay-in, adjust the application technique according to weather conditions. Avoid heavy or thin application of adhesive. Roll the membrane into the wet, adhesive coated substrate while avoiding wrinkles. Immediately brush down the bonded portion of the membrane with a soft-bristle push broom or a clean, dry roller applicator to achieve maximum contact and to work out any air bubbles. Immediately after brooming out from the center, roll the membrane in all directions with a minimum 100–150-lb (45–68 kg) weighted roller to achieve maximum contact.

   NOTE: When using Hydrobond Adhesive, do not apply when the surface and/or ambient temperatures are below 40 degrees or when the temperature is expected to drop below 32 degrees within 72 hours of application. Hydrobond Adhesive is a wet lay-in, one-sided adhesive with coverage rate is 100-133 square feet per gallon finished surface.

10. **Fold** back the unbonded half of the sheet and repeat the bonding procedures. **Apply** Bonding Adhesive to the remaining exposed underside of membrane and adjacent substrate and complete this section as described above.

11. **Install** adjoining membrane sheets in the same manner, overlapping edges a minimum of 2 inches to provide for a minimum 1-1/2 inch heat weld. It is recommended that all splices be shingled to avoid bucking of water.

    CAUTION: If aesthetics are of concern, protect completed sections of the roof so Bonding Adhesive will not discolor the membrane surface. Do not place Bonding Adhesive containers or their lids directly on the surface of the VersiFlex membrane.

D. **Membrane Securement / Fastening - Mechanically Attached Roofing Systems**

1. Thermoplastic membranes shall be mechanically attached to the structural deck with specified Versico Fasteners and designated Plates, for fastening densities and numbers of perimeter sheets refer to Warranty Tables, Paragraph 1.05.

2. Membrane Fastening Selection Table:

Membrane Fastener Selection

Deck Type	Versico Fasteners*	Versico Plate	Min. Penetration
Steel or Lightweight Insulating Concrete over Steel**	HPVX	HPVX Plates	3/4"
	HPV-XL	HPV-XL Plates	
Structural Concrete, rated 3,000 psi or greater	CD-10	HPVX Plates	1"
	MP 14-10	HPVX Plates	
Wood Plank, min. 15/32" thick Plywood or min. 7/16" OSB**	HPVX	HPVX Plates	Min. 1"
	HPV-XL	HPV-XL Plates	
Cementitious Wood Fiber	Polymer Gyptec	Gyptec Plates – 2” Dia.	1-1/2"
Gypsum	Polymer Gyptec	Gyptec Plates – 2” Dia.	1-1/2"

Refer to Warranty Tables in Paragraph 1.05 for fastening densities and number of perimeter sheets.
*Determine proper fastener length for deck penetration, refer to Table 2.05B.
**For mechanically attached PVC and KEE HP assemblies, 2-3/4” x 1-1/2” oval metal barbed fastening plates can used in conjunction with HPVX fasteners for membrane securement. (Not recommended for insulation Securement)

3. On steel decks, membrane shall be positioned with seams perpendicular to the steel deck flutes. This allows the external forces on the roof assembly to be distributed between multiple steel deck panels. Refer to **Design Reference DR-06-19 “Withdrawal Resistance Criteria”** in the Versico Technical Manual.

4. Perimeter Sheets

   The number of perimeter sheets and fastener spacing is dependent on the building height, wind zone location

and warranty duration as outlined in Warranty Tables in Paragraph 1.05.

The roof perimeter is defined as all edges of each roof section (i.e., parapets, building expansion joints at adjoining walls, penthouse walls, etc.). When multi-level roofs meet at a common wall, the adjacent edge of the upper roof is treated as a roof perimeter if the difference in height is greater than 10'. Perimeter sheets are not required at the base of the wall at the lower level.

NOTE: Expansion joints, control joints and fire walls in the field of the roof or roof ridges with slopes less than 3" to the horizontal foot are not considered as part of the roof perimeter.

For VersiFlex membranes, perimeter sheets can be formed by using individual 40.5” or 5’-0” wide sheets.

a) **Individual perimeter sheets** (PVC - 40.5” or 5’ wide)(KEE HP PVC – 5’ wide)

Position membrane along the perimeter of the roof over the acceptable insulation/underlayment. The perimeter membrane width from line of securement to line of securement should be approximately 3’-6” to 4’-0” wide.

b) **Fastening Plates Method**

In lieu of the RUSS securement method, position a row of seam fastening plates in the locations identified in Paragraph 4.b.1 and 4.b.2, secure plates with appropriate fastener and overlay plates either 6” wide Pressure-Sensitive TPO Cover Strip (TPO Only) overlay the plates as follows:

1) Projects with Warranties greater than 20 Years OR VersiFlex projects regardless of warranty duration center 6” wide section of PVC/KEE HP PVC membrane (equal thickness to the deck membrane) over the plates and heat weld the field sheets. All cut edges of TPO overlay must be sealed with TPO Cut-Edge Sealant to seal any exposed scrim, cut edge sealant is not required for PVC or KEE HP.

NOTE: Perimeter sheets can also be formed by positioning RhinoBond plates placed along the center of a field membrane (if heat induction welder is available on job-site). Refer to “Attachment I” for additional information.

c) **Building with Special Conditions:**

Air pressurized buildings, canopies and buildings with large openings where the total wall openings exceed 10% of the total wall area on which the openings are located (such as airport hangars, warehouses and large maintenance facilities) will typically require additional perimeter membrane securement, an increased fastening density or other enhancement.

d) **Buildings with large openings**

When any wall contains major openings with a combined area which exceeds 10% of the total wall area on which the openings are located, four (4) perimeter sheets (centered over the opening) must be specified as shown.

As an option to the above perimeter securement, a fully adhered membrane section may be used in lieu of the mechanically attached membrane at large openings in accordance with the Versico Specification for the VersiFlex Fully Adhered Roofing System.

NOTE: Depth of perimeter area, noted above, shall not be less than 2.5 times the width of the opening.

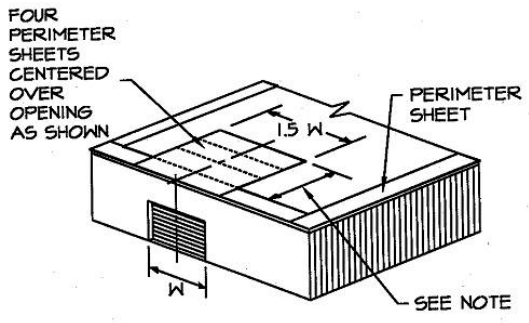

e) **Buildings with overhangs**

The membrane must be specified with perimeter sheets installed over the entire overhang area extending onto the main roof deck when at the same level.

As an option, a fully adhered membrane section may be used in lieu of the mechanically attached membrane at building overhangs in accordance with the Versico Specification for the VersiFlex Fully Adhered Roofing System.

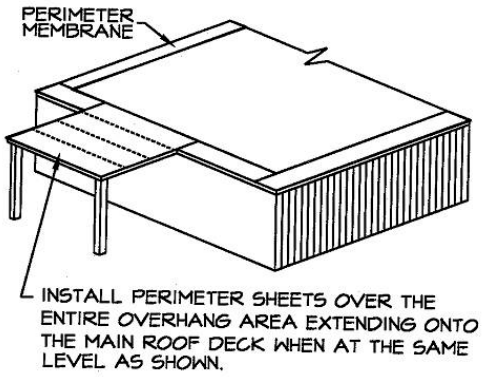

5. **Field Membrane**

a) **Position** adjoining field membrane sheets to allow an approximate overlap of 5-1/2" at those locations where Fastening Plates are located (along the length of the membrane); at the same time overlap end roll sections (the width of the membrane) a minimum of 2".

b) **Secure the membrane** at the approved fastening density with the required Versico Fastener and Fastening Plates.

c) For installation of membrane with fullness, tighten the sheet between fasteners as follows:

1) Unroll sheets and position.

2) Place a fastener and plate in one end of the sheet on the appropriate fastener mark. Go to the opposite end of the sheet, pull it tight and place a fastener and plate at the appropriate mark. Place the remaining fasteners into the sheet.

3) Proceed to weld the sheet in place and continue across the roof.

6. **Prevention of membrane distortion during windy conditions:**

a) Unroll sheet approximately 5' and position edge of membrane with overlap line on adjacent sheet.

b) Install fasteners along the 5' exposed edge.

c) While the 5' of exposed membrane is being fastened, begin welding the overlapped edge using the Automatic Heat Welder.

d) As sheet is being welded and fastened concurrently, unroll membrane. Unroll only enough membrane to stay a few feet ahead of welding and fastening process. This reduces amount of unsecured membrane to be distorted by wind.

e) Continue this process for each adjoining sheet.

E. **Additional Membrane Securement**

1. Securement must be provided at the perimeter of each roof level, roof section, expansion joint, curb, skylight, interior wall, penthouse, etc., at any inside angle change where slope exceeds 2 inches to one horizontal foot, and at all penetrations as identified on the Versico details.

2. Securement may be achieved as follows:

a) On Mechanically Attached Roofing Systems, Versico's HPVX Fastening Plates are used to secure the membrane with the appropriate Versico Fastener at the base of walls and penetrations and flashed as shown on the applicable Versico detail (excluding OSB, cementitious wood fiber and gypsum decks where the required Versico Fastener is installed with the associated 2" diameter plate). On **Fully Adhered Roofing Systems**, Versico standard 2" diameter Seam Fastening Plates may be used in lieu of HPVX

Plates.

b) Securement of the membrane shall be a maximum of 12 inches on center. Starting 6 inches minimum to 9 inches maximum from the inside or outside corner.

c) On Mechanically Attached assemblies, additional membrane securement is required around pipes and sealant pockets as shown on the applicable detail. The plates must be positioned a maximum of 12” away from the penetration, spaced a maximum of 12” on center and flashed in accordance with the applicable Versico Detail.

d) After securing the membrane, flash in accordance with the appropriate detail.

3.06 Heat Welding Procedures

A. **General**

1. APEEL Protective Film should be removed from within areas that are to be heat-welded together. In areas that do not require heat welding, the APEEL Protective Film can be left in place for up to 90 days.

2. Heat weld the VersiFlex membrane sheets using the Automatic Heat Welder or Hot Air Hand Welder and silicone roller.

3. When roof slope exceeds 5" per horizontal foot, use of the Automatic Heat Welding Machine may become more difficult; use of the Handheld Hot Air Welder is recommended.

4. **Check the surfaces** of the membrane to be heat welded to ensure they are properly prepared.

   The surfaces to be heat welded must be clean. Membrane overlaps that become contaminated with field dirt must be cleaned with Weathered or PVC and KEE HP Membrane Cleaner (Weathered Membrane Cleaner should not be used to clean VersiFlex PVC). Weathered or PVC and KEE HP Membrane Cleaner should be wiped dry with a clean Splice Wipe prior to welding. No residual dirt or contaminants should be evident.

B. **Automatic and/or Handheld Heat Welder Equipment**

Refer to **Spec Supplement T-01-23 “Heat Welding Equipment”** for:
a) Temperature Settings
b) Equipment Set-up
c) Additional Information

C. **Membrane Welding**

1. Prepare the Automatic Heat Welder and allow it to warm for approximately 5 to 10 minutes to reach operating temperature.

2. Position the Automatic Heat Welder properly prior to seaming with the guide handle pointing in the same direction the machine will move along the seam.

3. Lift the overlapping membrane sheet and insert the blower nozzle of the Automatic Heat Welder between the overlap. Machine will begin moving along the seam immediately.

4. Weight plates provided on Automatic Welders must be utilized.

5. Proceed along the seam ensuring that the small guide wheel in front of the machine aligns with the edge of the top membrane sheet. Guide the machine from the front only.

   CAUTION: Ensure the power cord has plenty of slack to prevent dragging the machine off course (which could result from a tightly stretched cord).

6. At all splice intersections, roll the seam with a silicone roller to ensure a continuous heat welded seam (the membrane should be creased into any membrane step-off with the edge of the silicone roller). A false weld may result due to surface irregularities created by multiple thicknesses of VersiWeld/VersiFlex membrane sheets.

   When using **60-mil or 80-mil** VersiFlex Membrane, a **PVC “T” Joint Cover** must be applied over all “T” joint splice intersections.

7. To remove the Automatic Heat Welder from the finished splice, disengage and pull the nozzle from the seam area, the machine will stop automatically.

8. Mark the end of the heat welded seam with a water-soluble marker for easy identification. A Handheld Welder will be necessary to complete the weld in the area between where the Automatic Heat Welder is stopped and restarted.

9. Perform a test weld, at least, at the start of work each morning and afternoon. Test welds should be made if any changes in substrate or weather conditions occur.

10. All membranes, at end laps, a minimum 6" wide, reinforced coverstrip must be used in conjunction with applicable primer.

D. **Preventing Membrane Creeping During Welding**

1. The operator of automatic welding equipment must apply foot pressure to the membrane, keeping the membrane tight under the welder. Refer to **Spec Supplement T-01-23 "Heat Welding Equipment"** for additional information.

E. **Test Cuts**

1. Perform a test weld at least at the start of work each morning and afternoon. Refer to **Spec Supplement T-01-23 "Heat Welding Equipment"** for additional information.

F. **Seam Probing**

1. A cotter pin puller (blunt or dull for PVC or KEE HP Membranes) is recommended to probe all heat-welded seams. Probing seams must be done once heat welds have thoroughly cooled. Refer to **Spec Supplement T-01-18 "Heat Welding Equipment"** for additional information.

G. **Cut-Edge Sealant**

1. Cut-Edge Sealant is not required on cut edges of VersiFlex membrane (Horizontal or Vertical).

3.07 Welding Problems / Repairs

A. A Handheld Hot Air Welder and a 2" wide silicone roller must be used when repairing the VersiFlex membrane. When the **entire** heat welded **seam** is to be **overlaid**, an **Automatic Heat Welder** may be used.

B. Prior to proceeding with any repair procedure, the area to be repaired must be cleaned with Weathered or PVC and KEE HP Membrane Cleaner (Weathered Membrane Cleaner should not be used to clean VersiFlex PVC or KEE HP Membrane). The membrane can typically be repaired with standard cleaning methods. In cases where the standard cleaning method is not sufficient, the following procedures must be used.

1. Scrub the area to be welded with a "Scotch Brite" Pad and Weathered or PVC and KEE HP Membrane Cleaner.

2. Clean all residue from the area to be welded with a Splice Wipe or a clean natural fiber (cotton) rag.

3. Weld the new membrane to the cleaned area using standard welding procedures.

C. Voids in welded seams can be repaired using a Handheld Hot Air Welder and a silicone roller. Depending on conditions, a splice overlay may be required.

D. Position the handheld welder facing into void so hot air is forced between overlapping membranes. Roll the top membrane surface using positive pressure toward the outer edge until the heated membrane surfaces are fused.

E. Exposed scrim-reinforcement (resulting from scorching surface of membrane) and test weld areas must be repaired by overlaying the damaged area with a separate piece of VersiFlex reinforced membrane with rounded corners. The overlay must extend a minimum of 2 inches past the area to be repaired.

F. **Probe** all edges of the overlay once cooled to ensure a proper weld has been achieved.

G. Cut-Edge Sealant is not required on cut edges of VersiFlex Membranes.

Note: The same overlay repair procedures may be used for puncture in the VersiFlex membrane.

3.08 Flashings

A. General Considerations

1. The height of new wall flashing must extend above the anticipated water level or slush line.

2. On 15- or 20-year warranty projects, Versico's Termination Bar, in conjunction with Water Cut-Off Mastic, must be specified under all metal counterflashings and surface mounted reglets.

3. To comply with various warranty options, flashing material must equal the required minimum membrane thickness but shall not be less than 60 mils thick. For projects with 20 year or greater warranties Versico Pre-Fabricated accessories must be used when feasible.

4. All Projects, regardless of Warranty Duration, shall incorporate Versico supplied pre-fabricated accessories to seal pipes, corners, sealant pockets, etc., when feasible. When field fabrication is required, the flashing material shall not be less than 60-mils thick.

5. For wall and curb flashing, the required thickness shall equal the deck membrane thickness.

6. **On Retrofit Projects**

   Bitumen-based roof cement and asphaltic-based flashing material, if allowed to remain in contact with the membrane, will cause severe membrane discoloration and for PVC and KEE HP membranes, promote premature plasticizer migration. Existing wall and curb flashing must be removed or concealed with a new acceptable substrate.

   a) The specifier must examine structural supports for rooftop equipment to determine if reasonable access to the membrane beneath the equipment is provided. Versico should be consulted for clarification when access to the membrane system will be restricted.

   b) When hot pipes or other similar penetrations exceed 140°F (60°C) (PVC/KEE HP), they must be designed to incorporate an insulated metal collar and rain hood designed to maintain a surface temperature less than 140°F (60°C) (PVC/KEE HP).

7. When possible, all reinforced membrane splices are heat welded with the Automatic Heat Welder. The Hand Held Hot Air Welder should be utilized in hard to reach areas, smaller curbs, vertical splices and when using non-reinforced membrane.

   a) The new VersiFlex membrane flashing must not conceal weep holes or cover existing throughwall flashing.

   b) Install surface mounted reglets and compression bar terminations directly to the wall surface.

8. In areas where metal counterflashing or surface mounted reglets are used as vertical terminations, the counterflashing must be sealed with a rubber grade caulking to prevent moisture migration behind the new wall flashing.

B. Application of Bonding Adhesive

1. Membrane shall be fully adhered to vertical surfaces with VersiFlex Bonding Adhesive. CAV-GRIP PVC aerosol adhesive may be utilized with VersiFlex PVC membranes (cannot be used with any KEE or KEE HP bareback membranes). The Bonding Adhesive shall be applied continuously, without globs or puddles.

2. **Allow** adhesive to flash-off until it is tacky but will not string or transfer to a dry finger touch.

3. Roll the membrane into the adhesive.

4. Care must be taken when setting the flashing to avoid bridging greater than 3/4 inch at angle changes (i.e., where a parapet or roof penetration meets the roof deck). This can be accomplished by creasing the membrane into the angle change.

5. Terminate the edges of the installed membrane in accordance with Versico's applicable details.

C. Walls, Parapets, Curbs, Skylights, etc.

The flashing height must be calculated so that the VersiFlex membrane flashing includes a minimum 1-1/2 inch heat

weld beyond the Fastening Plates.

1. Fasten at angle change as identified in **Paragraph 3.05 F**, Additional Membrane Securement, with the required Versico Fastener and plate.

2. Flash the fasteners/plates with a separate piece of VersiFlex reinforced membrane; apply heat and crease the flashing into the angle change before attaching it to the vertical surface.

D. **Metal Edge Terminations**

Factory-fabricated metal edge systems must be secured to the wood nailer as specified by the manufacturer. Shop-fabricated edging must be installed in compliance with appropriate Versico Detail using Versico PVC Coated Metal in order to achieve ES-1 Compliance. Refer to the appropriate Universal Details for other flashing options and requirements.

E. **Roof Drains**

1. VersiFlex membrane may extend into the drain sump when the slope of the sump is less than 3" to one horizontal foot.

   When the drain sump is greater than 3" to one horizontal foot, additional membrane securement must be installed.

2. Only drain strainers that have been approved by the specifier in accordance with applicable codes may be used.

F. **VersiFlex Rib Profiles**

1. VersiFlex Rib Profiles are recommended for use with VersiFleece PVC adhered roofing systems.

2. The VersiFlex Rib Profiles should be positioned parallel to the laps of the installed PVC roofing system and parallel with the roof slope where possible.

3. Ensure that all welding surfaces are clean and dry. Inspect all seam areas for proper weld prior to installing VersiFlex Rib Profile.

4. Rib Profile spacing can be individually determined to achieve the desired appearance.

5. Connecting multiple ribs is achieved by using fiberglass pins. Insert a pin half-way into the end of one profile. Connect the adjoining rib by inserting the exposed end of the pin into the alignment hole. Repeat previous steps for additional PVC Rib profiles.

6. Consult the VersiFlex Rib Profile installation guides for instructions on proper installation techniques.

G. **Other Penetrations**

On Mechanically Attached assemblies, additional membrane securement is required around pipes and sealant pockets as shown on the applicable detail. The plates must be positioned a maximum of 12" away from the penetration, spaced a maximum of 12" on center and flashed in accordance with the applicable Versico Detail.

1. **Pipes, Round Supports, etc.**

   a) Flash pipes with Molded Pipe Flashings or Split Pipe Seals where their installation is possible. Molded pipe flashings cannot be cut and patched; deck flanges cannot be overlapped or installed over angle changes.

   b) Where Molded Pipe Flashings or Split Pipe Seals cannot be installed, APPLY FIELD FABRICATED PIPE FLASHING using VersiFlex non-reinforced membrane.

2. **Flexible Penetrations** (braided cables, conduits, wires, etc.) must be enclosed in a stable “goose neck.” Apply a Split Pipe Seal or field fabricated pipe flashing to flash the goose neck.

3. **Hot pipes** that exceed 140°F (60°C) (PVC/KEE HP), must utilize an insulated metal collar and rain hood, flashed with a field fabricated pipe flashing.

4. For **pipe clusters** or unusually shaped penetrations, a Molded Sealant Pocket and White One-Part Sealant

must be utilized.

5. **Existing Roof Tie-Ins** for PVC or KEE HP PVC membranes require total isolation between the two roofing systems.

6. **Flashing of Difficult Penetrations,** refer to **Spec Supplement G-11-20 for "LIQUISEAL Liquid Flashing"** for additional information and specific requirements.

H. **APEEL Protective Film (Optional)**

When the optional APEEL Protective Film is utilized on PVC/KEE HP, remove and discard the APEEL Protective Film after the installation of the entire PVC/KEE HP Roofing System is complete.

3.09 Roof Walkways

Walkways are to be specified at all traffic concentration points (i.e., roof hatches, access doors, rooftop ladders, etc.), and if regular maintenance (once a month or more) is necessary to service rooftop equipment. **Refer to Spec Supplement G-05-21 "Roof Walkway Installation"**.

3.10 Daily Seal

On phased roofing, when the completion of flashings and terminations is not possible by the end of each workday, provisions must be taken to temporarily close the membrane to prevent water infiltration. **Refer to Spec Supplement G-06-20 "Daily Seal & Clean Up"**.

Copyright 2024 Versico Roofing Systems
Versico, VersiFlex, VersiCore, VersiTrim, DuraFaceR, LIQUISEAL and Flexible DASH are Trademarks of Versico

Insulfoam, InsulLam and R-Tech are Trademarks of Insulfoam
Thermapink, Foamular and Durapink are Trademarks of Owens Corning
DensDeck, DensDeck Prime and DensDeck StormX Prime are Trademarks of Georgia-Pacific Corporation
Securock is a Trademark of USG
Styrofoam is Trademark of the DOW Chemical Company
Olybond is a Trademark of OMG, Inc.

This specification represents the applicable information available at the time of its publication. Owners, specifiers and Versico Authorized Roofing Contractors should consult Versico or their Versico Independent Sales Representative for any information, which has subsequently been made available.

Review the appropriate Versico warranty for specific warranty coverage, terms, conditions and limitations.

SPECIFICATION
ATTACHMENT

Thermoplastic (PVC/KEE HP) Mechanically Fastened Roofing Systems Induction Welding (RhinoBond / Isoweld) Attachment Method

"Attachment I"

January 2024

This is an alternate method for securing the Versico's VersiFlex (PVC/KEE HP) membrane and is intended to be used in conjunction with the Versico's Thermoplastic Mechanically Attached Specification and Details.

A. Description

The Induction Welding (RhinoBond/Isoweld) Attachment Method incorporates 3" diameter corrosion-resistant plate with a hot melt PVC coating. The Plates are installed with HPVX Fasteners to secure an acceptable insulation to minimum 22 gauge steel deck or minimum 15/32" thick plywood.

Versico's Polyester Reinforced Thermoplastic membrane is positioned over the secured RhinoBond or Isoweld plates and welded to the surface using the RhinoBond or Isoweld Induction Welding Tool.

Induction Welding (RhinoBond/Isoweld) Attachment Method Limited to 20 year maximum warranty and wind speed coverage up to 90 mph. Perimeter enhancements will be required on systems greater than 72 mph and/or projects over 50' in height. Contact Versico for requirements for enhancements.

Table I **Induction Welded - Membrane Systems Warranty Options**

Years	VersiFlex PVC		
	Warranty Wind Speed 55, 72, 80 or 90 mph	Minimum Membrane Thickness (1)	Additional Puncture Coverage
5,10, or 15 year	√(2)	VersiFlex 50-mil	Not Available
20 year	√(2)	VersiFlex 60-mil	Not Available
25 or 30 year	√(2)	VersiFlex 80-mil	Available

Notes: √= Acceptable

(1) All "T-Joints" must be overlaid with appropriate flashing material when using 60-mil or 80-mil PVC/KEE HP membrane.
(2) Perimeter calculation is .4x height of building. The minimum perimeter width is 8-feet up to a 20-year warranty and 16-feet for 25-30-year warranty.
(3) Perimeter enhancements required for wind speed coverage greater than 72mph and/or projects over 50' in height. Contact Versico for requirements.

Table II

Induction Welded – Induction Plate Density for Induction Welded Roofing Systems (Up to 20 YR Warranty)

Peak Gust Wind Speed Warranty	Max. Building Height	Minimum Perimeter Width	Induction Weld Plate Density		
			Field	Perimeter	Corners
55 MPH	Up to 50'	8’	6	8	8
72 MPH	Up to 50'	8’	6	8	8
80 MPH	Up to 50'	8’	8	10	10
90 MPH	Up to 50'	8’	8	12	12
100 MPH	Up to 50'	8’	8	12	16
110 MPH	Up to 50'	8’	10	16	16
120 MPH	Up to 50'	8’	10	16	20

Table III

Induction Welded – Induction Plate Density for Induction Welded Roofing Systems (Up to 30 YR Warranty)

Peak Gust Wind Speed Warranty	Max. Building Height	Minimum Perimeter Width	Induction Weld Plate Density		
			Field	Perimeter	Corners
55 MPH	Up to 50'	16'	8	10	10
72 MPH	Up to 50'	16'	8	10	10
80 MPH	Up to 50'	16'	10	12	12
90 MPH	Up to 50'	16'	10	12	12
100 MPH	Up to 50'	16'	10	16	20
110 MPH	Up to 50'	16'	12	16	24
120 MPH	Up to 50'	16'	12	16	24

B. Products/Heat Welding Equipment

Products listed in "Part II" of the Versico Thermoplastic Mechanically Fastened Roofing System Specification can be used as part of this alternate securement method in conjunction with the RhinoBond or Isoweld Welding Plates.

1. **RhinoBond or Isoweld PVC Welding Plate:** A 3" diameter, 0.028" thick, corrosion-resistant steel plate with high solids coating on the top surface. The plate is used in conjunction with Versico's HPVX Fasteners to attach the roofing assembly and is activated using the RhinoBond or Isoweld Induction Welding Tool.

2. **RhinoBond or Isoweld Induction Welding Tool:** An induction heating tool is used to emit the magnetic field that activates the hot melt coating on the top surface of the RhinoBond or Isoweld Welding Plate to fuse with the roofing membrane. Refer to RhinoBond or Isoweld Owner's Manual for additional information.

3. **Magnet:** A stand-up device that allows the weld to cool as it holds the membrane to the heated plate. Refer to RhinoBond or Isoweld Owner's Manual for additional information.

C. RhinoBond Induction Tool Calibration

Prior to proceeding with membrane attachment to the plate, the RhinoBond Induction Welding Tool must be calibrated with samples of the project specified insulation thickness and type and project specified membrane thickness. Refer to RhinoBond Owner's Manual for additional information.

1. Loose lay five RhinoBond Plates in a row about 12-24" apart or the specified membrane substrate.

2. Place membrane over the RhinoBond Plates.

3. Centering over the RhinoBond Plate under the membrane, place the Induction Welding Tool and use the device's default setting. Weld the membrane to the first plate, and when ready, completely remove Welding Tool. Immediately place the Magnet on the membrane over the plate and leave in place for 60 seconds.

4. Place Induction Welding Tool on the next plate as previously done and increasing the induction energy one level by depressing the "up" button once. After welding, immediately place the Magnet.

5. Repeat above procedure for the remainder of the plates, increasing induction energy one level for each plate.

6. After allowing the membrane and plates to cool to ambient temperatures, remove Cooling Clamp and use a pair of pliers and apply force to peel RhinoBond Plate from underside of membrane to determine bonding strength. Desired result is welded ply membrane stays fused to RhinoBond Plate.

7. Repeat trial process, if needed, adjusting energy level up or down until desired results are achieved.

   NOTE: Recalibrating induction tool settings is necessary when ambient temperature changes more than +/- 15°F or power to device have been interrupted.

D. Isoweld Induction Tool Calibration

Calibrate the Isoweld induction welding tool using the process outlined in the Owner's Manual.

E. Installation

Caution: To avoid false welds and ensure adequate membrane attachment to the plates, induction tool calibration and test welds (along with the proper positioning of the induction welder over the plate and placement of the magnet) must be performed prior to the start of work each day. All test welds must be completed using the exact components of the assembly to be installed.

1. After placement of insulation on substrate, secure the insulation at a rate of six HPVX Fasteners and RhinoBond or Isoweld Plates per 4' x 8' in the designated field and eight HPVX Fasteners and RhinoBond or Isoweld Plates around the perimeter. Refer to appropriate Versico details for patterns and depth of perimeter area.

   NOTE: Avoiding fastener overdrive to prevent plate from deforming.

2. Place VersiFlex membrane over the appropriate RhinoBond or Isoweld Plates and allow membrane to relax.

3. Place RhinoBond Induction Tool centered over the RhinoBond PVC Welding Plate, under the roofing membrane OR Place the Isoweld Induction Tool over the Isoweld PVC Welding Plate, until the acoustic search mode signals the inductor is properly positioned.

4. Activate induction welding tool and leave in place until heating cycle is complete.

5. Immediately place Magnet on the membrane over the plate and leave in place for at least 60 seconds.

6. Resume process ensuring membrane is attached to all plates.

F. Membrane Hot Air Welding Procedures & Additional Securement

1. Adjoin membrane sheets by overlapping and heat welding the seam following standard Hot Air Welding Procedures as outlined in the "Part III" of the Thermoplastics Mechanically Attached Roofing System Specification.

2. Base wall securement and securement around roof penetrations as well as flashings of walls and penetrations must comply with Versico requirements for the Thermoplastics Mechanically Attached Roofing System.

G. Associated Installation Details

RhinoBond Attachment Method – Number of Fasteners and Location…… RB-1
Angle Change Securement Method RhinoBond Plates…… RB-2
Induction Welded Wall Attachment ……RB-3
Isoweld Attachment Method – Number of Fasteners and Location……IW-1
Angle Change Securement Method with Isoweld Plates……IW-2
Induction Welded Wall Attachment…… IW-3
Induction Welding Attachment Method – Fastening Patterns/Enhancements ……FP-1
Induction Welding Attachment Method – Fastening Patterns/Enhancements ……FP-2

End of Section

NOTES:

1. RhinoBond METHOD OF MEMBRANE ATTACHMENT IS NOT FOR USE WITH NON-FACED EPS (EXPANDED POLYSTYRENE) OR XPS (EXTRUDED POLYSTYRENE) INSULATIONS.
2. PERIMETER ENHANCEMENTS REQUIRED FOR WIND SPEED COVERAGE GREATER THAN 72MPH. CONTACT VERSICO FOR REQUIREMENTS.
3. ENHANCEMENT SHOWN ARE FOR THE PURPOSE OF THE VERSICO WARRANTY. FOR FM PROJECTS CONSULT FM GLOBAL FOR REQUIRED ENHANCEMENTS.

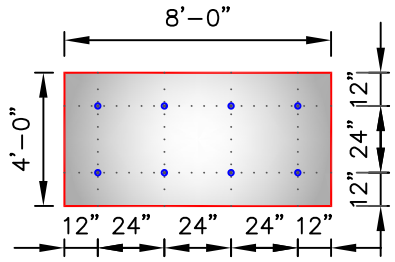

(A) PERIMETER ZONE
8 FASTENERS PER 4'X8' BOARD

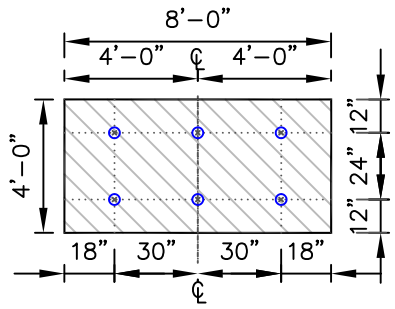

(B) FIELD OF ROOF
6 FASTENERS PER 4'X8' BOARD

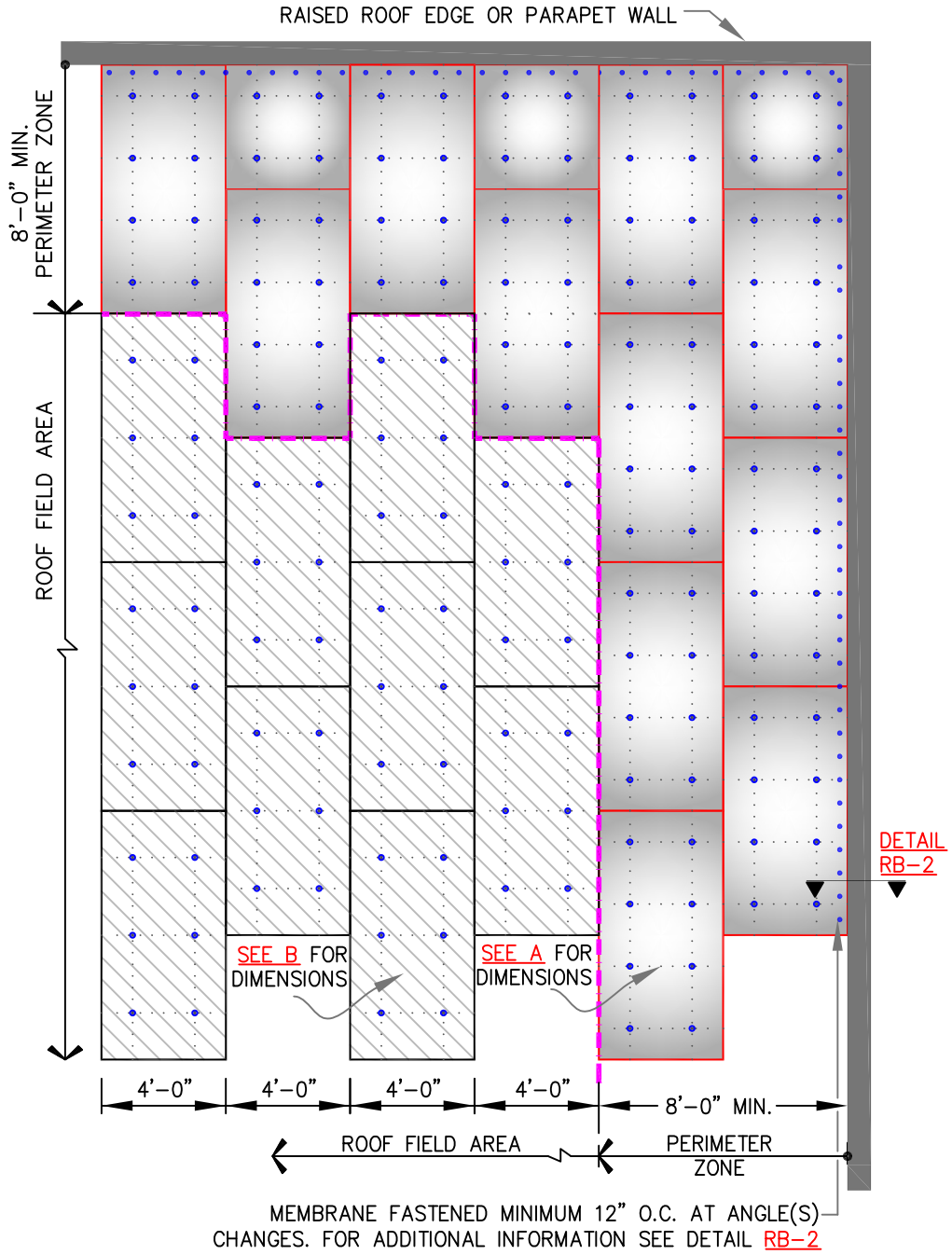

PERIMETER AREA

FIELD AREA

VERSICO FASTENER & RhinoBond FASTENER PLATE

DECK TYPE	DECK THICKNESS	FASTENER	THERMOPLASTIC COATED PLATE
STEEL	22 GAUGE (0.8mm)	VERSICO HPVX FASTENER	3-1/8" (8cm) DIAMETER
PLYWOOD	15/32" (12mm)		
NOTE: AT IN-FILL MINOR PIECES, USE MIN. 2 FASTENERS.			

INCHES TO CENTIMETERS							
inch	2"	3.5"	4"	12"	18"	24"	30"
cm	5	9	10	30	46	61	76

FEET TO CENTIMETERS			
FEET	1'	4'	8'
cm	30	122	244

VERSICO ROOFING SYSTEMS
©2024 VERSICO

RhinoBond ATTACHMENT METHOD-NUMBER OF FASTENERS AND LOCATION

VERSICO RhinoBond

RB-1

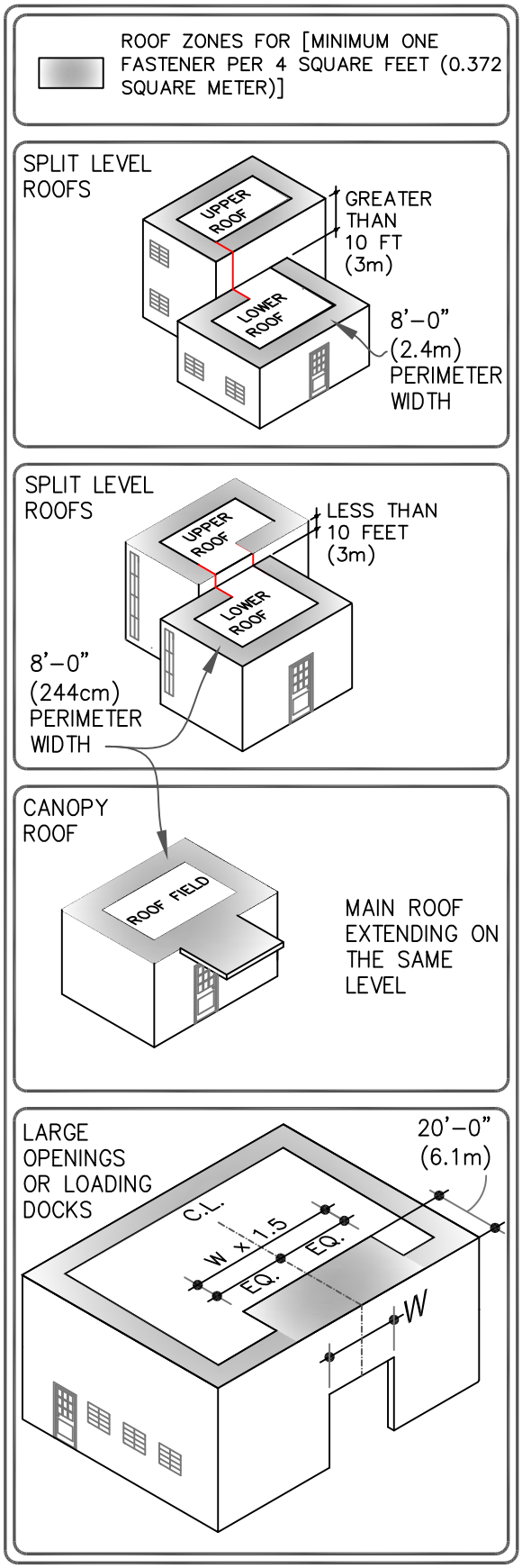

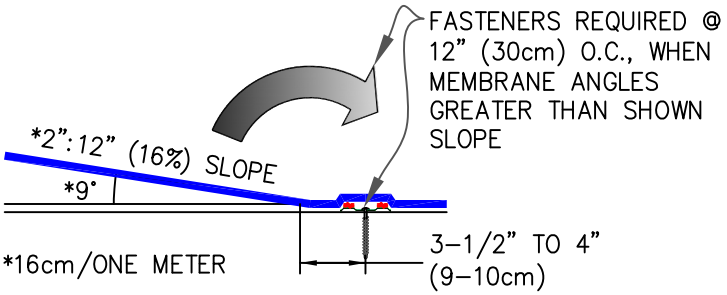

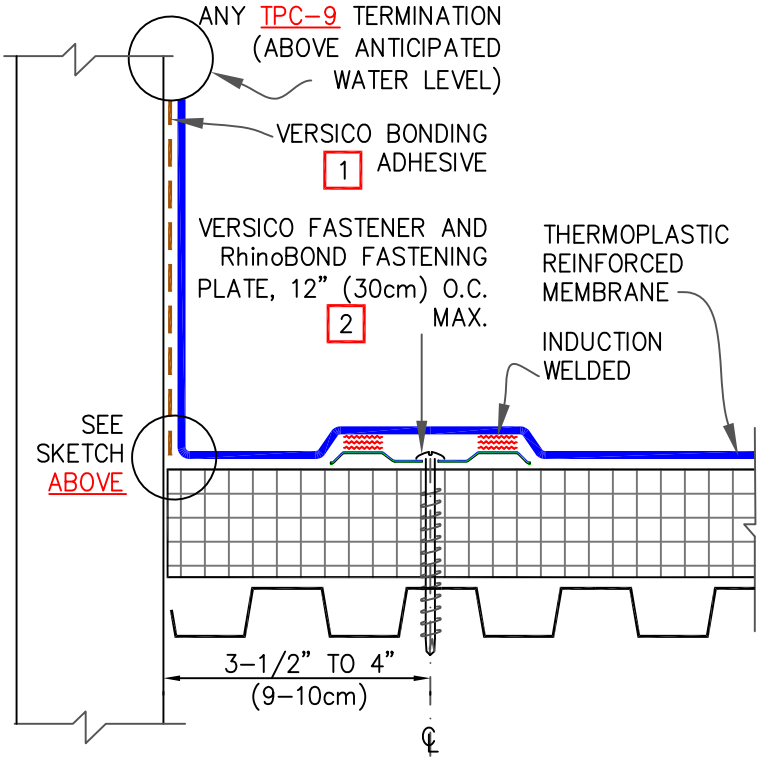

ANGLE CHANGE SECUREMENT

NOTES:

1. VersiWELD MEMBRANE REQUIRES VersiWELD BONDING ADHESIVE AND VersiFLEX MEMBRANE REQUIRES VersiFLEX BONDING ADHESIVE.

2. HPVX FASTENERS AND RhinoBOND PLATES ARE REQUIRED OVER STEEL AND WOOD DECKS. FOR WARRANTY WIND SPEEDS GREATER THAN 72 MPH PLEASE CONTACT VERSICO FOR REQUIRED FASTENING ENHANCEMENTS

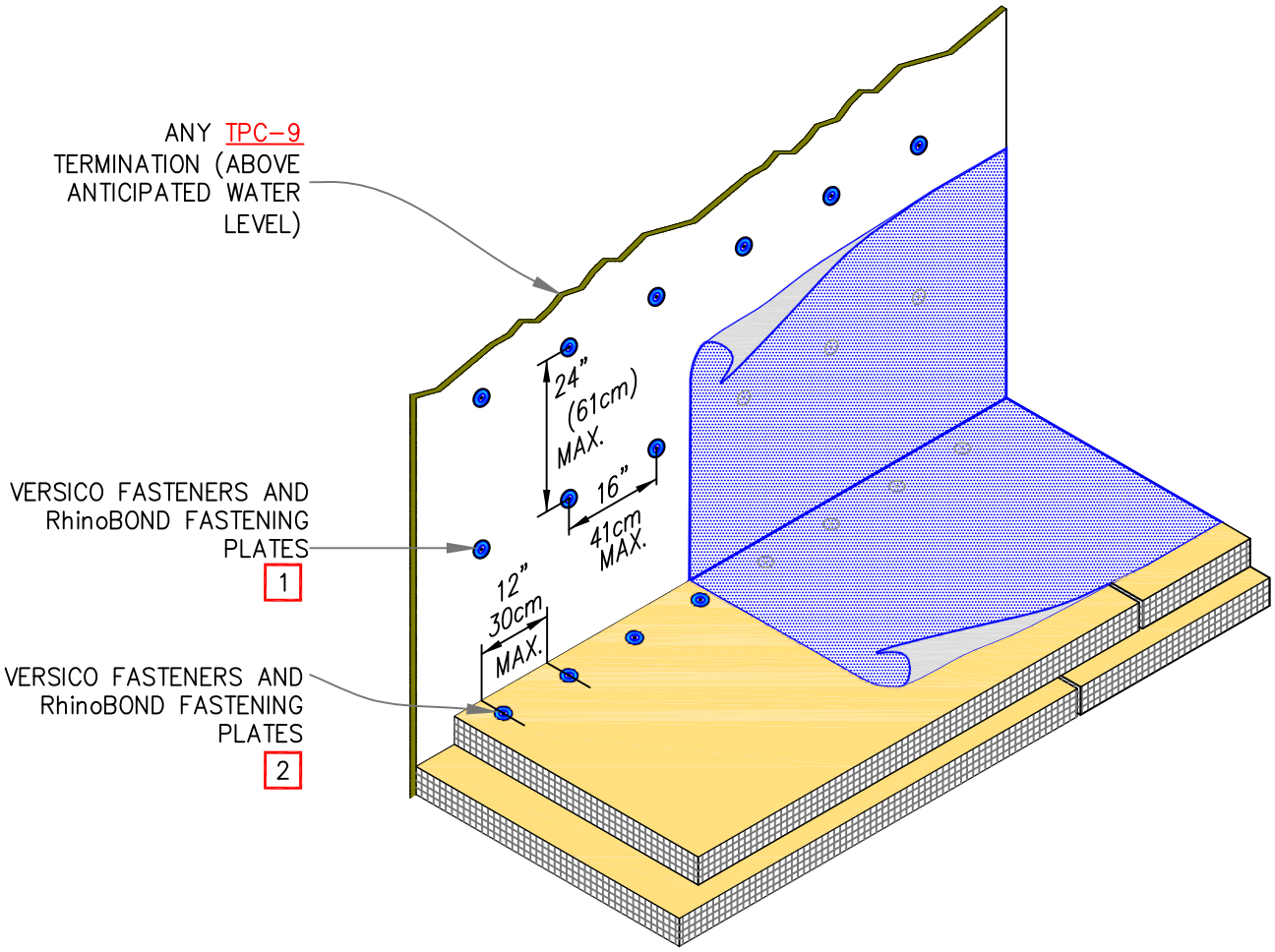

NOTES:

1. FASTENERS MUST PENETRATE INTO WOOD OR METAL STUDS, WHERE WALL IS BUILT WITH STUDS.

2. HPVX FASTENERS AND RhinoBOND PLATES ARE REQUIRED OVER STEEL AND WOOD DECKS.

NOTES:

1. Isowled METHOD OF MEMBRANE ATTACHMENT IS NOT FOR USE WITH NON-FACED EPS (EXPANDED POLYSTYRENE) OR XPS (EXTRUDED POLYSTYRENE) INSULATIONS.

2. PERIMETER ENHANCEMENTS REQUIRED FOR WIND SPEED COVERAGE GREATER THAN 72MPH. CONTACT VERSICO FOR REQUIREMENTS.

3. ENHANCEMENT SHOWN ARE FOR THE PURPOSE OF THE VERSICO WARRANTY. FOR FM PROJECTS CONSULT FM GLOBAL FOR REQUIRED ENHANCEMENTS.

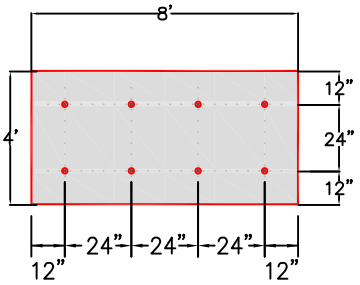

(A) PERIMETER ZONE
8 FASTENERS PER 4'X8' BOARD

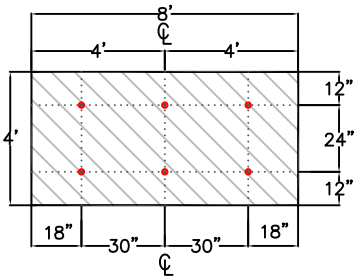

(B) FIELD OF ROOF
6 FASTENERS PER 4'X8' BOARD

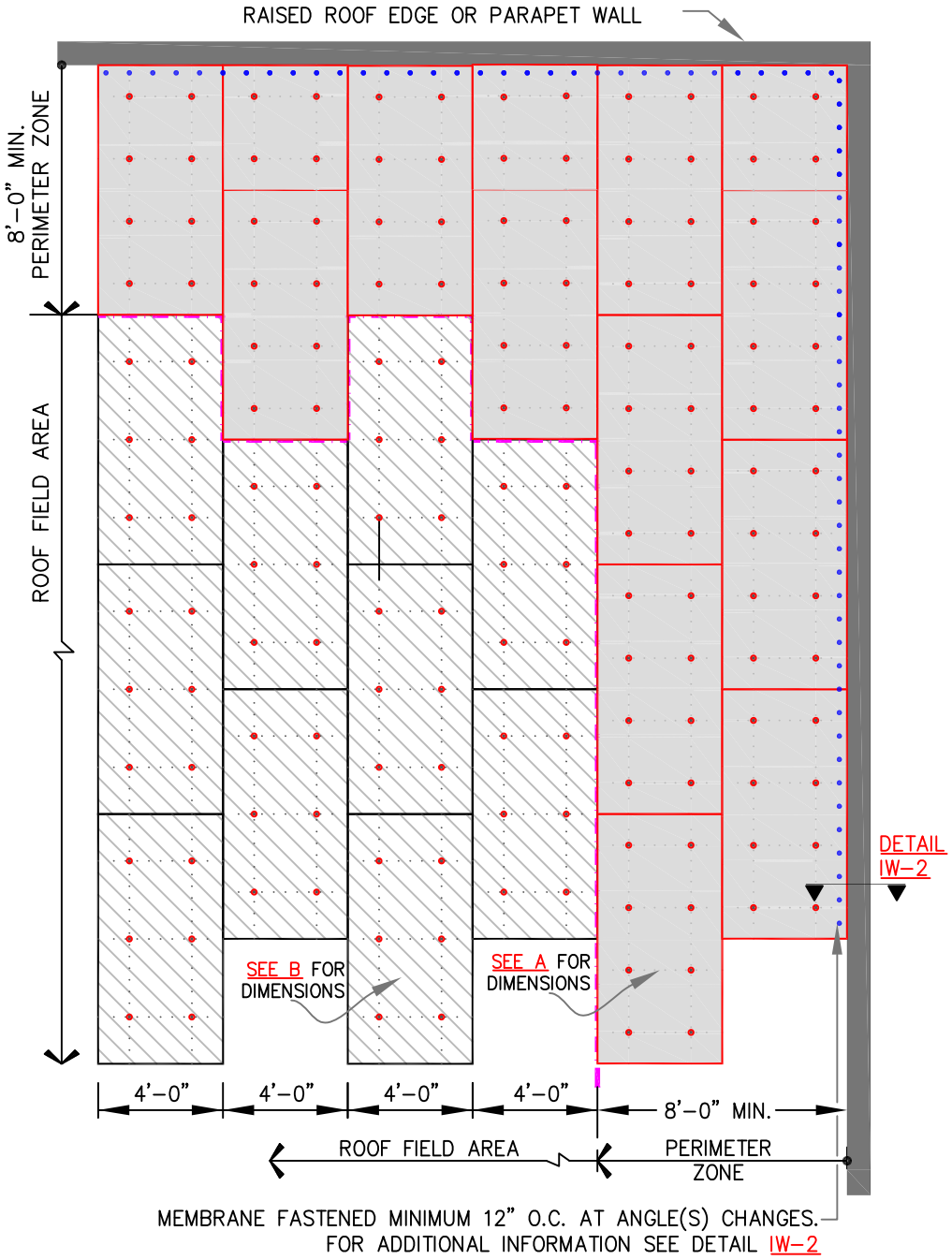

PERIMETER AREA

FIELD AREA

VERSICO FASTENER & Isoweld FASTENER PLATE

DECK TYPE	DECK THICKNESS	FASTENER	THERMOPLASTIC COATED PLATE
STEEL	22 GAUGE (0.8mm)	VERSICO HPVX FASTENER	3-1/8" (8cm) DIAMETER
PLYWOOD	15/32" (12mm)		
NOTE: AT IN-FILL MINOR PIECES, USE MIN. 2 FASTENERS.			

INCHES TO CENTIMETERS							
inch	2"	3.5"	4"	12"	18"	24"	30"
cm	5	9	10	30	46	61	76

FEET TO CENTIMETERS			
FEET	1'	4'	8'
cm	30	122	244

VERSICO ROOFING SYSTEMS
©2024 VERSICO

ISOWELD ATTACHMENT METHOD – NUMBER OF FASTENERS AND LOCATIONS

VERSICO Isoweld Attachment

IW – 1

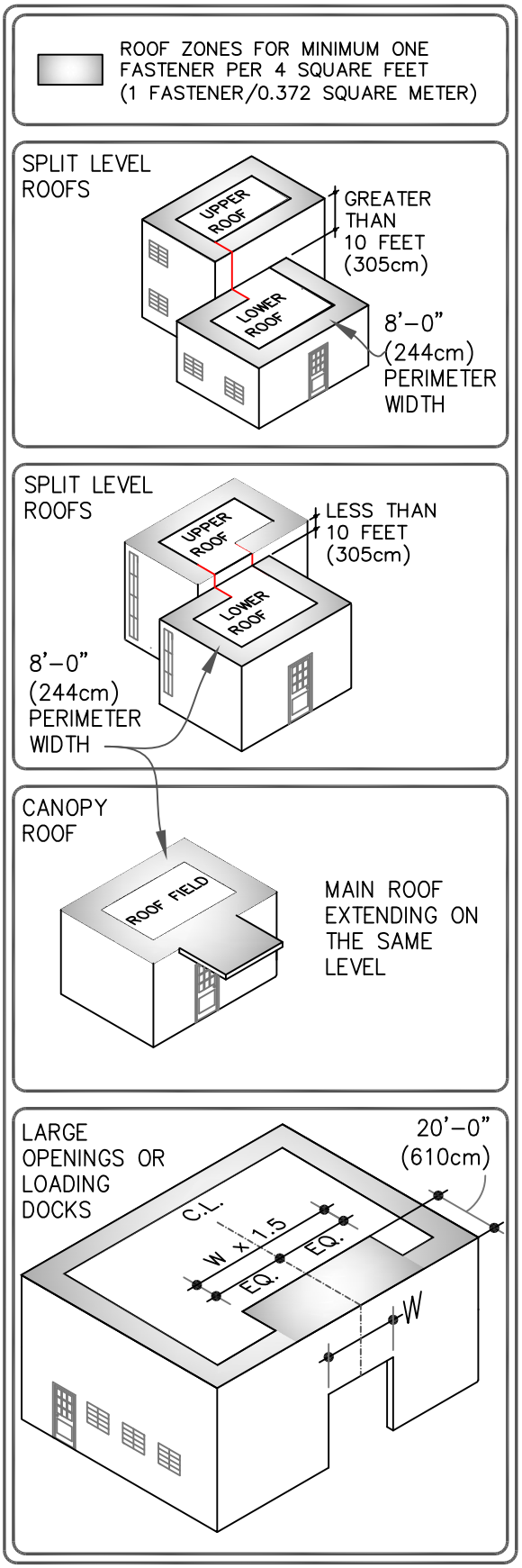

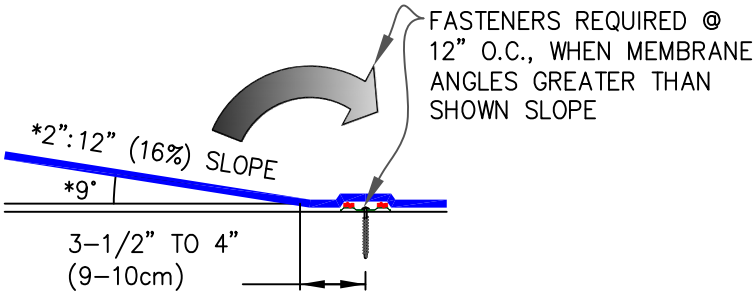

*100mm HORIZONTAL:16mm VERTICAL

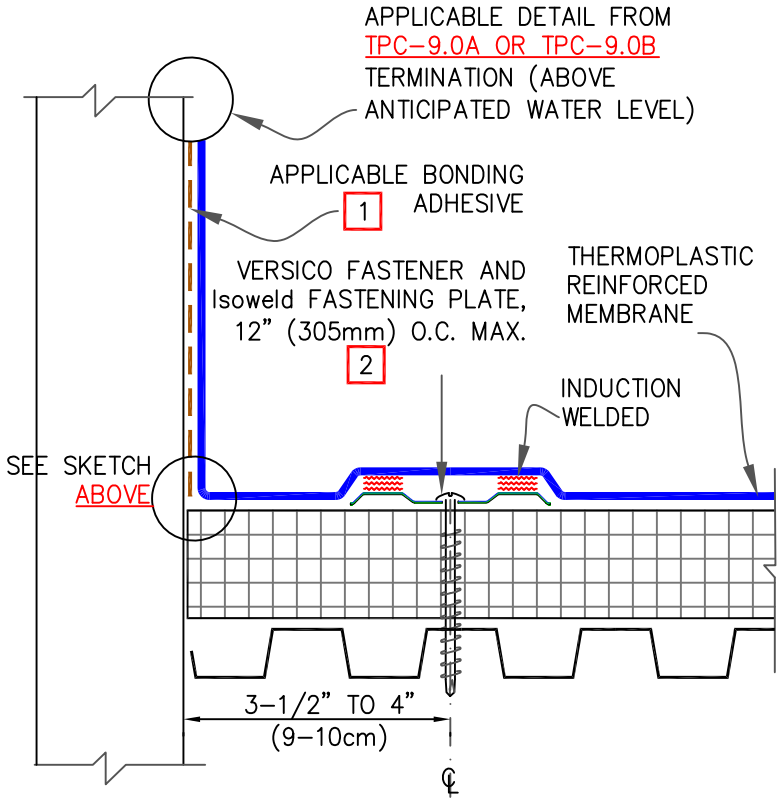

ANGLE CHANGE SECUREMENT

NOTES:

1. VersiWELD MEMBRANE REQUIRES VersiWELD BONDING ADHESIVE AND VersiFLEX MEMBRANE REQUIRES VersiFLEX BONDING ADHESIVE.

2. HPVX FASTENERS AND Isoweld PLATES ARE REQUIRED OVER STEEL AND WOOD DECKS. FOR WARRANTY WIND SPEEDS GREATER THAN 72 MPH PLEASE CONTACT VERSICO FOR REQUIRED FASTENING ENHANCEMENTS.

©2024 VERSICO

ANGLE CHANGE SECUREMENT METHOD WITH ISOWELD PLATES

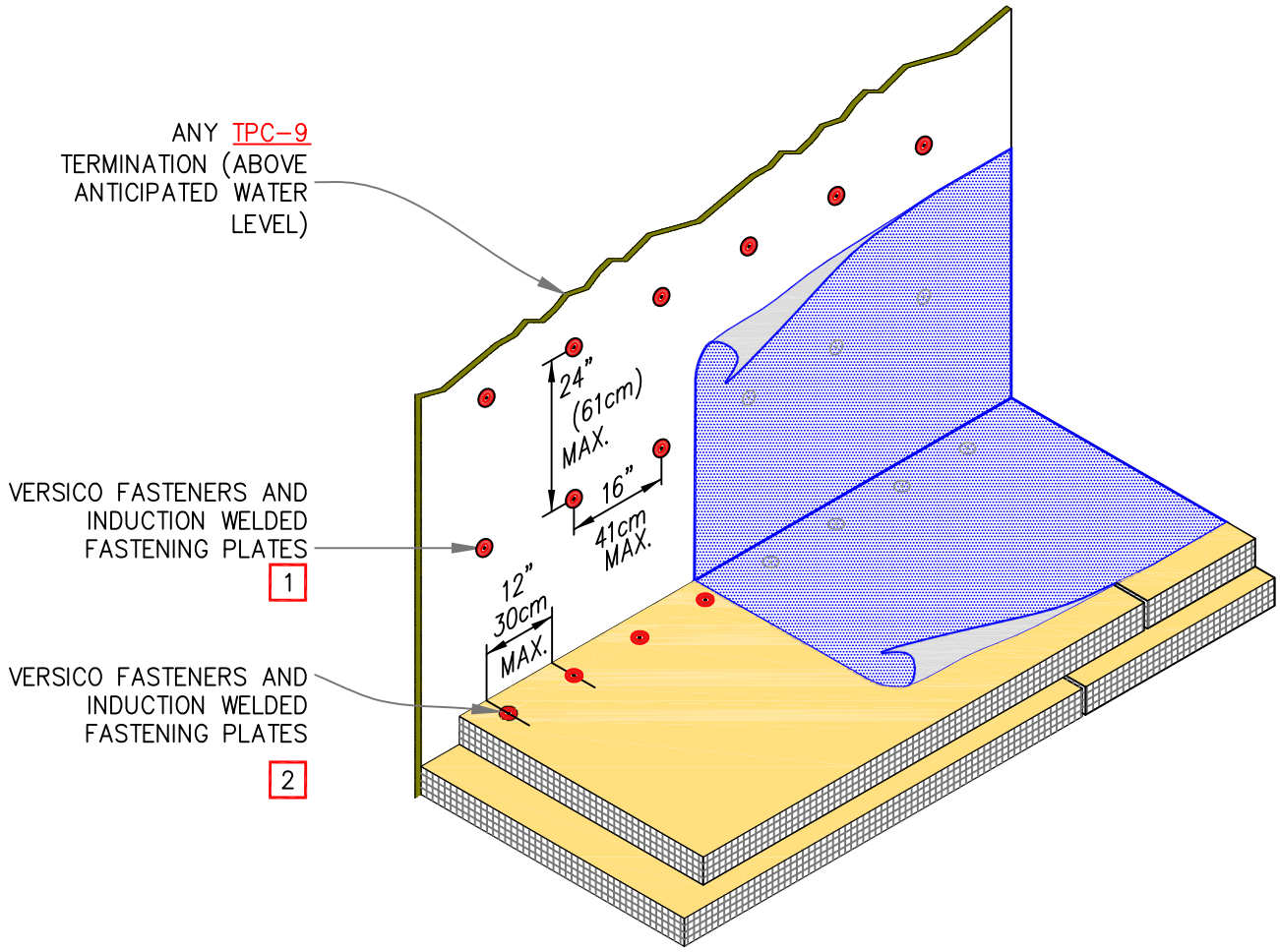

NOTES:

1. FASTENERS MUST PENETRATE INTO WOOD OR METAL STUDS, WHERE WALL IS BUILT WITH STUDS.

2. HPVX FASTENERS ARE REQUIRED OVER STEEL AND WOOD DECKS.

©2024 VERSICO

ISOWELD – WALL ATTACHMENT

VERSICO Isoweld Attachment

IW – 3

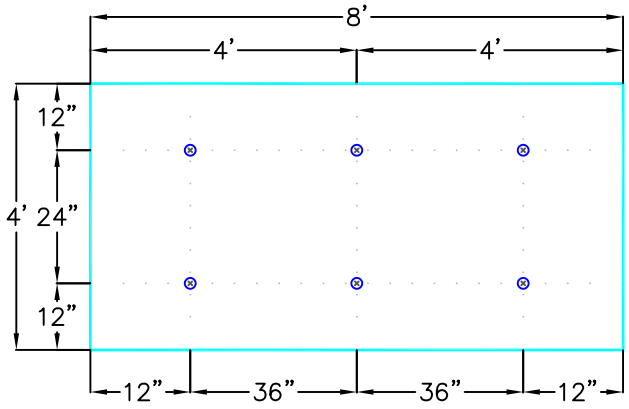

6 FASTENERS PER 4'X8' BOARD

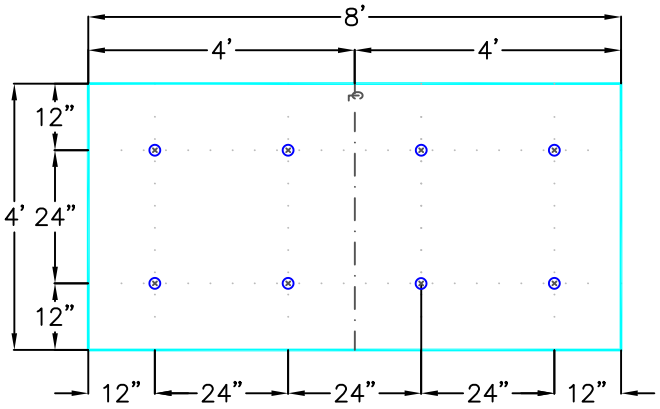

8 FASTENERS PER 4'X8' BOARD

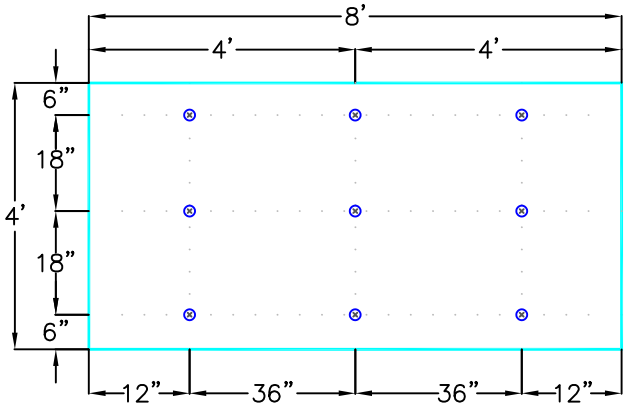

9 FASTENERS PER 4'X8' BOARD

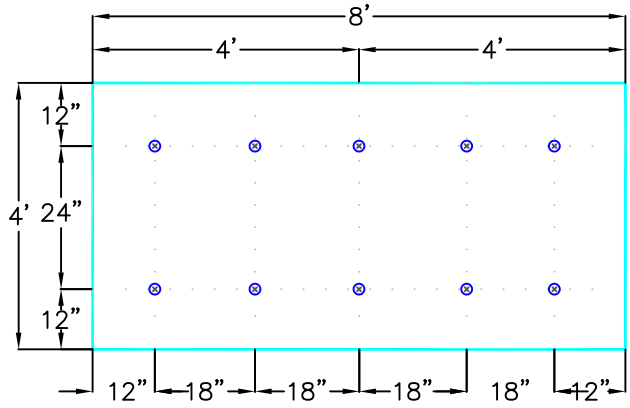

10 FASTENERS PER 4'X8' BOARD

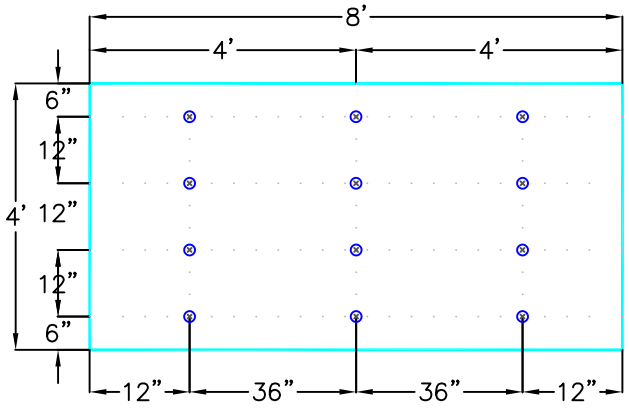

12 FASTENERS PER 4'X8' BOARD

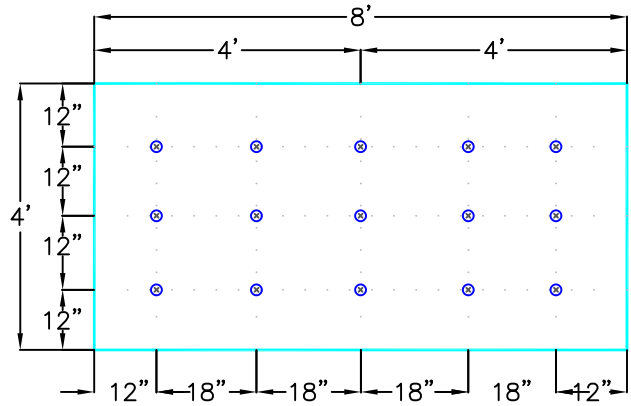

15 FASTENERS PER 4'X8' BOARD

NOTE: FOR FM INSURED PROJECTS, CONSULT FM GLOBAL PRIOR TO INSTALLATION.

VERSICO ROOFING SYSTEMS

©2024 VERSICO

INDUCTION WELDING ATTACHMENT METHOD – FASTENING PATTERNS/ENHANCEMENTS

Induction Welding

FP – 1

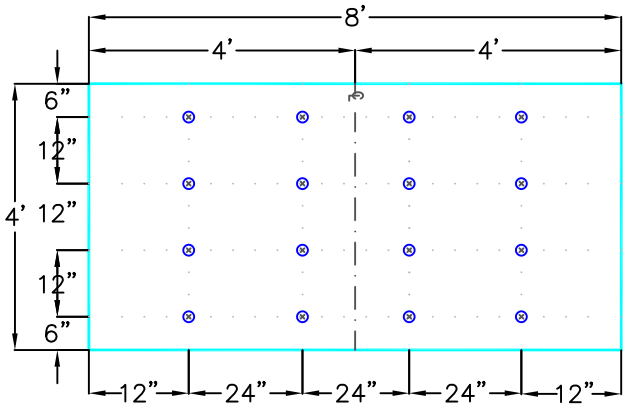

16 FASTENERS PER 4'X8' BOARD

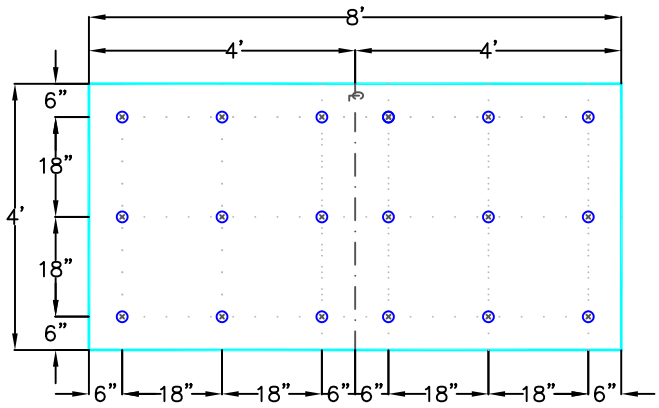

18 FASTENERS PER 4'X8' BOARD

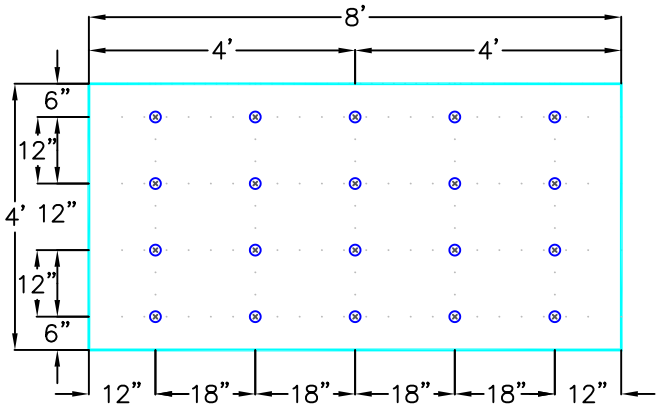

20 FASTENERS PER 4'X8' BOARD

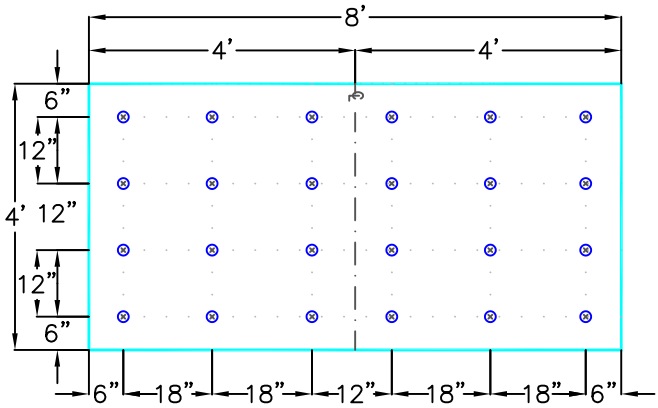

24 FASTENERS PER 4'X8' BOARD

NOTE: FOR FM INSURED PROJECTS, CONSULT FM GLOBAL PRIOR TO INSTALLATION.

VERSICO ROOFING SYSTEMS

©2024 VERSICO

INDUCTION WELDING ATTACHMENT METHOD – FASTENING PATTERNS/ENHANCEMENTS

Induction Welding

FP – 2

VersiFlex™ PVC
Mechanically Attached and Fully Adhered Roofing Systems

Installation Details Table of Contents

January 2024

Mechanically Attached — **Detail**
Membrane Securement TPMA-2.0A
Mechanically Attached Membrane Splice, Page 1 of 2 ..... TPMA-2.1
Mechanically Attached Membrane Splice, Page 2 of 2 ..... TPMA-2.1
Ridge Membrane Attachment TPMA-22.0

Metal Edges and Gravel Stops
VersiTrim Heat Weldable Drip Edge Fascia TPC-1.2
Metal Bar Edge Termination TPC-1.3
VersiTrim 200 ..... TPC-1.4
VersiTrim 300 ..... TPC-1.5
VersiTrim 2000 & 3000 ..... TPC-1.6
Pressure-Sensitive PVC/KEE HP Cover Strip TPC-1.7

Membrane Splices
PVC/KEE HP Membrane Splice TPC-2.0

Expansion Joints
Deck-to-Deck Roof Expansion Joint TPC-3.1
Deck-to-Deck Curbed Expansion Joint TPC-3.1A
Deck-to-Wall Expansion Joint TPC-3.2

Curb Flashing
Curb Flashing With PVC Membrane TPC-5.1
Coated Flashing With PVC Coated Metal TPC-5.2
Curb Flashing With CFA PVC Curb Wrap Corners TPC-5.3
Self-Flashing Curb With CFA PVC Curb Wrap Corners TPC-5.4

Drains
Roof Drain: Sump Slope Less than 3 inches to One Horizontal Foot TPC-6.1
Roof Drain: Sump Slope Greater than 3 inches to One Horizontal Foot (Option 1) TPC-6.2
Roof Drain: Sump Slope Greater than 3 inches to One Horizontal Foot (Option 2) Page 1 of 2 ..... TPC-6.3A
Roof Drain: Sump Slope Greater than 3 inches to One Horizontal Foot (Option 2) Page 2 of 2 ..... TPC-6.3B
Add-On Drain TPC-6.4

Pipe Flashing
Pre-Molded Flashing TPC-8.1
Field Fabricated Pipe Flashing TPC-8.2
CFA Certified Pre-Fabricated Square Tube Wrap TPC-8.3
Field-Fabricated Square Tube Flashing TPC-8.4
CFA Certified Pre-Fabricated Split Pipe Seal TPC-8.5
CFA Certified Hot Pipe Flashing TPC-8.6

Terminations
Membrane Terminations, Page 1 of 3 ..... TPC-9.0A
Membrane Terminations, Page 2 of 3 ..... TPC-9.0B
Membrane Terminations, Page 3 of 3 ..... TPC-9.0C

Parapet Flashing
Parapet Base Wall Flashing – Fastened Into Deck or Wall TPC-12.1
PVC Coated Metal Wall Flashing TPC-12.3
Parapet Flashing / No Adhesion – Any Height Option TPC-12.6

Tie-Ins
PVC Tie-In To Existing Single-Ply Roof With Curb TPC-13.3
Tie-In to Shingled or Metal Panel Roof TPC-13.6
PVC/KEE HP Tie-In to Existing Single-Ply Roof Membranes on Concrete Deck TPC-13.7
PVC/KEE HP Tie-In to Existing Single-Ply Roof Membranes on Metal Deck TPC-13.8

Inside / Outside Corners

Pre-Molded Inside Corner Flashing TPC-15.1
Field Fabricated Inside Corner Flashing TPC-15.2
Inside Corner with PVC Coated Metal Wall Flashing TPC-15.3
Pre-Molded Outside Corner Flashing TPC-15.4
Field Fabricated Outside Corner Flashing TPC-15.5
Outside Corner with PVC Coated Metal Wall Flashing TPC-15.6
PVC Universal Corners – Combination Inside & Outside Corners TPC-15.7

Sealant Pocket

Molded Sealant Pocket TPC-16.1
Field-Fabricated PVC Coated Metal Pocket TPC-16.2

Through-Wall Scupper

Prefabricated Scupper with Coated Metal TPC-18.1
Scupper with Uncoated Metal, Page 1 of 2 ..... TPC-18.2
Scupper with Uncoated Metal, Page 2 of 2 ..... TPC-18.2

Lightning Rods

Lightning Rod at Parapet (Vertical Attachment) TPC-20.1
Lightning Rod at Deck Level TPC-20.2

Sleeper

Sleeper TPC-24.0

Accessories

VersiFlex PVC Rib: Typical Profile TPC-25.1
VersiFlex PVC Rib: Various Applications TPC-25.2
VersiFlex PVC Rib: Example of Dome / Ribs Aligned TPC-25.3

GUIDELINES FOR ROOF PERIMETER ZONES FOR MECHANICALLY ATTACHED ROOF SYSTEM

PERIMETER ZONES

SAME LEVEL ROOF

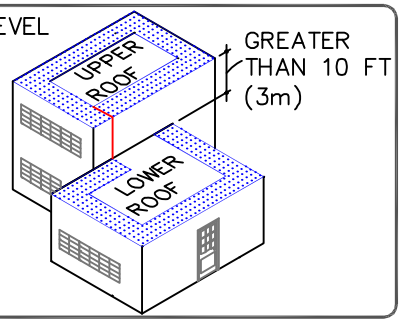

SPLIT LEVEL ROOFS

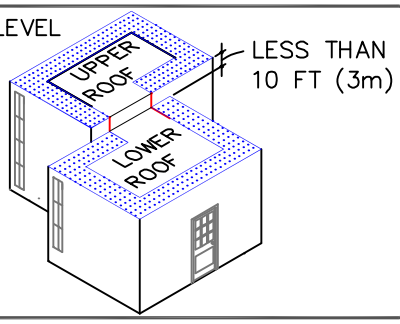

CANOPY ROOF

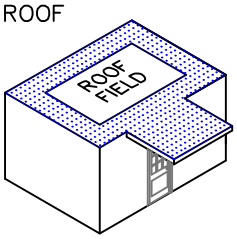

INSTALL PERIMETER SHEETS OVER THE ENTIRE OVERHANG (PROJECTION ROOF) AREA, EXTENDING ONTO THE MAIN ROOF DECK WHEN AT THE SAME LEVEL AS SHOWN.

LARGE OPENINGS OR LOADING DOCKS

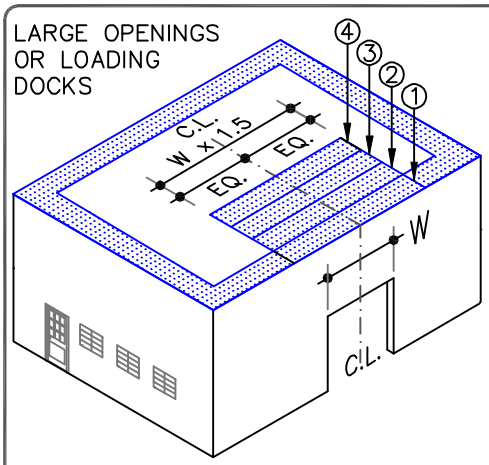

4 PERIMETER SHEETS CENTERED OVER LARGE OPENINGS

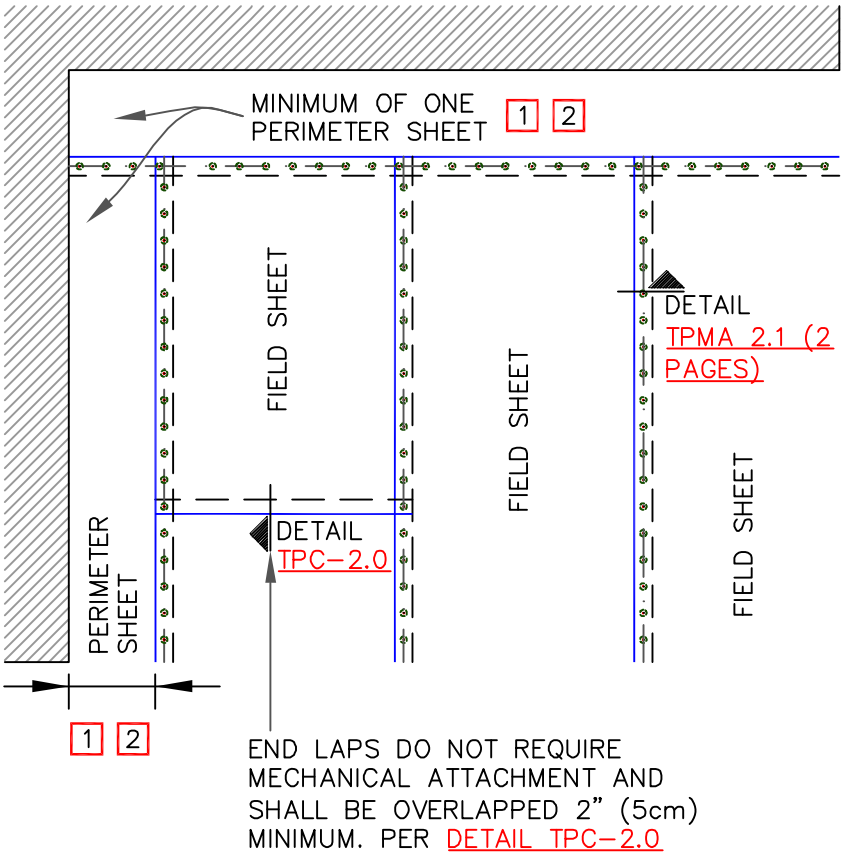

NOTES:

1. PERIMETER SHEETS:

   1.1. WHEN USING 10' (3m) WIDE FIELD SHEETS, 5' (1.5m) WIDE PERIMETER SHEETS ARE UTILIZED.

   1.2. WHEN USING 81" (2.1m) WIDE FIELD SHEETS, 40.5" (1m) WIDE PERIMETER SHEETS ARE UTILIZED.

2. REFER TO VERSICO SPECIFICATIONS FOR REQUIRED NUMBER OF PERIMETER SHEETS, SHEET WIDTH AND MEMBRANE FASTENING SPACING.

© 2024 VERSICO

MEMBRANE SECUREMENT

MAXIMUM WARRANTY: 30 YEARS

PVC/PVC KEE MEMBRANE
APPROVED SUBSTRATE
0 → SEE NOTE
PS (PRESSURE SENSITIVE)

TPMA (Thermoplastic Mechanically Attached Membrane)

TPMA-2.0A

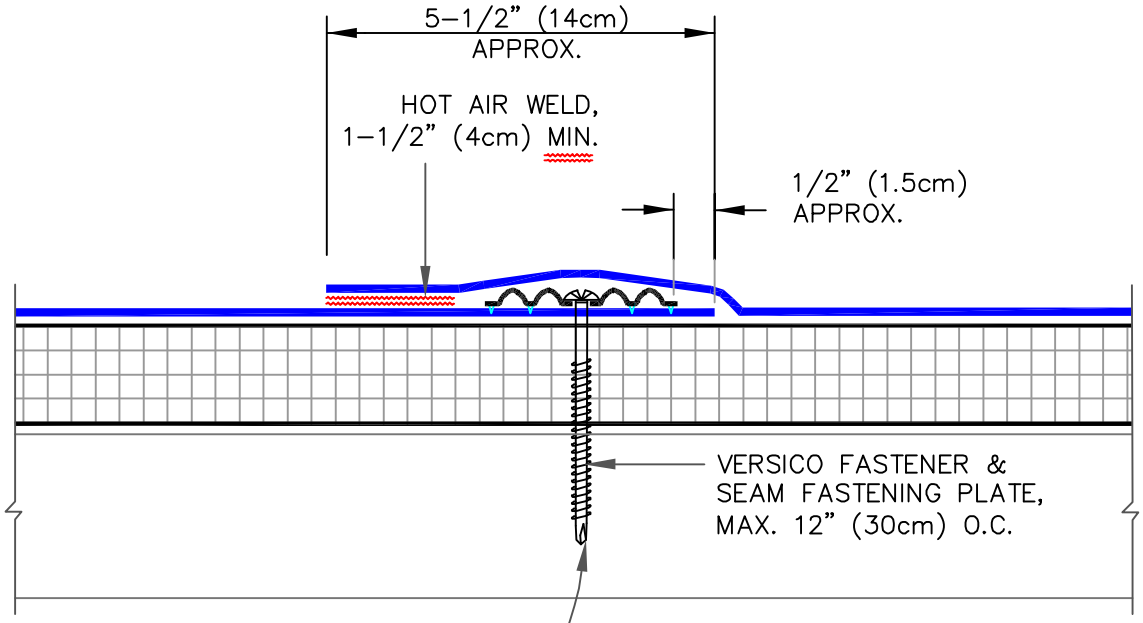

FASTENER TYPES ON MECHANICALLY ATTACHED ROOF ASSEMBLY

DECK TYPE	OPTION	FASTENER	PLATE
STEEL OR WOOD	A	HPVX	HPVX
	B	HPV–XL	HPV–XL
STRUCTURAL CONCRETE	A	CD–10	HPVX
	B	MP 14–10	HPVX

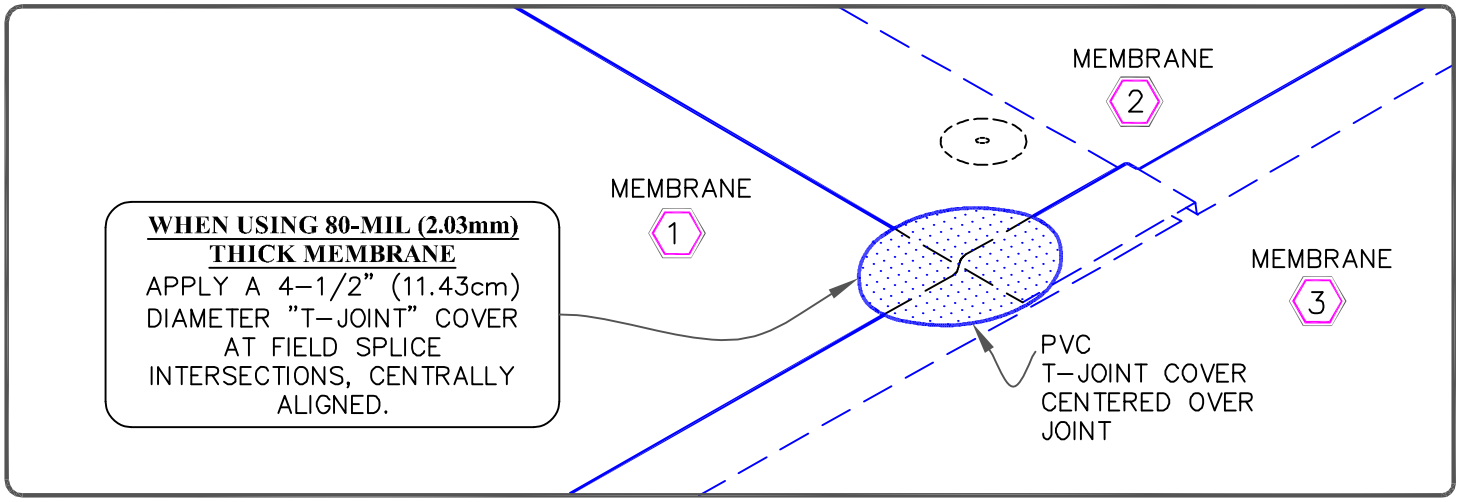

VERSICO ROOFING SYSTEMS
© 2024 VERSICO

MECHANICALLY ATTACHED SEAM, PAGE 1 OF 2

MAXIMUM WARRANTY: 30 YEARS

PVC/PVC KEE MEMBRANE
APPROVED SUBSTRATE
0 → SEE NOTE
PS (PRESSURE SENSITIVE)

TPMA (Thermoplastic Mechanically Attached Membrane)

TPMA–2.1

FASTENER TYPES ON MECHANICALLY ATTACHED ROOF ASSEMBLY

DECK TYPE	OPTION	FASTENER	PLATE
STEEL OR WOOD	A	HPVX	HPVX
	B	HPV–XL	HPV–XL
STRUCTURAL CONCRETE	A	CD–10	HPVX
	B	MP 14–10	HPVX

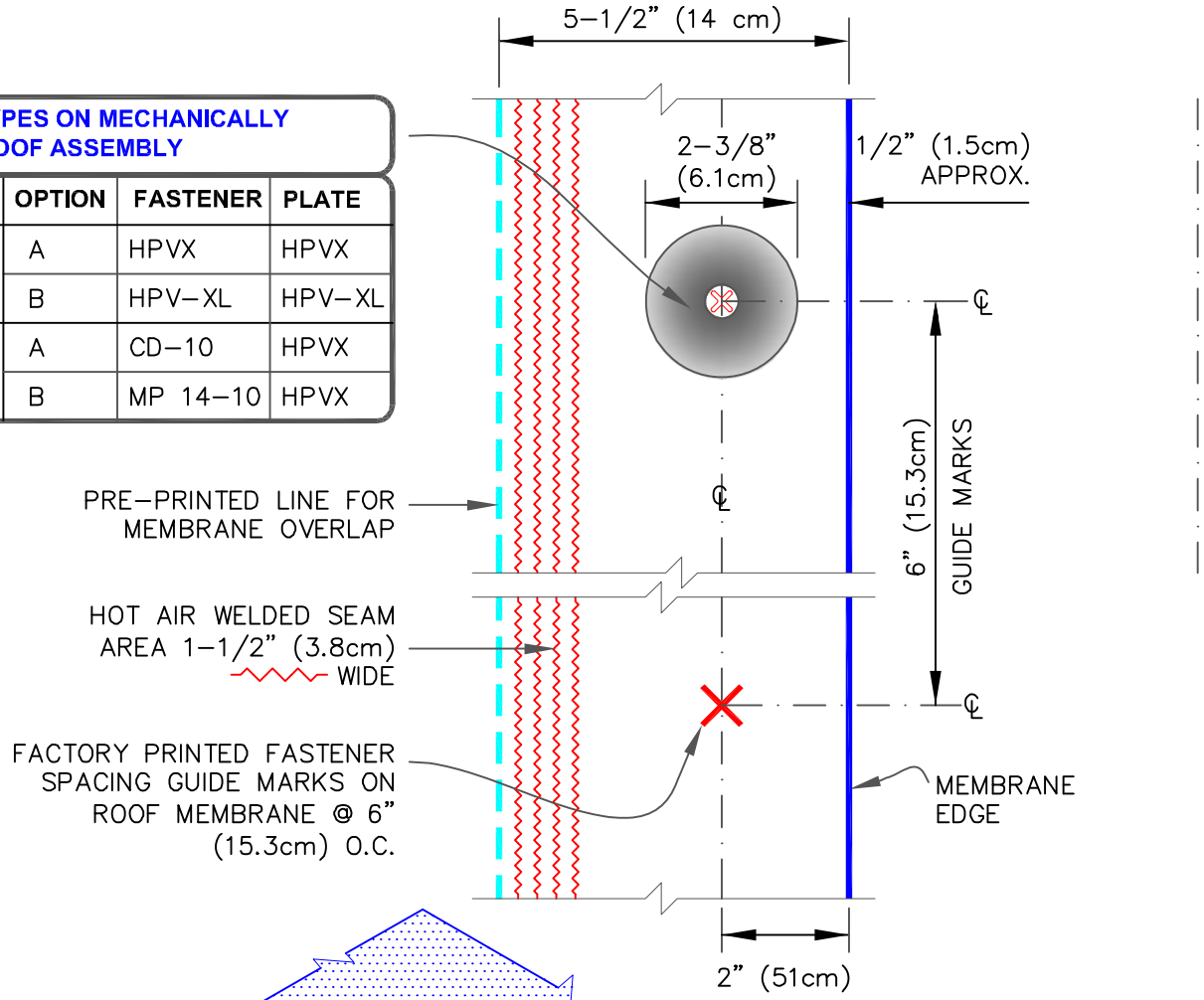

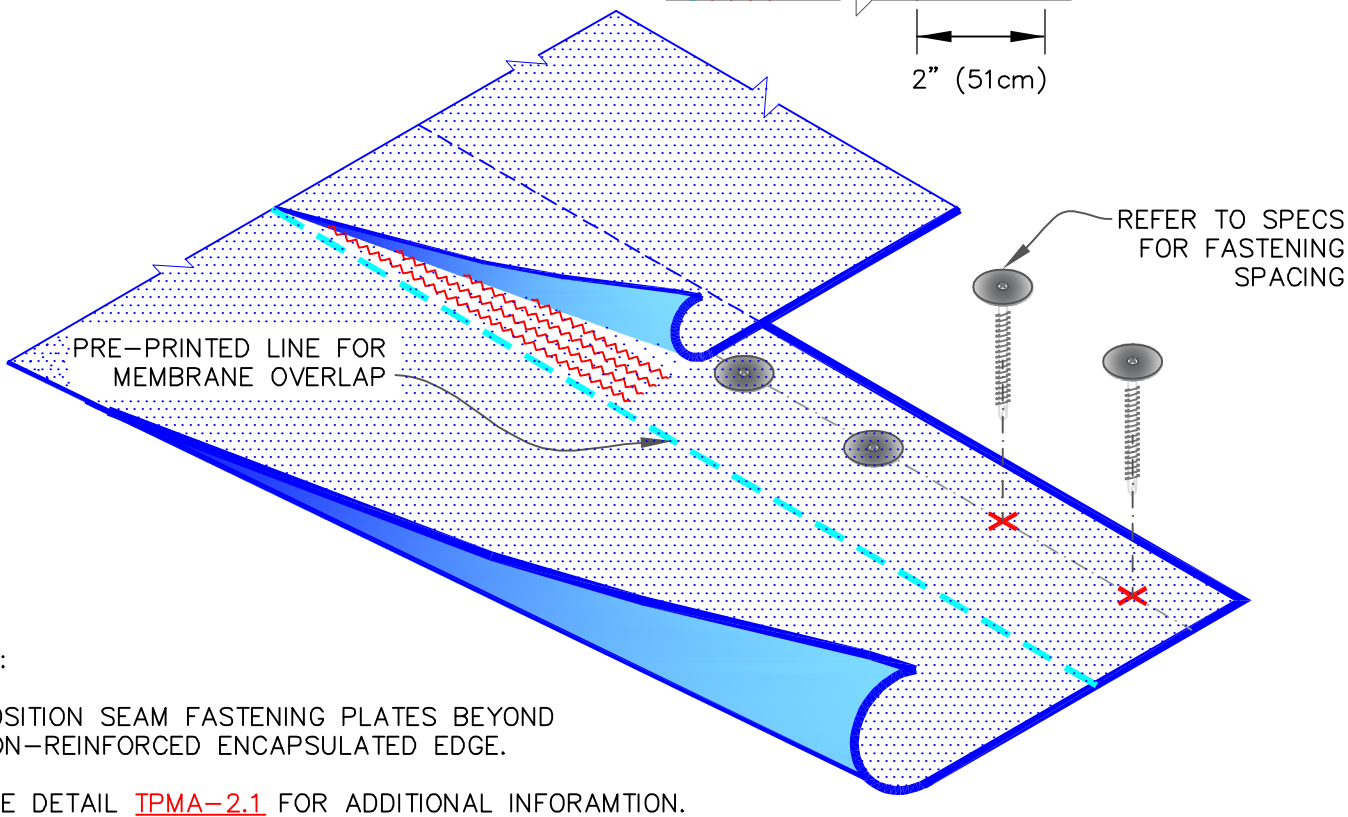

NOTES:

1. POSITION SEAM FASTENING PLATES BEYOND NON–REINFORCED ENCAPSULATED EDGE.
2. SEE DETAIL TPMA–2.1 FOR ADDITIONAL INFORAMTION.

VERSICO ROOFING SYSTEMS
© 2024 VERSICO

MECHANICALLY ATTACHED SEAM, PAGE 2 OF 2

MAXIMUM WARRANTY: 30 YEARS

PVC/PVC KEE MEMBRANE
APPROVED SUBSTRATE
0 → SEE NOTE
PS (PRESSURE SENSITIVE)

TPMA (Thermoplastic Mechanically Attached Membrane)

TPMA–2.1

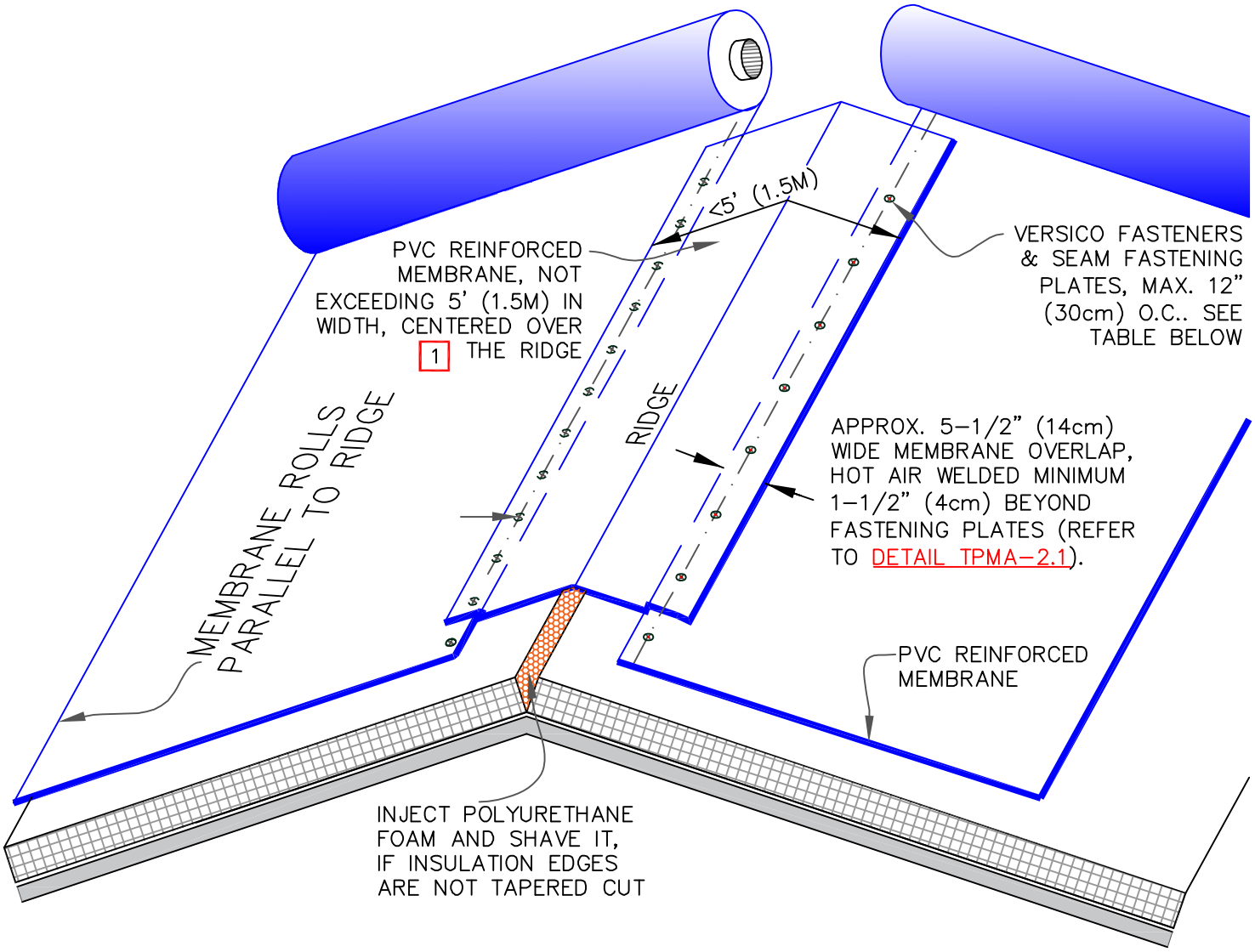

NOTES

1. RIDGE MEMBRANE ATTACHMENT IS ONLY REQUIRED WHEN ROOF SLOPE EXCEEDS 3" (7.5cm) TO 12" (30.5cm) HORIZONTAL.

2. POSITION FASTENING PLATES 1/2" (1.5cm) MINIMUM TO 1" (2.5cm) MAXIMUM FROM THE EDGE OF THE DECK MEMBRANE.

3. REFER TO VERSICO SPECIFICATIONS FOR REQUIRED NUMBER OF PERIMETER SHEETS, SHEET WIDTH AND MEMBRANE FASTENING SPACING.

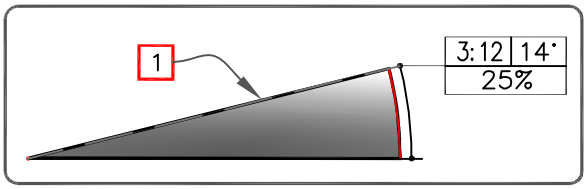

FASTENER TYPES ON MECHANICALLY ATTACHED ROOF ASSEMBLY

DECK TYPE	OPTION	FASTENER	PLATE
STEEL OR WOOD	A	HPVX	HPVX
	B	HPV-XL	HPV-XL
STRUCTURAL CONCRETE	A	CD-10	HPVX
	B	MP 14-10	HPVX

VERSICO ROOFING SYSTEMS
© 2024 VERSICO

RIDGE MEMBRANE ATTACHMENT

MAXIMUM WARRANTY: 30 YEARS

PVC/PVC KEE MEMBRANE
APPROVED SUBSTRATE
0 → SEE NOTE
PS (PRESSURE SENSITIVE)

TPMA (Thermoplastic Mechanically Attached Membrane)

TPMA-22.0

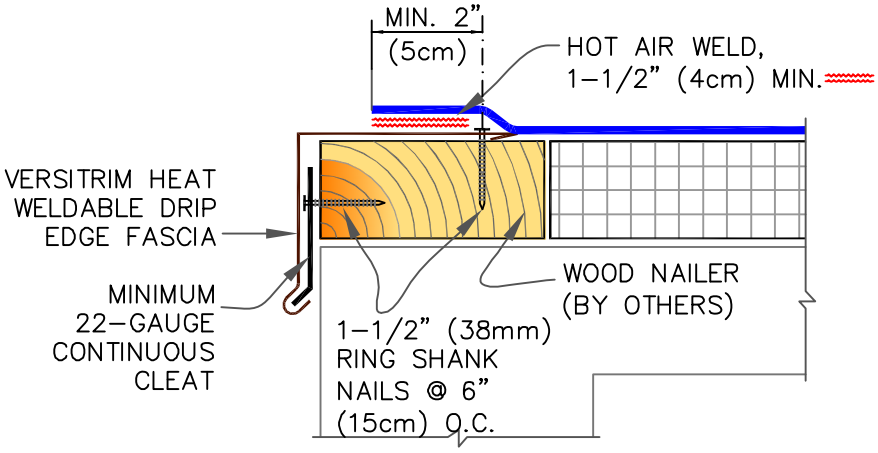

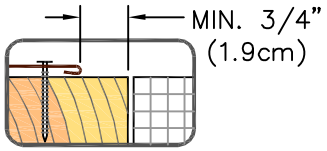

SEQUENCE:

1. 3" (7.6cm) REINFORCED MEMBRANE STRIPPING.
2. FIELD MEMBRANE.
3. TOP 6" (15.2cm) NON–REINFORCED MEMBRANE STRIPPING.

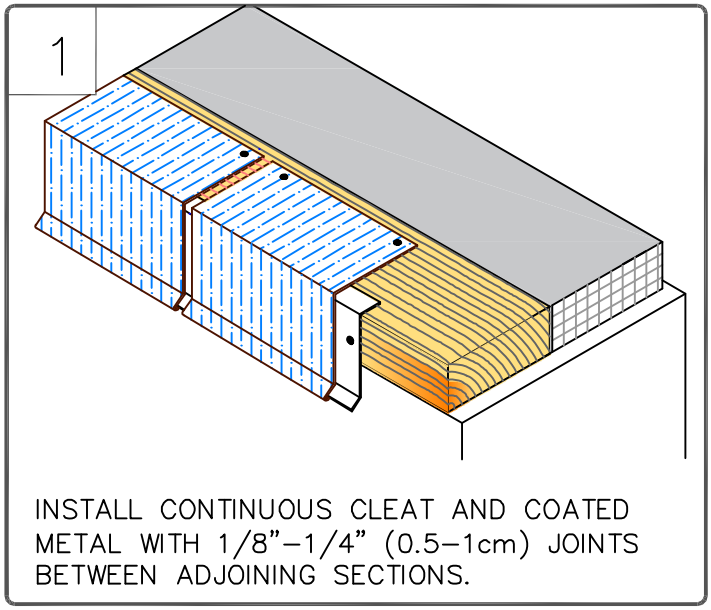

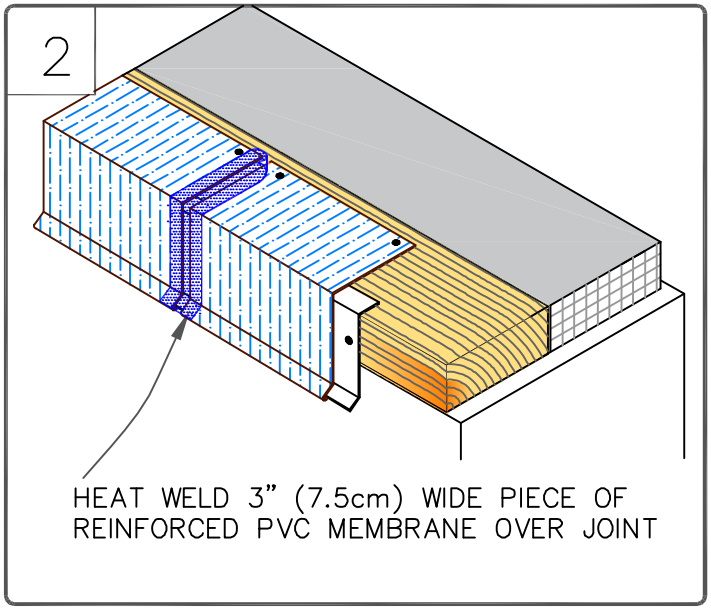

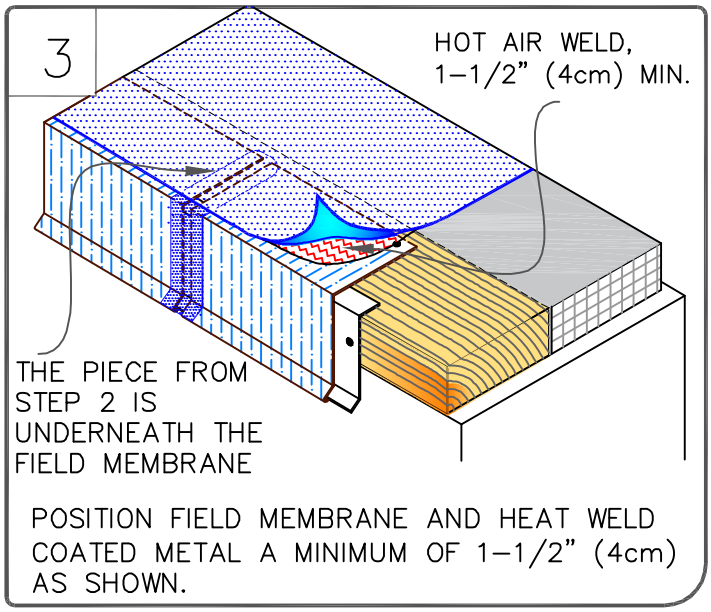

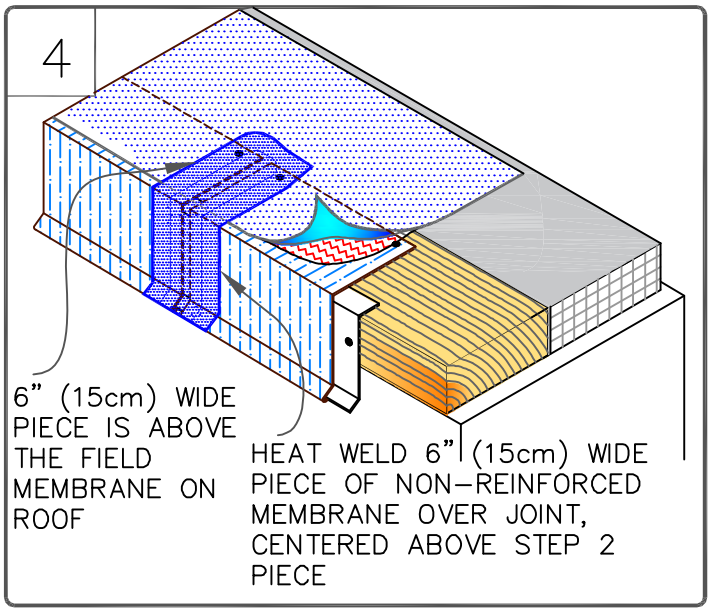

VERSICO ROOFING SYSTEMS

© 2024 VERSICO

VERSITRIM HEAT WELDABLE DRIP EDGE FASCIA

MAXIMUM WARRANTY: 30 YEARS

PVC/PVC KEE MEMBRANE
APPROVED SUBSTRATE
0 → SEE NOTE
PS (PRESSURE SENSITIVE)

TPC (Thermoplastic Common Details)

TPC–1.2

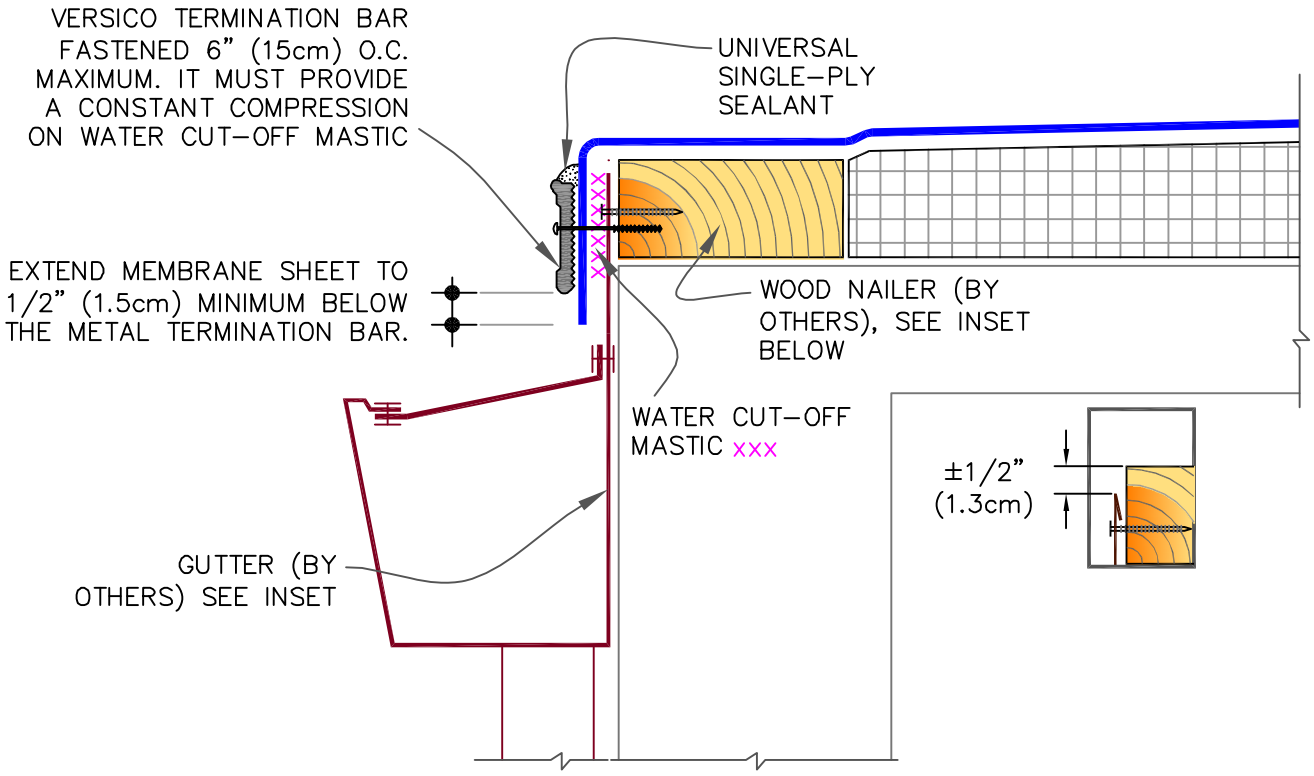

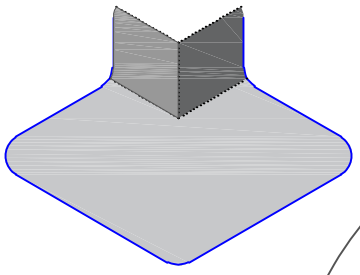

60-MIL (1.52mm) THICK PVC, UNIVERSAL CORNER CAN BE USED FOR AT TOP CORNER. CUT AS SHOWN IN DETAIL TPC-15.7

DESIGNER MAY USE VERSICO VERSITRIM TERMINATION BAR WITH FASCIA COVER ALSO

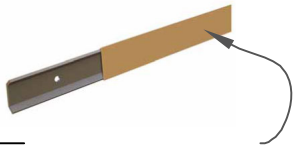

COLORED COVER

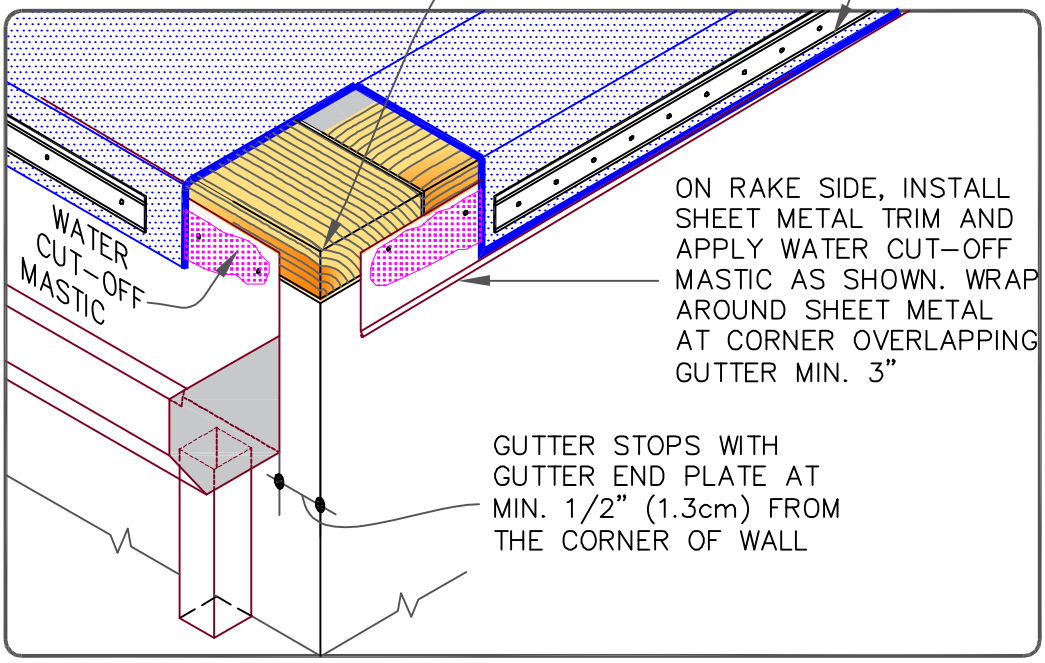

VERSICO ROOFING SYSTEMS
© 2024 VERSICO

METAL BAR EDGE TERMINATION

MAXIMUM WARRANTY: 30 YEARS

PVC/PVC KEE MEMBRANE
APPROVED SUBSTRATE
0 → SEE NOTE
PS (PRESSURE SENSITIVE)

TPC (Thermoplastic Common Details)

TPC-1.3

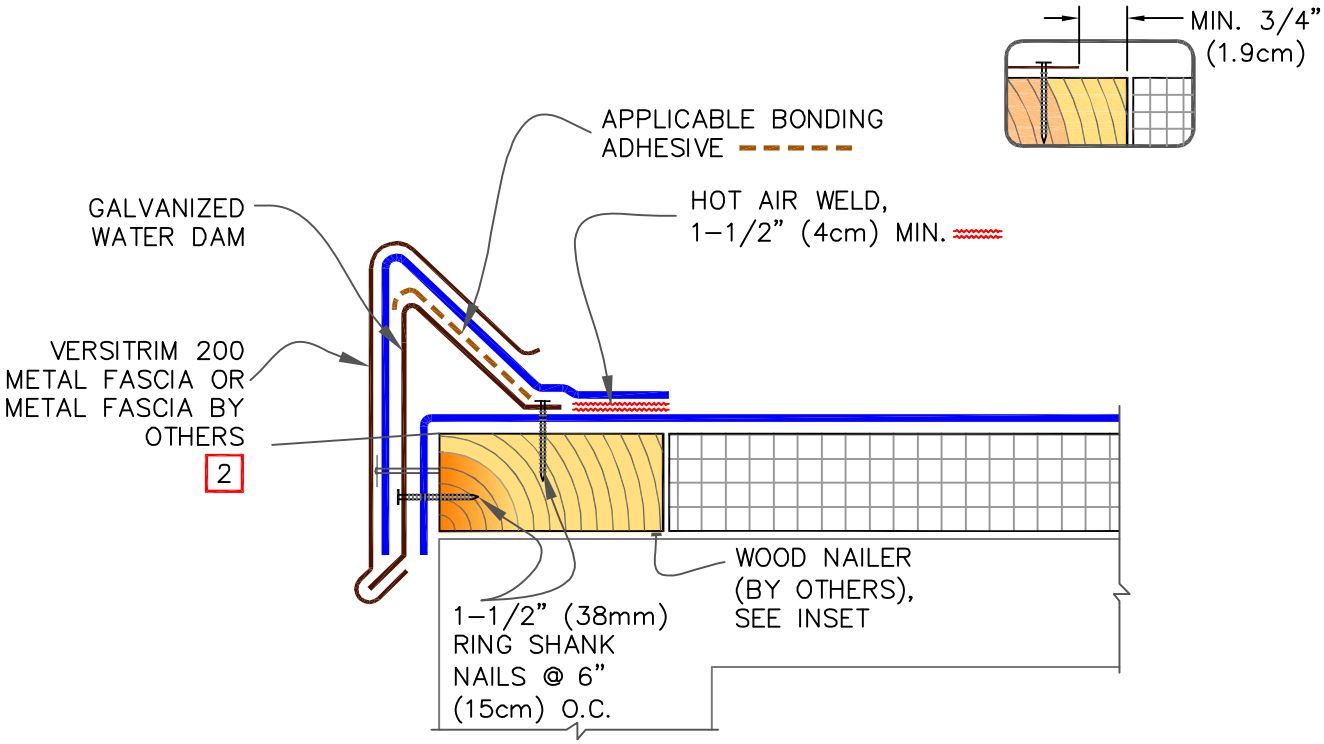

NOTES:

1. REFER TO VERSITRIM 200 INSTRUCTION MANUAL FOR STEP-BY-STEP INSTALLATION PROCEDURES.

2. WHEN METAL FASCIA BY OTHERS IS USED, FASTENER TYPE AND FASTENING FREQUENCY SHALL BE RECOMMENDED BY METAL EDGE MANUFACTURER.

VERSITRIM 200

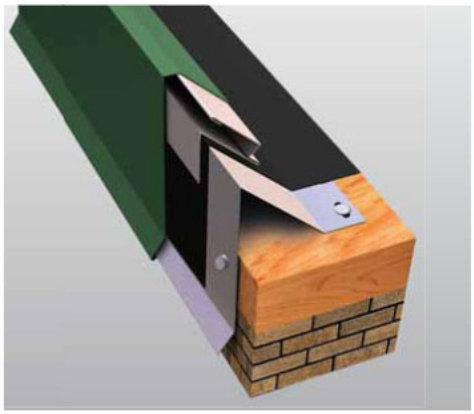

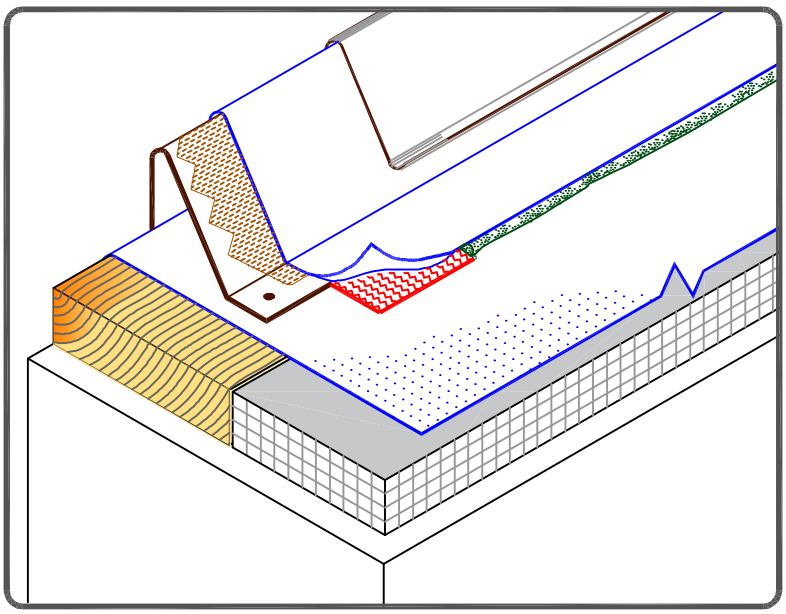

VERSICO ROOFING SYSTEMS
© 2024 VERSICO

VERSITRIM 200

MAXIMUM WARRANTY: 30 YEARS

PVC/PVC KEE MEMBRANE
APPROVED SUBSTRATE
0 SEE NOTE
PS (PRESSURE SENSITIVE)

TPC (Thermoplastic Common Details)

TPC-1.4

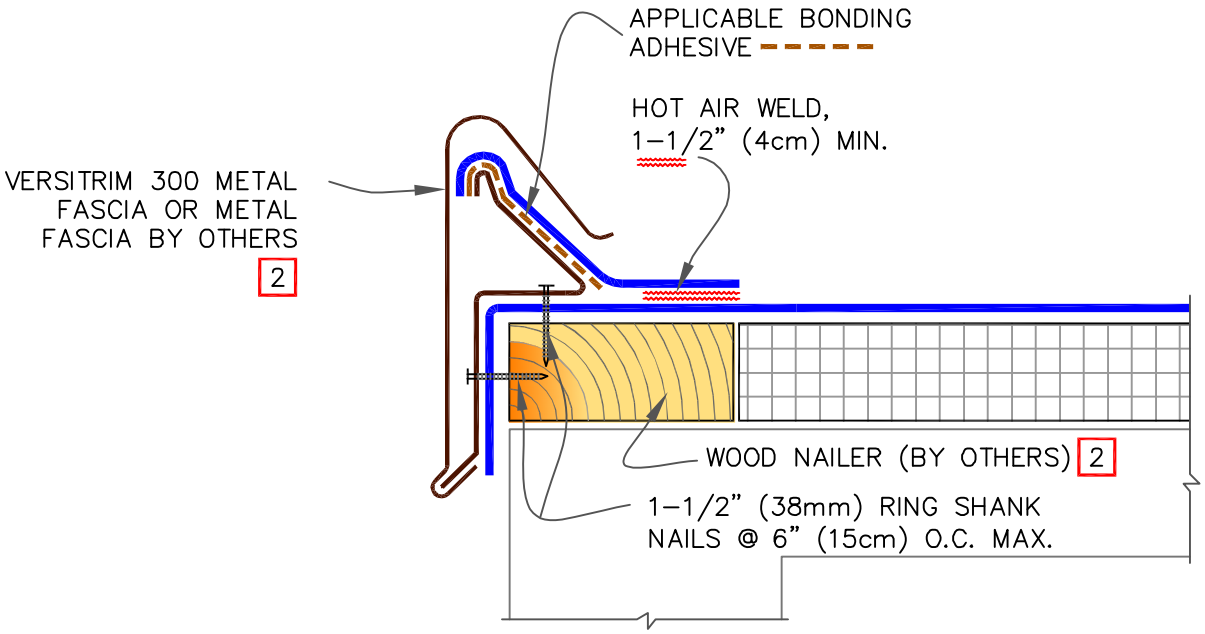

NOTES:

1. REFER TO VERSITRIM 300 INSTRUCTION MANUAL FOR STEP–BY–STEP INSTALLATION PROCEDURES.

2. WOOD NAILER MUST EXTEND PAST TOTAL WIDTH OF VERSITRIM DECK FLANGE.

3. WHEN METAL FASCIA BY OTHERS IS USED, FASTENER TYPE AND FASTENING FREQUENCY SHALL BE RECOMMENDED BY METAL EDGE MANUFACTURER.

VERSITRIM 300

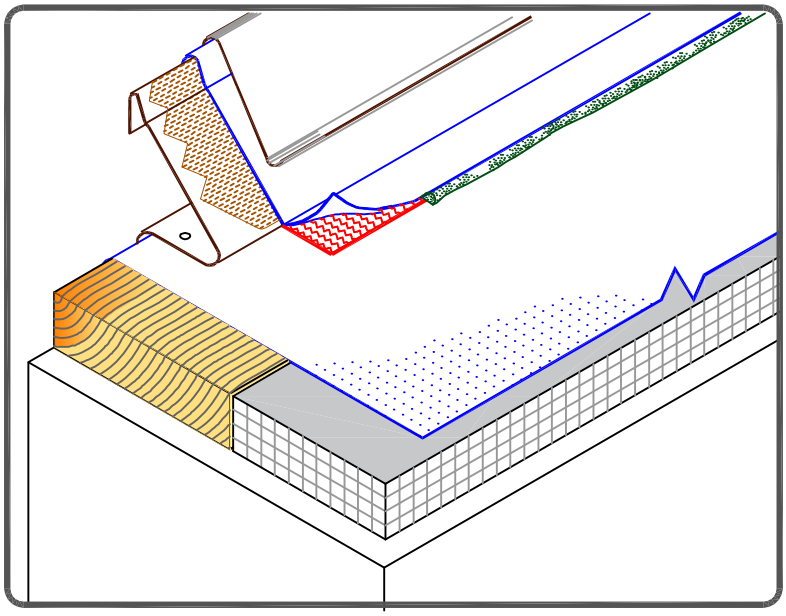

VERSICO ROOFING SYSTEMS
© 2024 VERSICO

VERSITRIM 300

MAXIMUM WARRANTY: 30 YEARS

PVC/PVC KEE MEMBRANE
APPROVED SUBSTRATE
0 SEE NOTE
PS (PRESSURE SENSITIVE)

TPC (Thermoplastic Common Details)

TPC–1.5

VERSITRIM 2000

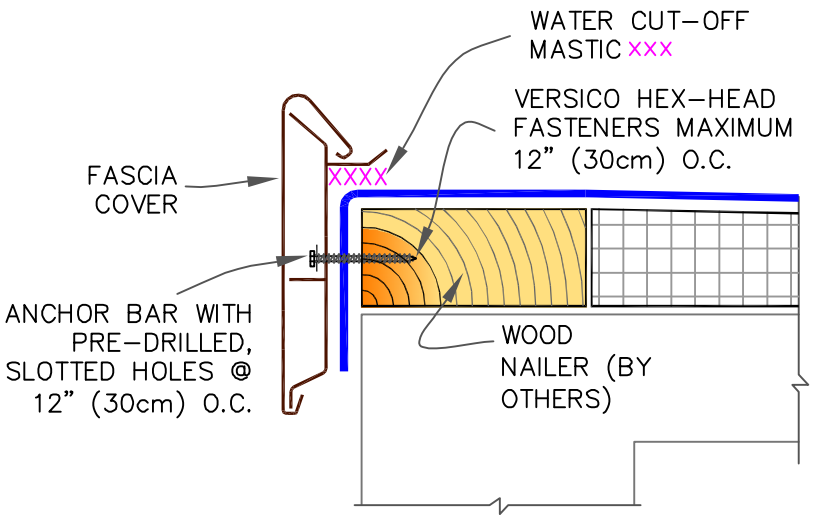

NOTES:

1. REFER TO VERSITRIM INSTALLATION INSTRUCTION MANUAL FOR THE STEP BY STEP INSTALLATION PROCEDURES AND FOR THE VARIOUS PRODUCT FEATURES AVAILABLE.
2. IF INCIDENTAL/TEMPORARY PONDED WATER IS EXPECTED, THE VERSITRIM MUST BE ELEVATED AND SCUPPERS PROVIDED FOR DRAINAGE.
3. ENSURE ROOF SLOPES AWAY FROM VERSITRIM .

VERSITRIM 3000

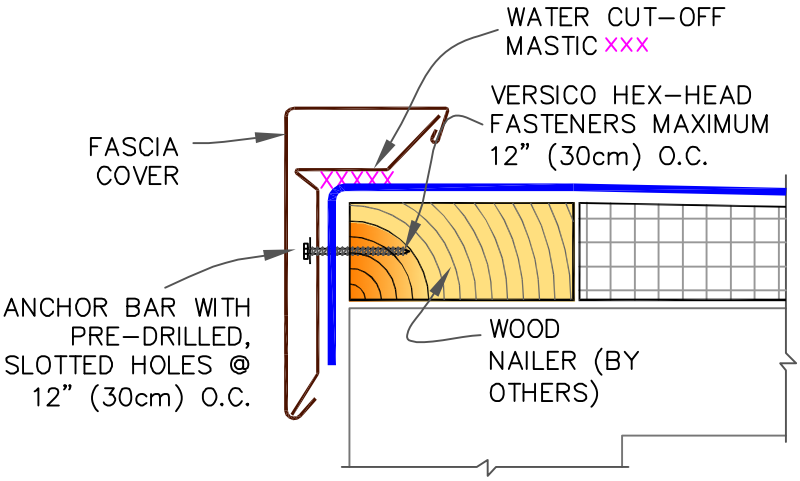

VERSITRIM ANCHOR BAR ADDITIONAL OPTION

VERSICO ROOFING SYSTEMS
© 2024 VERSICO

VERSITRIM 2000 & 3000

MAXIMUM WARRANTY: 30 YEARS

PVC/PVC KEE MEMBRANE
APPROVED SUBSTRATE
0 SEE NOTE
PS (PRESSURE SENSITIVE)

TPC (Thermoplastic Common Details)

TPC-1.6

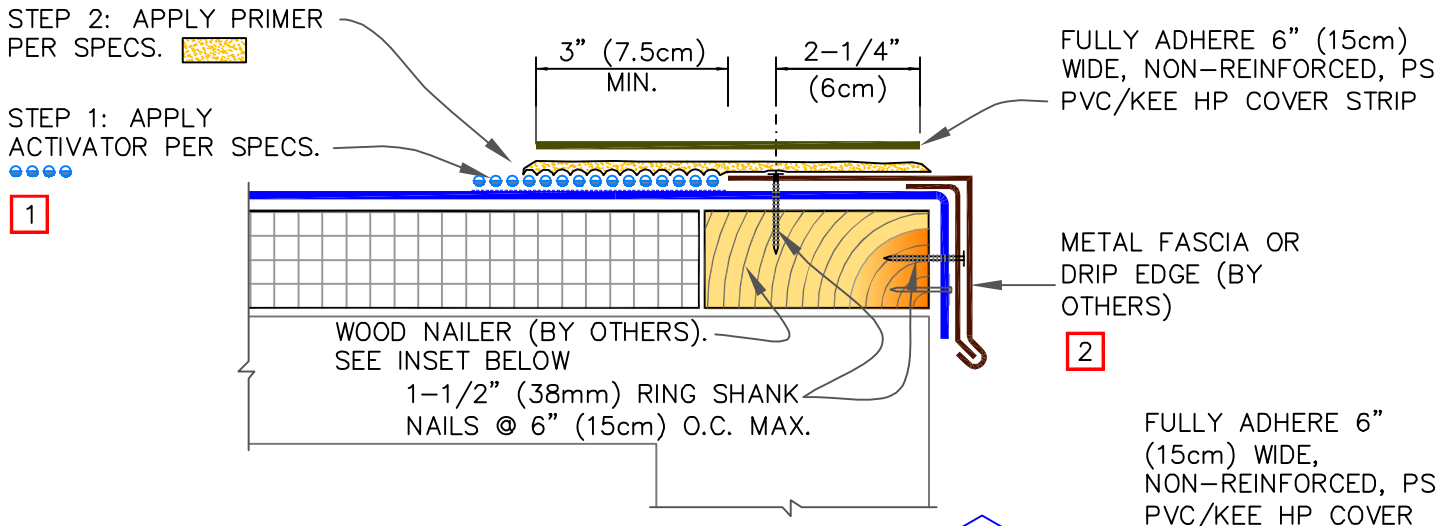

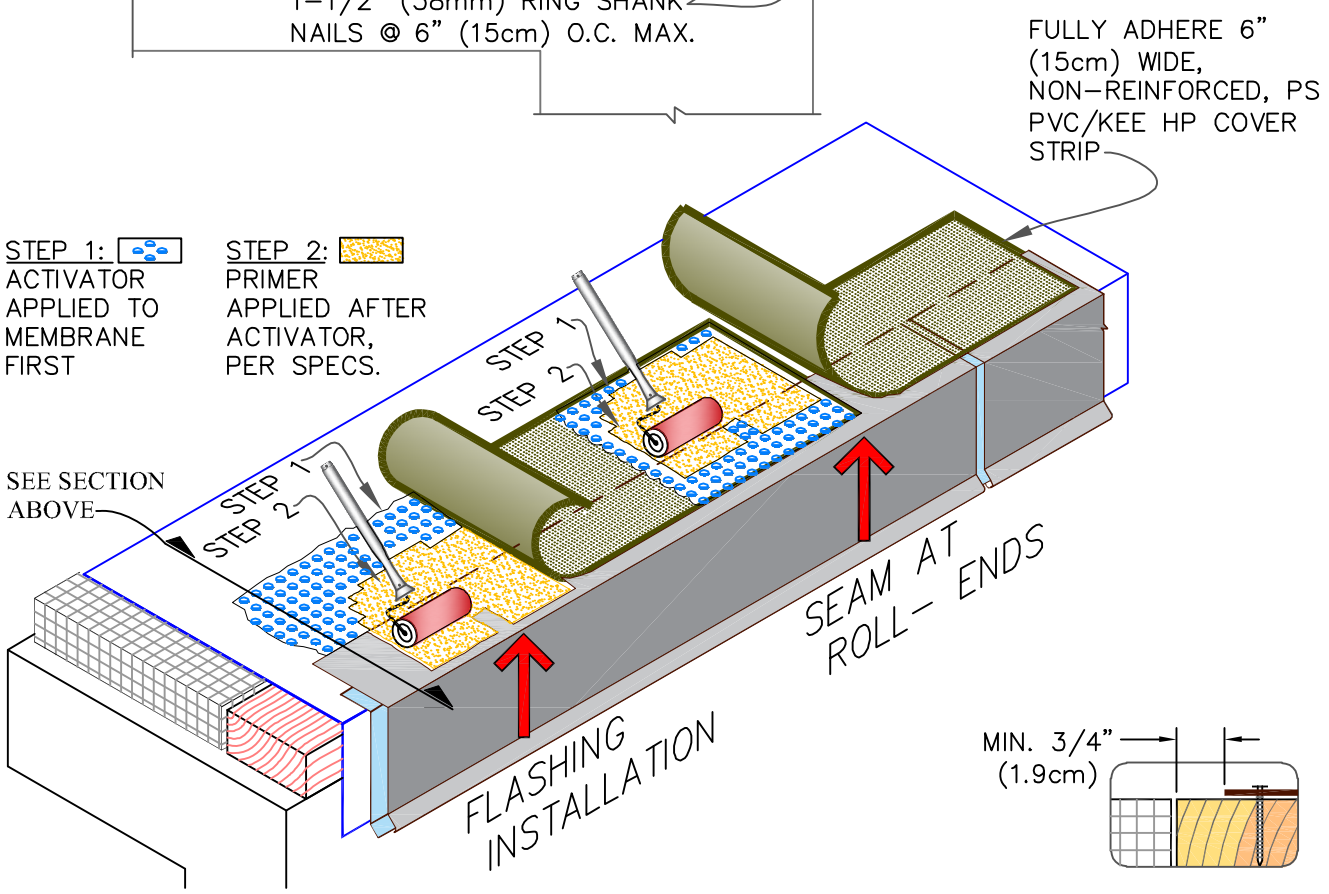

NOTES:

1. TO REMOVE FINISHING OILS, SCRUB METAL FLANGE WITH PVC & KEE HP MEMBRANE CLEANER; ALLOW TO DRY PRIOR TO APPLYING PRIMER.
2. WHEN METAL FASCIA BY OTHERS IS USED, FASTENER TYPE AND FASTENING FREQUENCY SHALL BE RECOMMENDED BY METAL EDGE MANUFACTURER.
3. TO ENSURE PVC PRESSURE-SENSITIVE COVER STRIP CONFORMS TO STEPS-OFF, HEAT COVER STRIP AT SPLICE INTERSECTIONS PRIOR TO ROLLING.
4. THIS DETAIL IS NOT RECOMMENDED FOR ROOFS THAT ARE LIKELY TO EXPERIENCE SIGNIFICANT SNOW AND ICE. REFER TO COATED EDGE METAL DETAILS.

VERSICO ROOFING SYSTEMS
© 2024 VERSICO

PRESSURE-SENSITIVE PVC/KEE HP COVER STRIP

MAXIMUM WARRANTY: 30 YEARS

PVC/PVC KEE MEMBRANE
APPROVED SUBSTRATE
0 → SEE NOTE
PS (PRESSURE SENSITIVE)

TPC (Thermoplastic Common Details)

TPC-1.7

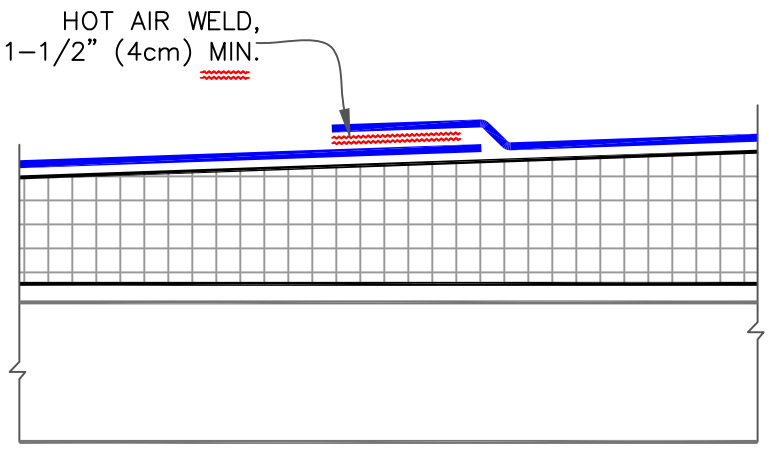

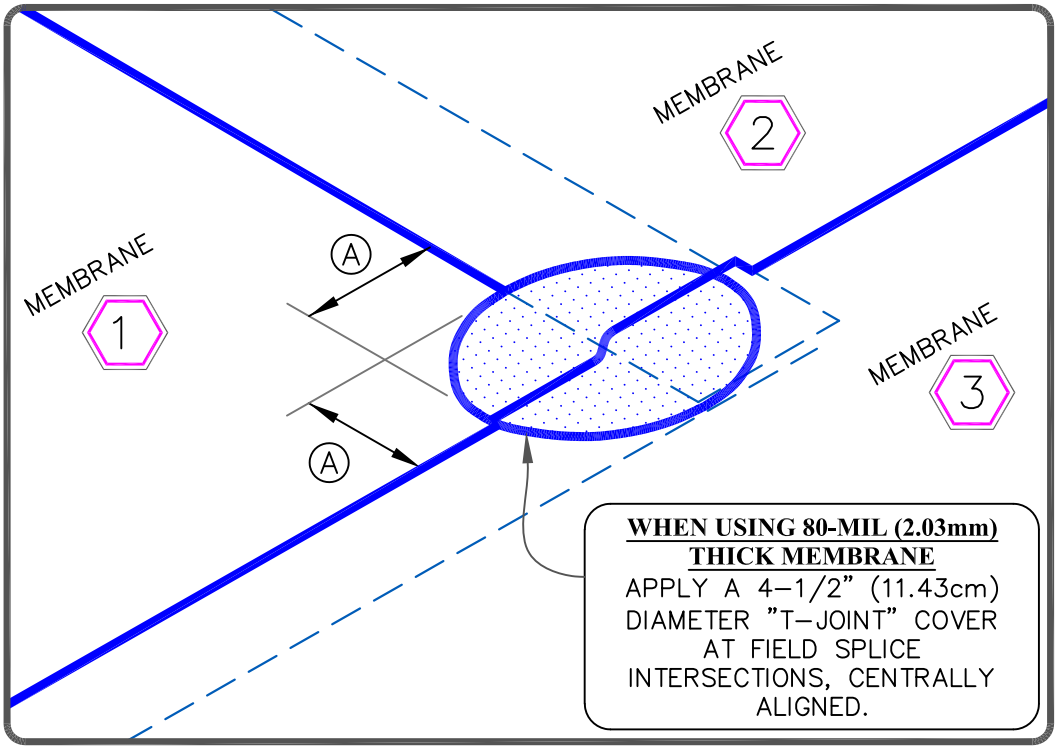

DIMENSIONS		cm	
A	2–1/4"	6	MIN.

NOTE:

1. WHEN USING 60–MIL (1.52mm) MEMBRANE, MAXIMUM WARRANTY IS 20 YEARS.

VERSICO ROOFING SYSTEMS
© 2024 VERSICO

PVC/KEE HP MEMBRANE SPLICE

MAXIMUM WARRANTY: 30 YEARS. SEE NOTE # 1.

→ PVC/PVC KEE MEMBRANE
→ APPROVED SUBSTRATE
0 → SEE NOTE
PS (PRESSURE SENSITIVE)

TPC (Thermoplastic Common Details)

TPC–2.0

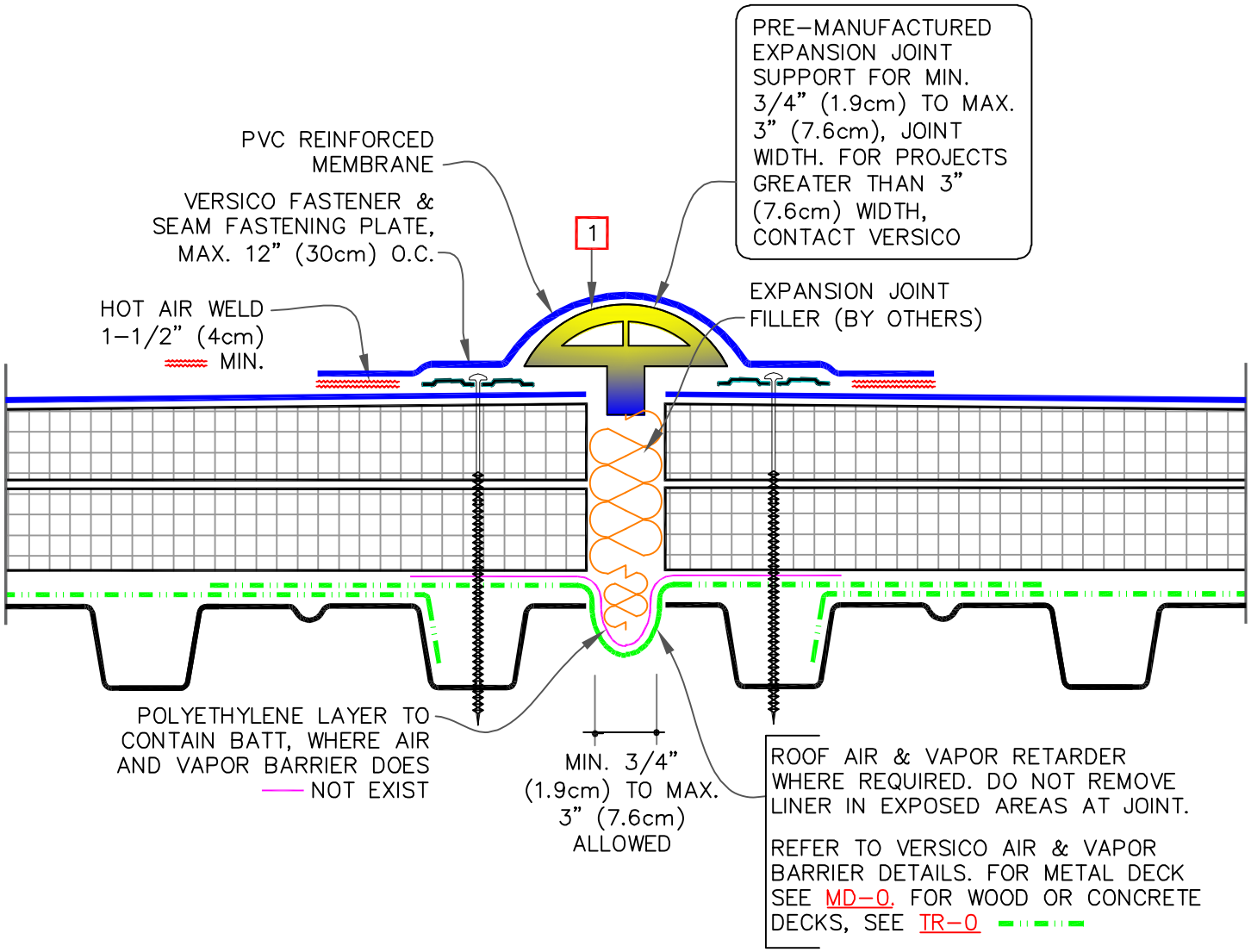

NOTES:

1. MEMBRANE FLASHING SHALL NOT BE ADHERED OVER THE EXPANSION JOINT SUPPORT.

2. WHEN THE EXPANSION JOINT INTERSECTS WITH A COATED METAL DRIP EDGE, THEN COATED METAL SHOULD BE GAPPED AND THE TPC–1.2 DETAIL BE FOLLOWED. DRIP EDGE BY OTHERS SHOULD ALSO BE GAPPED.

FASTENER TYPES ON MECHANICALLY ATTACHED ROOF ASSEMBLY

DECK TYPE	OPTION	FASTENER	PLATE
STEEL OR WOOD	A	HPVX	HPVX
	B	HPV–XL	HPV–XL
STRUCTURAL CONCRETE	A	CD–10	HPVX
	B	MP 14–10	HPVX

VERSICO ROOFING SYSTEMS
© 2024 VERSICO

DECK–TO–DECK ROOF EXPANSION JOINT

MAXIMUM WARRANTY: 30 YEARS

→ PVC/PVC KEE MEMBRANE
→ APPROVED SUBSTRATE
0 → SEE NOTE
PS (PRESSURE SENSITIVE)

TPC (Thermoplastic Common Details)

TPC–3.1

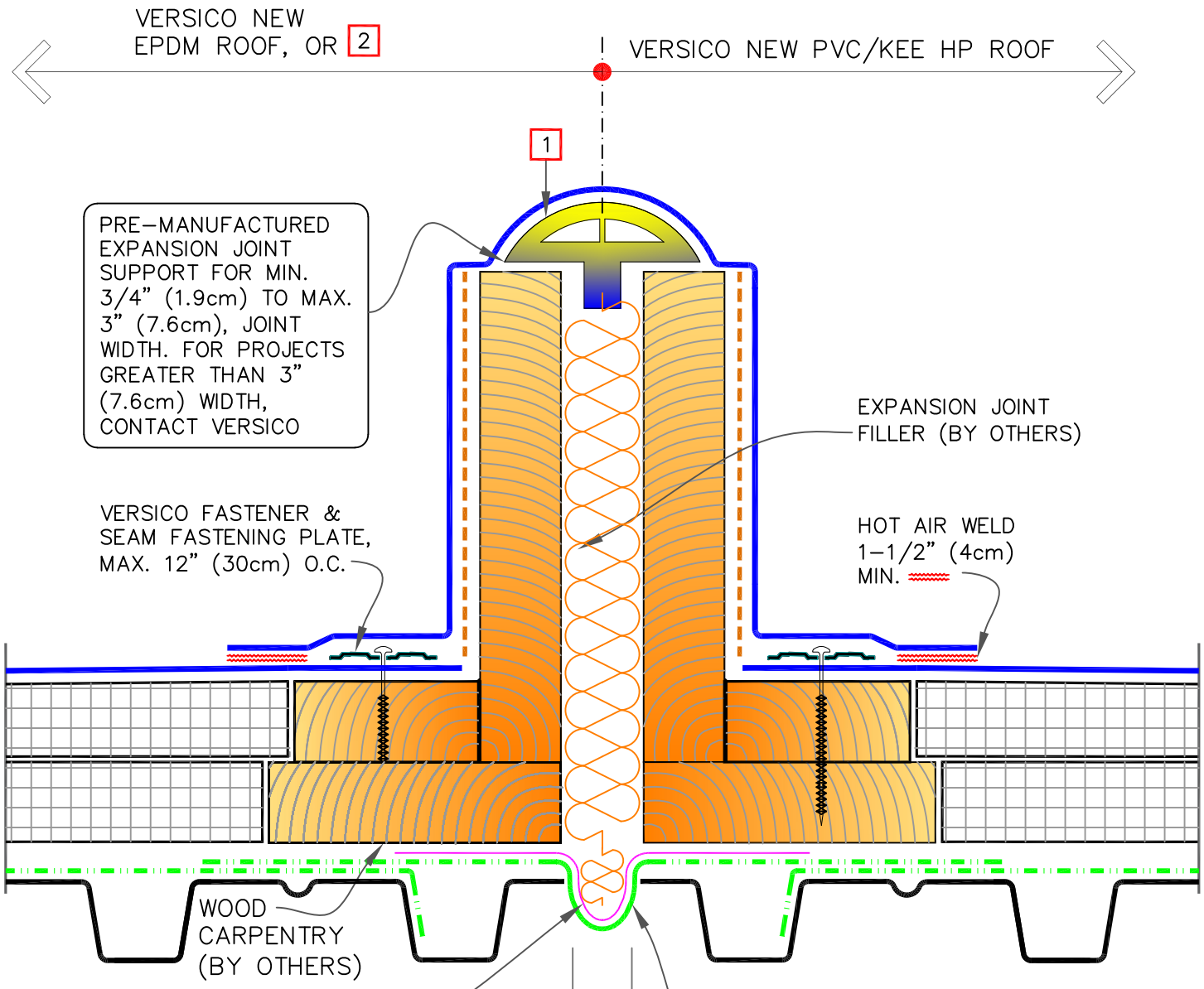

NOTES:

1. MEMBRANE FLASHING SHALL NOT BE ADHERED OVER THE EXPANSION JOINT SUPPORT.

2. IN CASE THE ROOF TYPE IS DIFFERENT, DESIGNER TO PROVIDE ROOF TYPE AND ITS CONDITION TO VERSICO TO DEVELOP TIE-IN DETAIL ON THIS SIDE ACCORDINGLY.

VERSICO ROOFING SYSTEMS

© 2024 VERSICO

DECK-TO-DECK CURBED EXPANSION JOINT

MAXIMUM WARRANTY: 30 YEARS

PVC/PVC KEE MEMBRANE
APPROVED SUBSTRATE
0 → SEE NOTE
PS (PRESSURE SENSITIVE)

TPC (Thermoplastic Common Details)

TPC-3.1A

CAUTION

WHEN A WARRANTY WIND SPEED GREATER THAN 90MPH IS SPECIFIED, VERSICO FASTENERS AND SEAM FASTENING PLATES SHALL NOT EXCEED 6" (15cm) ON CENTER FOR ADHERED MEMBRANE ASSEMBLIES.

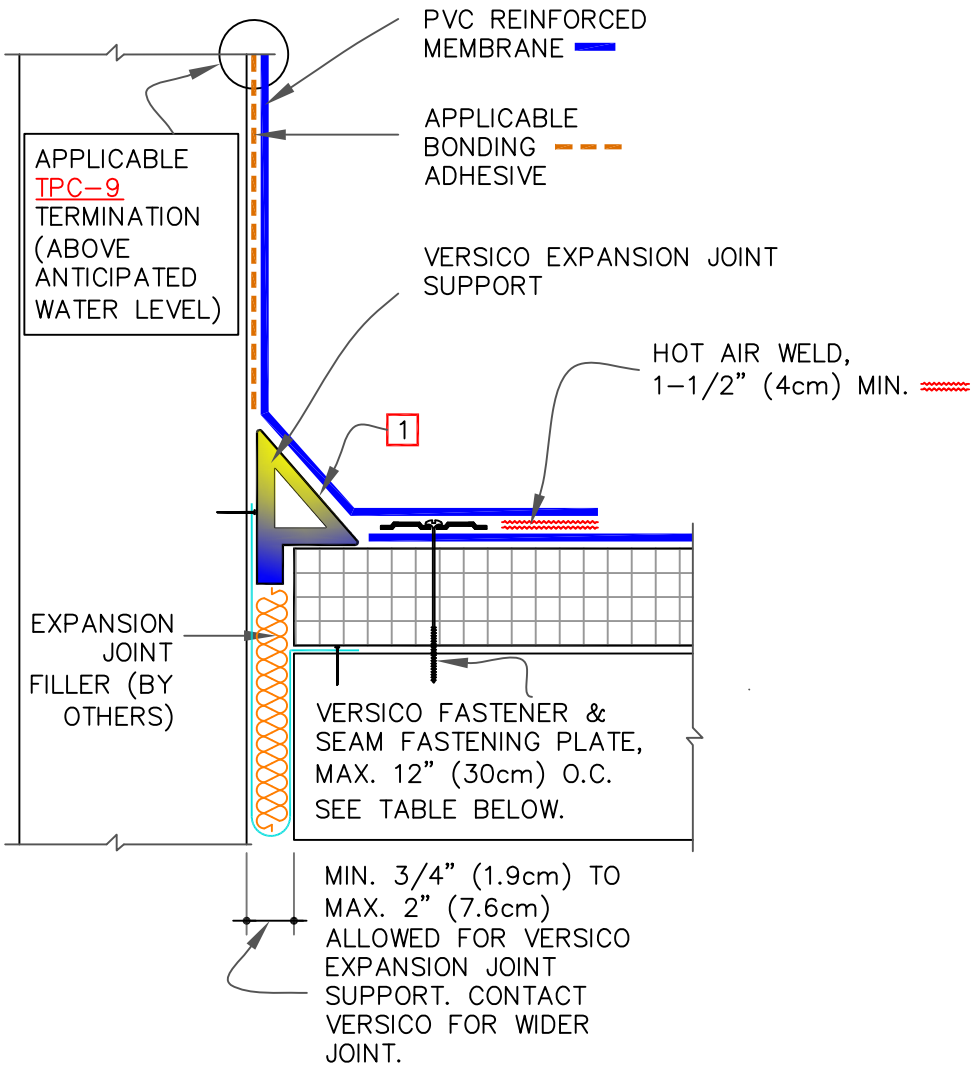

NOTE:

1. MEMBRANE FLASHING SHALL NOT BE ADHERED OVER THE EXPANSION JOINT SUPPORT.

FASTENER TYPES ON MECHANICALLY ATTACHED ROOF ASSEMBLY

DECK TYPE	OPTION	FASTENER	PLATE
STEEL OR WOOD	A	HPVX	HPVX
	B	HPV–XL	HPV–XL
STRUCTURAL CONCRETE	A	CD–10	HPVX
	B	MP 14–10	HPVX

VERSICO ROOFING SYSTEMS
© 2024 VERSICO

DECK–TO–WALL EXPANSION JOINT

MAXIMUM WARRANTY: 30 YEARS

→ PVC/PVC KEE MEMBRANE
→ APPROVED SUBSTRATE
0 → SEE NOTE
PS (PRESSURE SENSITIVE)

TPC (Thermoplastic Common Details)

TPC–3.2

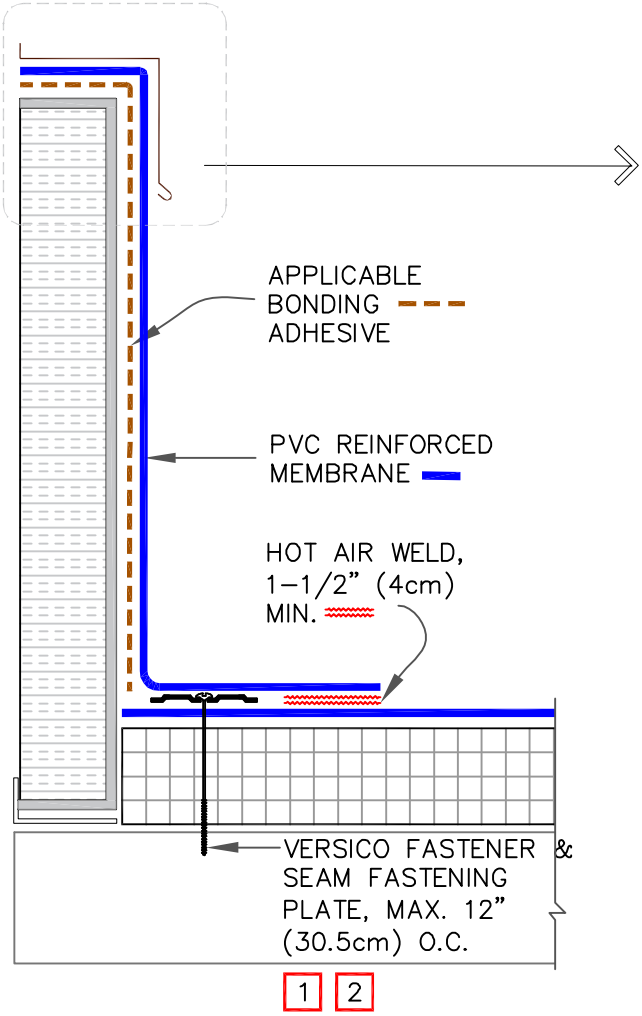

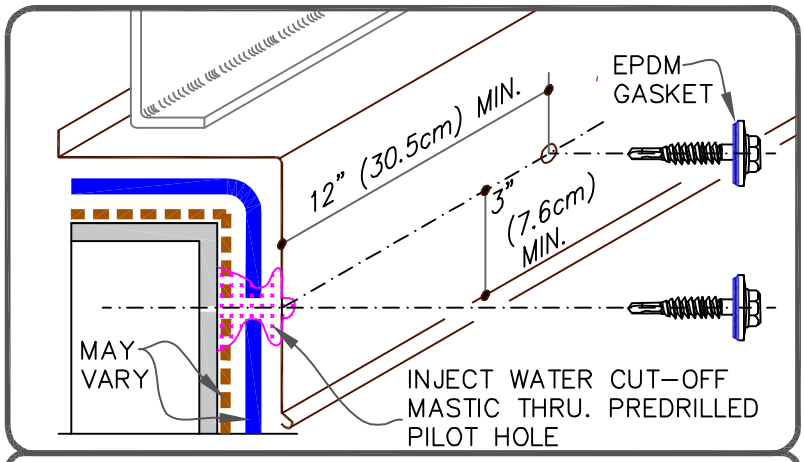

COUNTER FLASHING WITH WATERPROOF JOINERY & ATTACHMENT (BY OTHERS)

PVC ONLY (NOT KEE HP)
IN LIEU OF BONDING ADHESIVE, THE CURB FLASHING MAY BE INSTALLED IN CAV GRIP 3V.

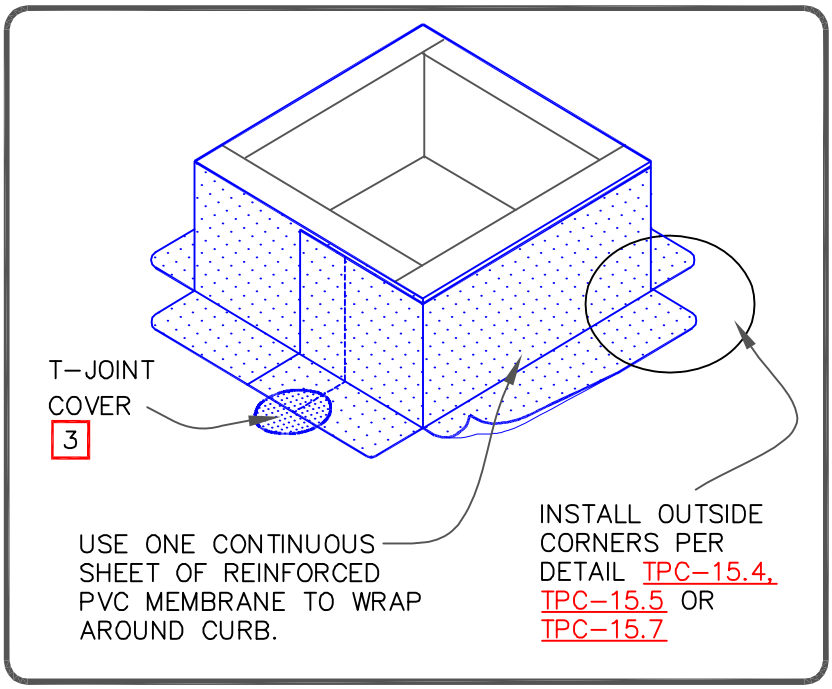

NOTES:

1. REFER TO VERSICO SPECIFICATIONS FOR ACCEPTABLE VERSICO FASTENERS AND PLATES.
2. MECHANICAL SECUREMENT MAY BE INSTALLED INTO THE VERTICAL SUBSTRATE.
3. WHEN USING 80 MIL (2.03mm) THICK CURB FLASHING, THE INTERSECTIONS BETWEEN SPLICES MUST OVERLAID WITH A PVC "T-JOINT" COVER.

VERSICO ROOFING SYSTEMS
© 2024 VERSICO

CURB FLASHING WITH PVC MEMBRANE

MAXIMUM WARRANTY: 30 YEARS

PVC/PVC KEE MEMBRANE
APPROVED SUBSTRATE
0 → SEE NOTE
PS (PRESSURE SENSITIVE)

TPC (Thermoplastic Common Details)

TPC-5.1

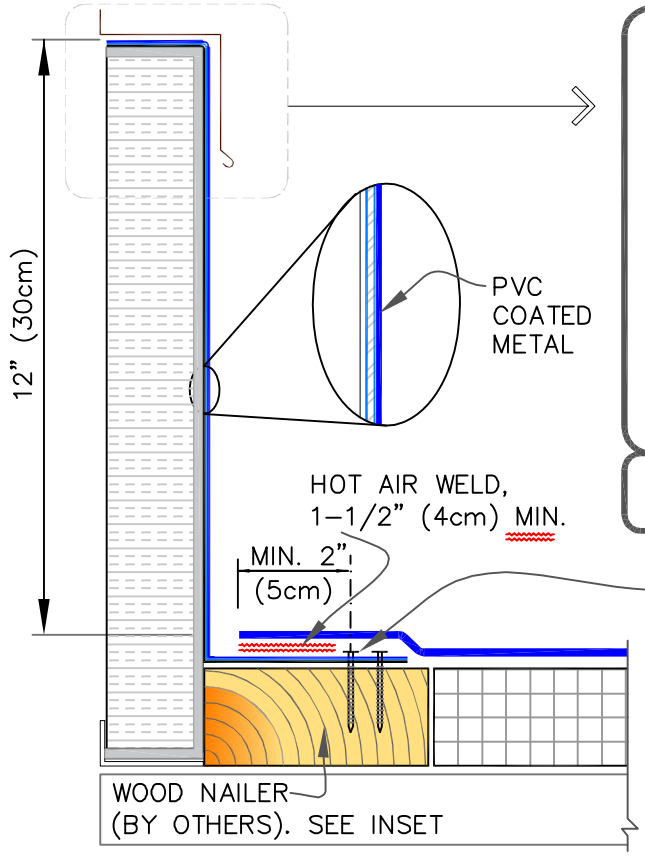

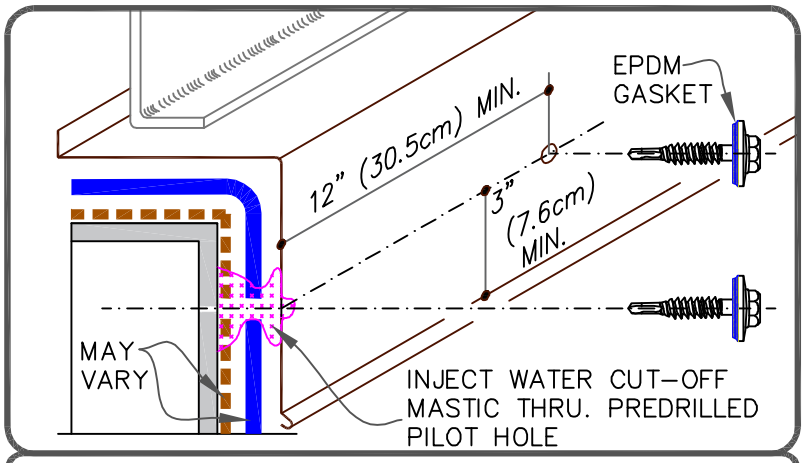

COUNTER FLASHING WITH WATERPROOF JOINERY & ATTACHMENT (BY OTHERS)

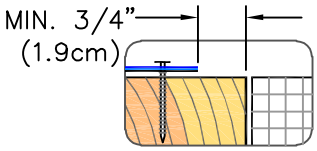

SEQUENCE:

1. 3" (7.6cm) REINFORCED MEMBRANE STRIPPING.
2. FIELD MEMBRANE.
3. TOP 6" (15.2cm) NON–REINFORCED MEMBRANE STRIPPING.

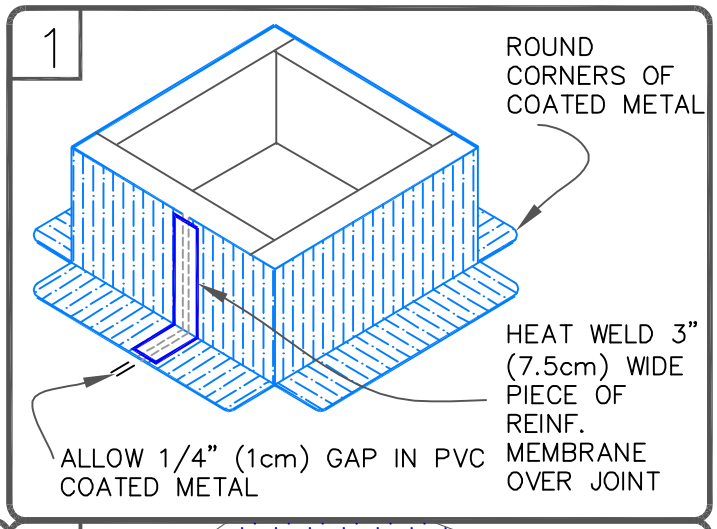

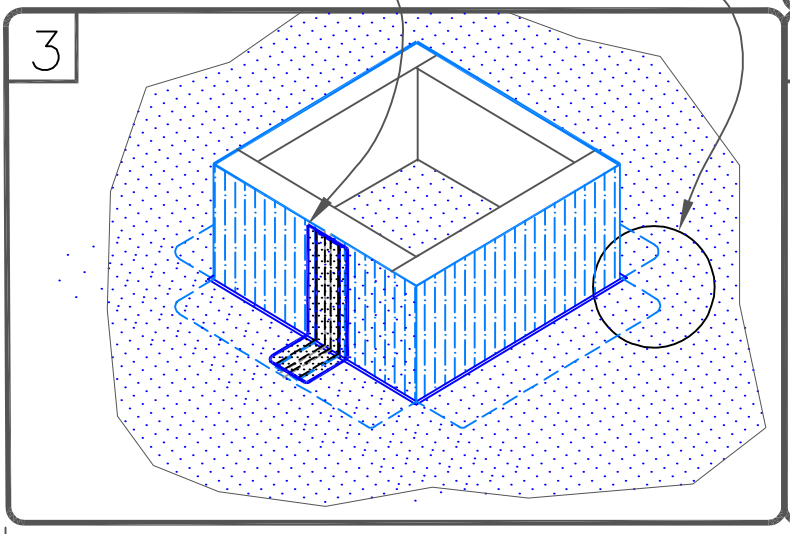

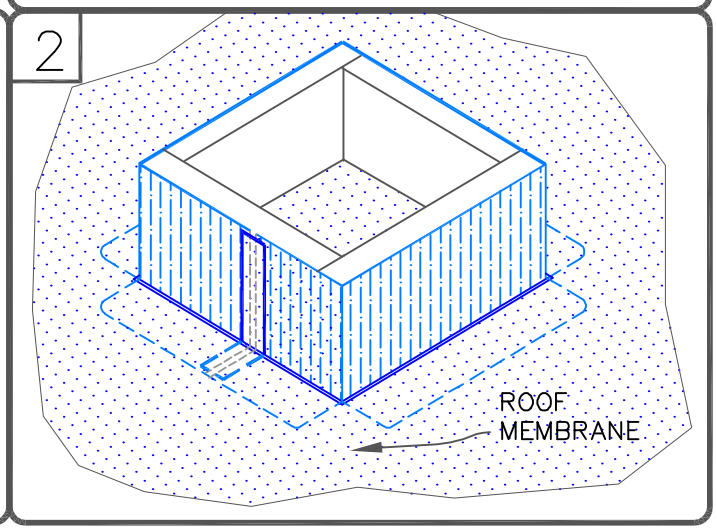

VERSICO ROOFING SYSTEMS

© 2024 VERSICO

CURB FLASHING WITH PVC COATED METAL

MAXIMUM WARRANTY: 30 YEARS

PVC/PVC KEE MEMBRANE
APPROVED SUBSTRATE
0 → SEE NOTE
PS (PRESSURE SENSITIVE)

TPC (Thermoplastic Common Details)

TPC–5.2

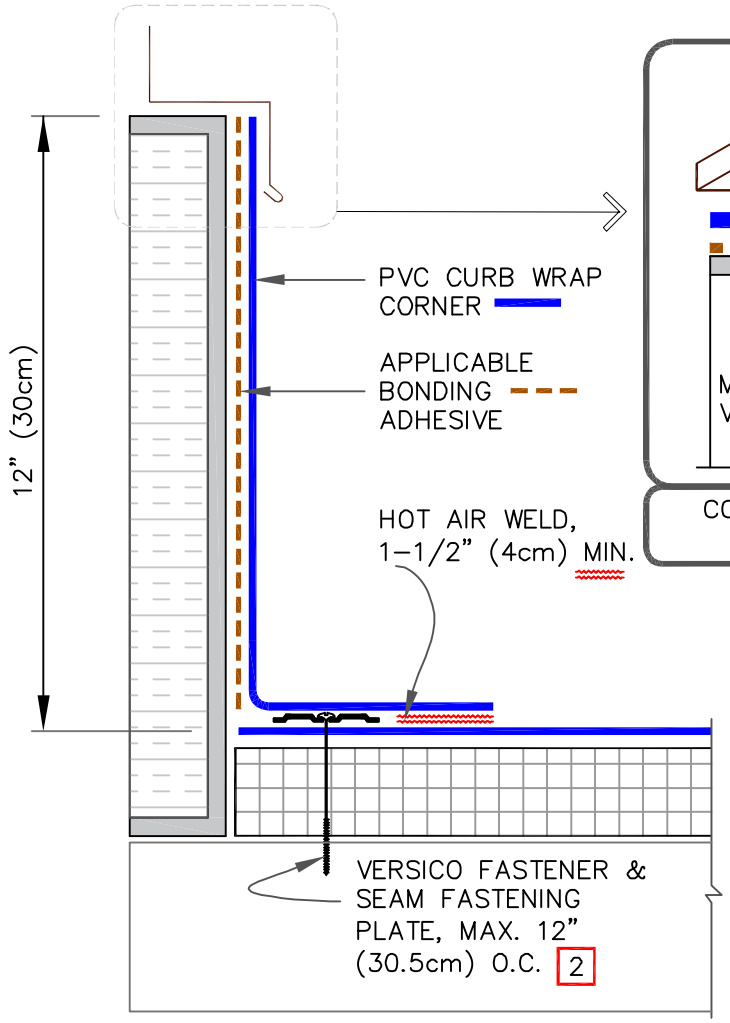

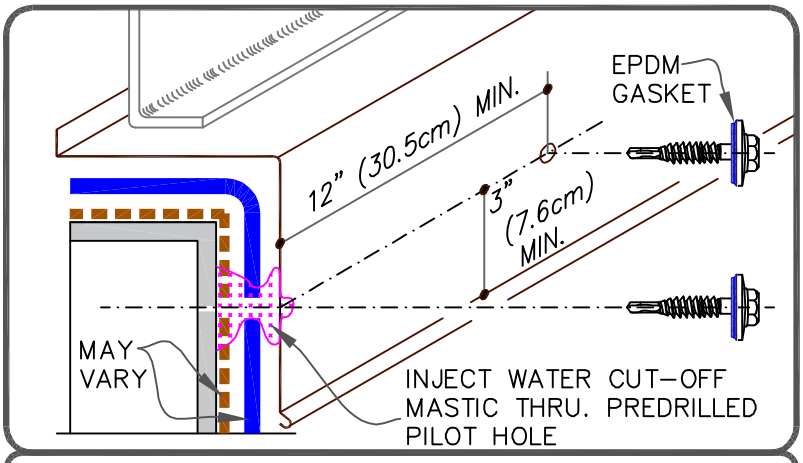

COUNTER FLASHING WITH WATERPROOF JOINERY & ATTACHMENT (BY OTHERS)

PVC ONLY (NOT KEE HP)
IN LIEU OF BONDING ADHESIVE, THE CURB FLASHING MAY BE INSTALLED IN CAV GRIP 3V.

NOTES:

1. FOUR CURB WRAP CORNERS WILL COMPLETELY FLASH A MAXIMUM CURB SIZE OF 3'X3' (91cmX 91cm). FOR LARGER CURBS USE THE PVC CURB WRAP CORNERS IN CONJUNCTION WITH ADDITIONAL SECTIONS OF PVC MEMBRANE.
2. REFER TO VERSICO SPECIFICATIONS FOR ACCEPTABLE VERSICO FASTENERS AND PLATES.
3. CUSTOM SIZES ARE AVAILABLE FOR CURB FLASHING HEIGHTS GREATER THAN 12" (30cm).

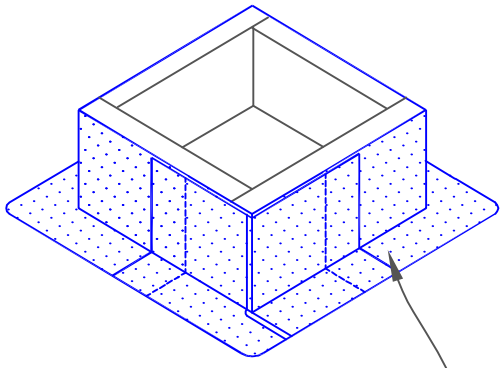

USE ONE PVC CURB WRAP CORNER AT EACH CORNER OF THE CURB. HOT AIR WELD ALL SEAMS IN ACCORDANCE WITH STANDARD SPLICING METHODS. 1

CFA (CERTIFIED FABRICATED ACCESSORIES)

VERSICO ROOFING SYSTEMS
© 2024 VERSICO

CURB FLASHING WITH CFA
PVC CURB WRAP CORNERS

MAXIMUM WARRANTY: 30 YEARS

PVC/PVC KEE MEMBRANE
APPROVED SUBSTRATE
0 → SEE NOTE
PS (PRESSURE SENSITIVE)

TPC (Thermoplastic Common Details)

TPC-5.3

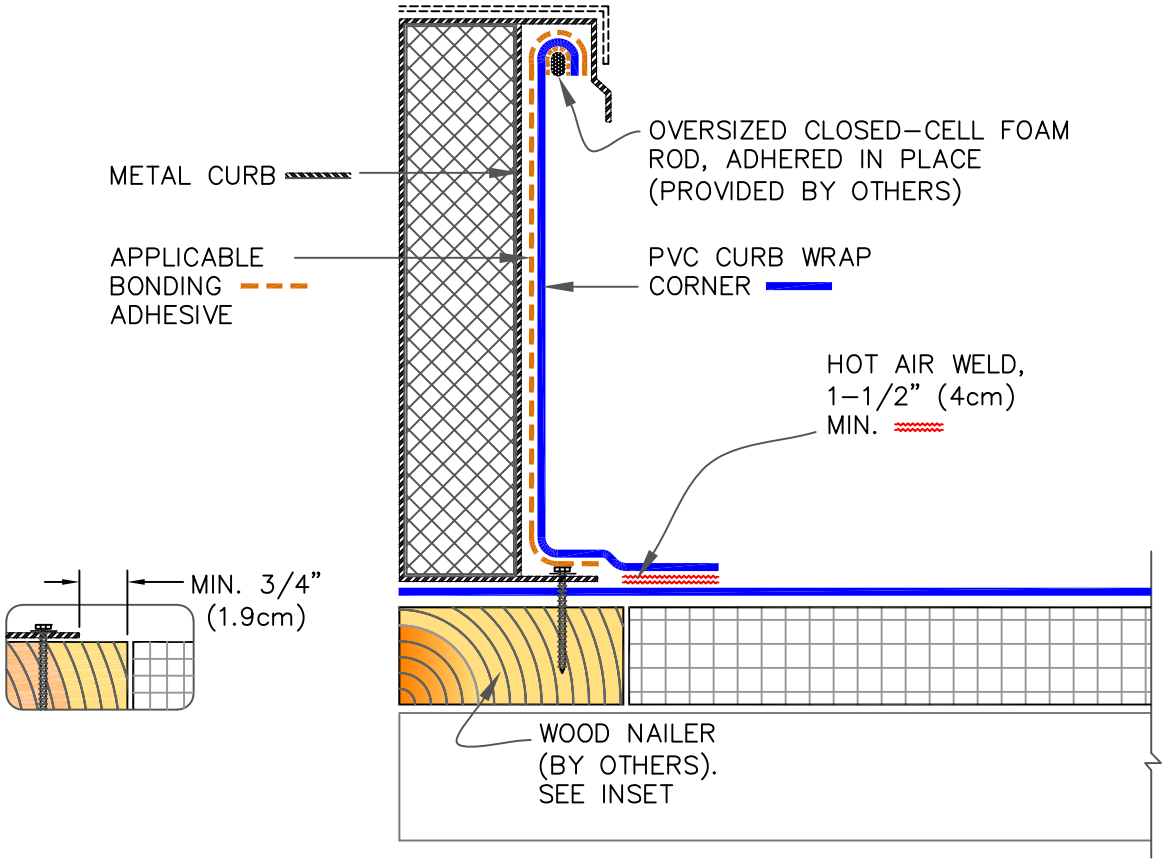

PVC ONLY (NOT KEE HP)
IN LIEU OF BONDING ADHESIVE, THE CURB FLASHING MAY BE INSTALLED IN CAV GRIP 3V.

NOTES:

1. FOUR (4) CURB WRAP CORNERS WILL COMPLETELY FLASH A MAXIMUM CURB SIZE OF 3'X3' (90cmX 90cm). FOR LARGER CURBS USE THE PVC CURB WRAP CORNERS IN CONJUNCTION WITH ADDITIONAL SECTIONS OF VERSIFLEX PVC.
2. IF CURB WRAP CORNER IS NOT USED, THEN USE DETAIL TPC–15.7 FOR OUTSIDE CORNERS.
3. REFER TO VERSICO SPECIFICATIONS FOR ACCEPTABLE VERSICO FASTENERS AND PLATES.
4. CUSTOM SIZES ARE AVAILABLE FOR CURB FLASHING HEIGHTS GREATER THAN 12" (30cm).

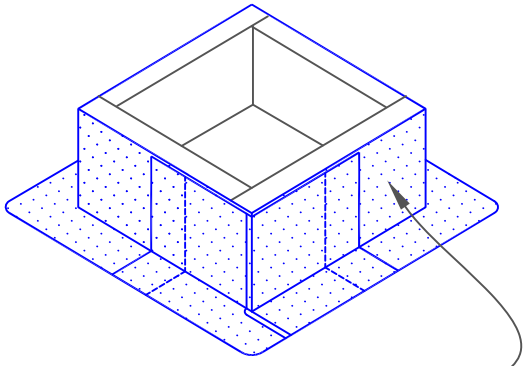

USE ONE PVC CURB WRAP CORNER AT EACH CORNER OF THE CURB. HOT AIR WELD ALL SEAMS IN ACCORDANCE WITH STANDARD SPLICING METHODS. 1

VERSICO ROOFING SYSTEMS
© 2024 VERSICO

SELF–FLASHING CURB WITH CFA PVC CURB WRAP CORNERS

MAXIMUM WARRANTY: 30 YEARS

→ PVC/PVC KEE MEMBRANE
→ APPROVED SUBSTRATE
0 → SEE NOTE
PS (PRESSURE SENSITIVE)

TPC (Thermoplastic Common Details)

TPC–5.4

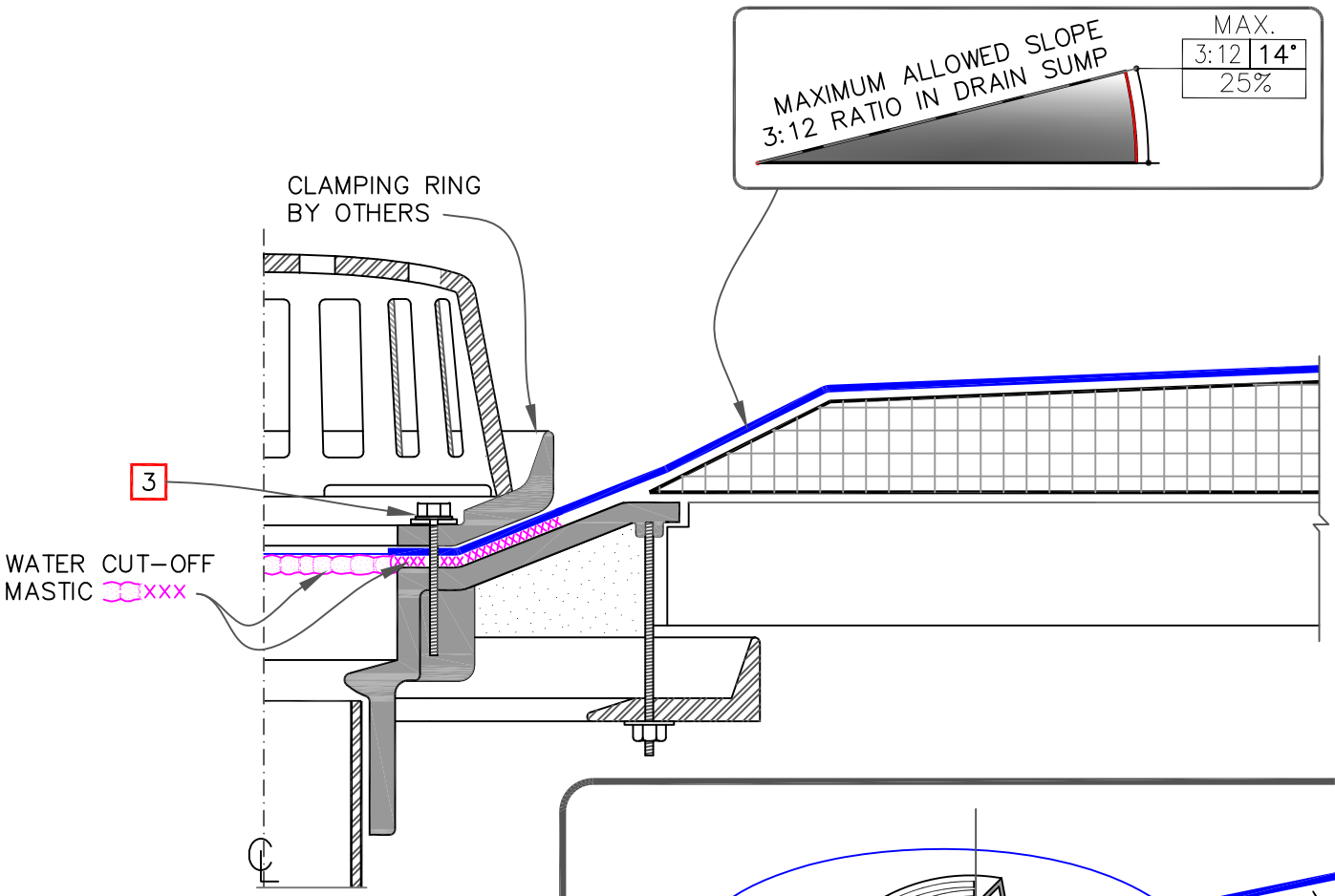

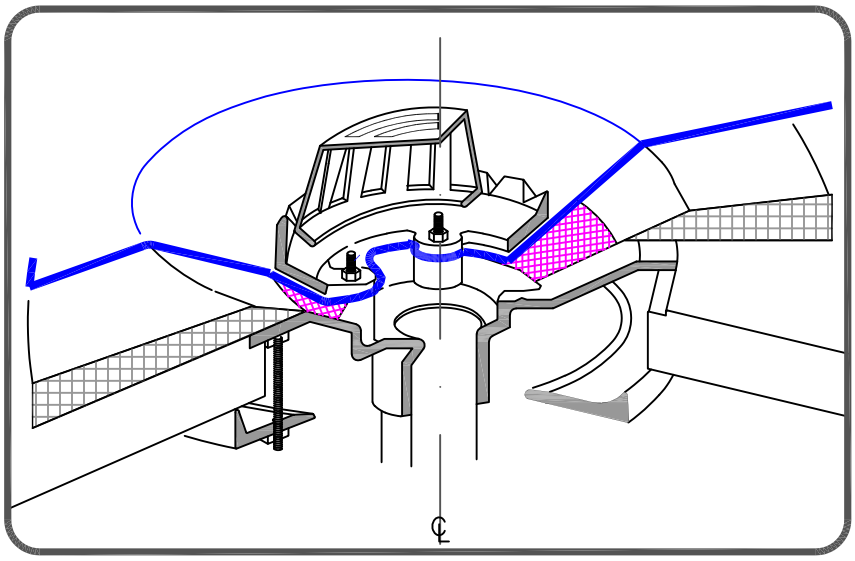

NOTES:

1. ROOF DRAIN SIZE AND NUMBER OF DRAINS SHALL BE IN ACCORDANCE WITH THE LOCAL CODES.

2. THE HOLE IN THE MEMBRANE SHALL EXCEED THE DIAMETER OF THE DRAIN PIPE, BUT SHALL BE NO LESS THAN 1/2" (1.5cm) FROM THE ATTACHMENT POINTS OF THE DRAIN CLAMPING RING.

3. ALL BOLTS OR CLAMPS MUST BE IN PLACE TO PROVIDE CONSTANT COMPRESSION ON WATER CUT-OFF MASTIC.

4. REMOVE EXISTING LEAD, FLASHING MATERIAL & ENSURE THE DRAIN RING IS COMPLETELY CLEAN DOWN TO BARE METAL.

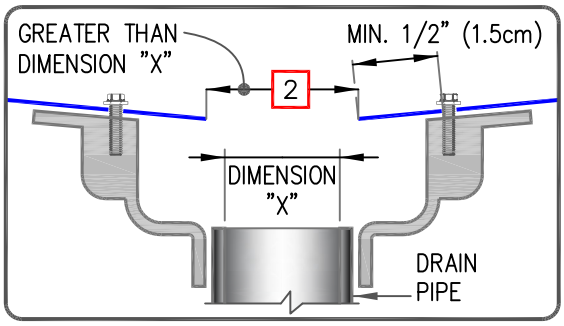

VERSICO ROOFING SYSTEMS
© 2024 VERSICO

ROOF DRAIN: SUMP SLOPE LESS THAN 3" TO ONE HORIZONTAL FOOT

MAXIMUM WARRANTY: 30 YEARS

→ PVC/PVC KEE MEMBRANE
→ APPROVED SUBSTRATE
0 → SEE NOTE
PS (PRESSURE SENSITIVE)

TPC (Thermoplastic Common Details)

TPC-6.1

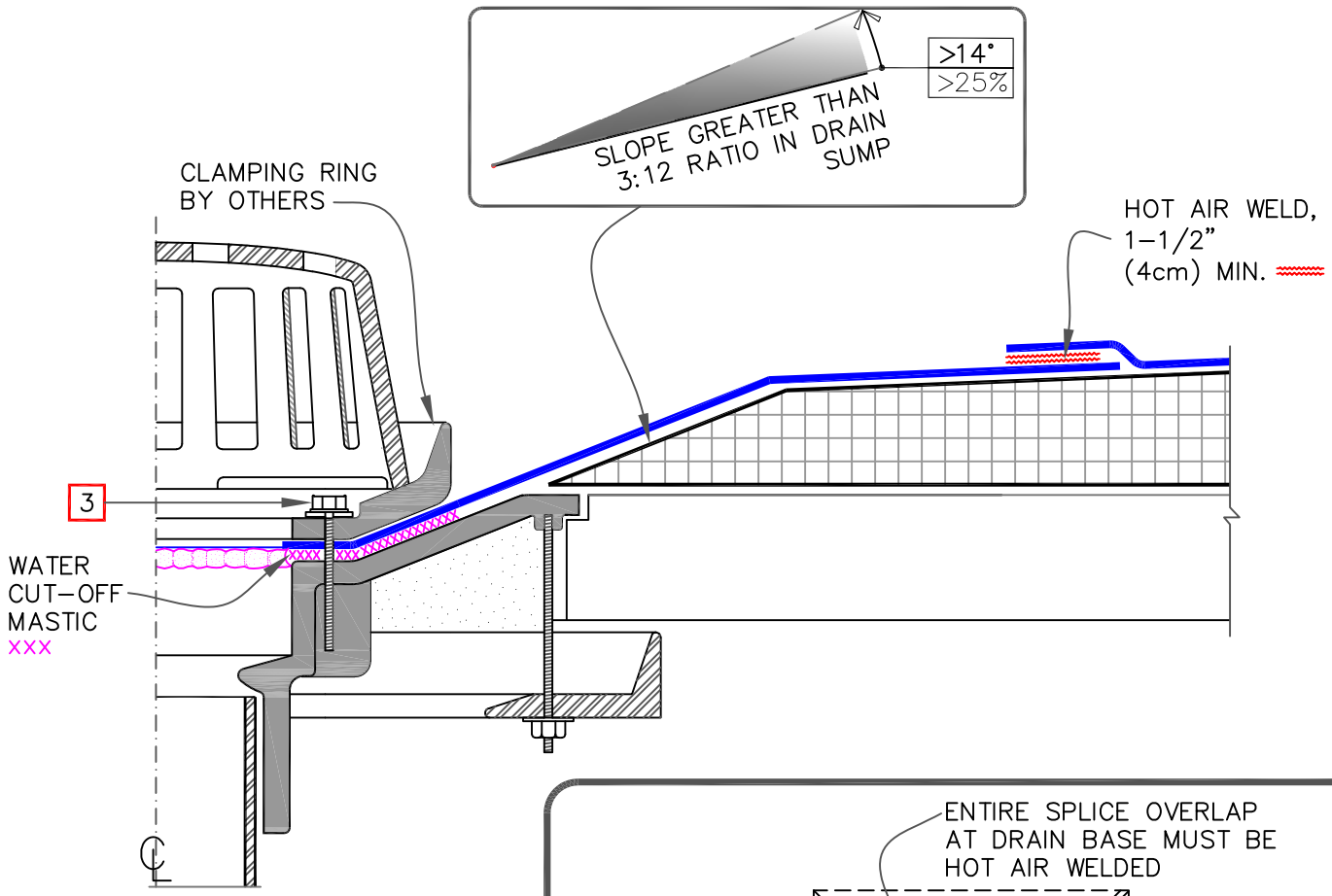

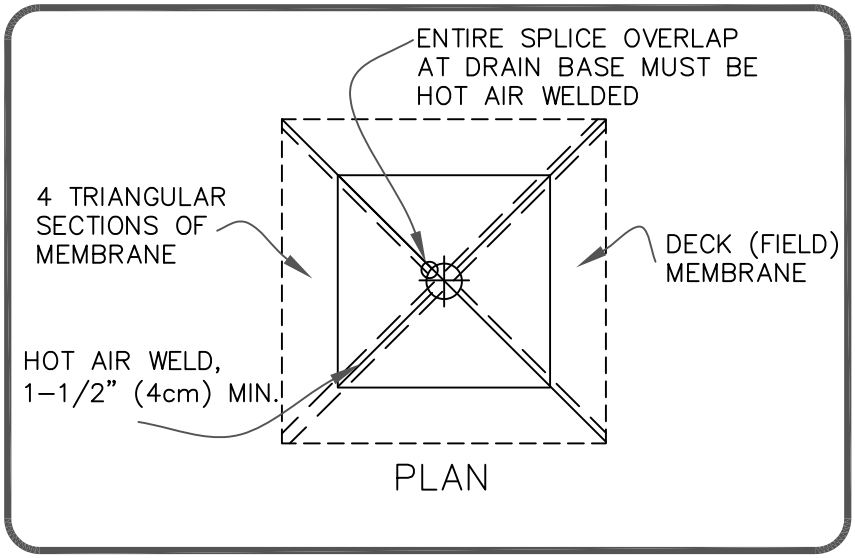

NOTES:

1. ROOF DRAIN SIZE AND NUMBER OF DRAINS SHALL BE IN ACCORDANCE WITH THE LOCAL CODES.

2. THE HOLE IN THE MEMBRANE SHALL EXCEED THE DIAMETER OF THE DRAIN PIPE, BUT SHALL BE NO LESS THAN 1/2" (1.5cm) FROM THE ATTACHMENT POINTS OF THE DRAIN CLAMPING RING.

3. ALL BOLTS OR CLAMPS MUST BE IN PLACE TO PROVIDE CONSTANT COMPRESSION ON WATER CUT-OFF MASTIC.

4. REMOVE EXISTING LEAD, FLASHING MATERIAL & ENSURE THE DRAIN RING IS COMPLETELY CLEAN DOWN TO BARE METAL.

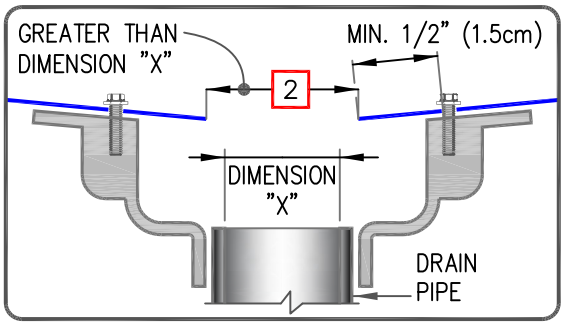

VERSICO ROOFING SYSTEMS
© 2024 VERSICO

ROOF DRAIN: SUMP SLOPE GREATER THAN 3" TO ONE HORIZONTAL FOOT OPTION 1

MAXIMUM WARRANTY: 30 YEARS

→ PVC/PVC KEE MEMBRANE
→ APPROVED SUBSTRATE
0 → SEE NOTE
PS (PRESSURE SENSITIVE)

TPC (Thermoplastic Common Details)

TPC-6.2

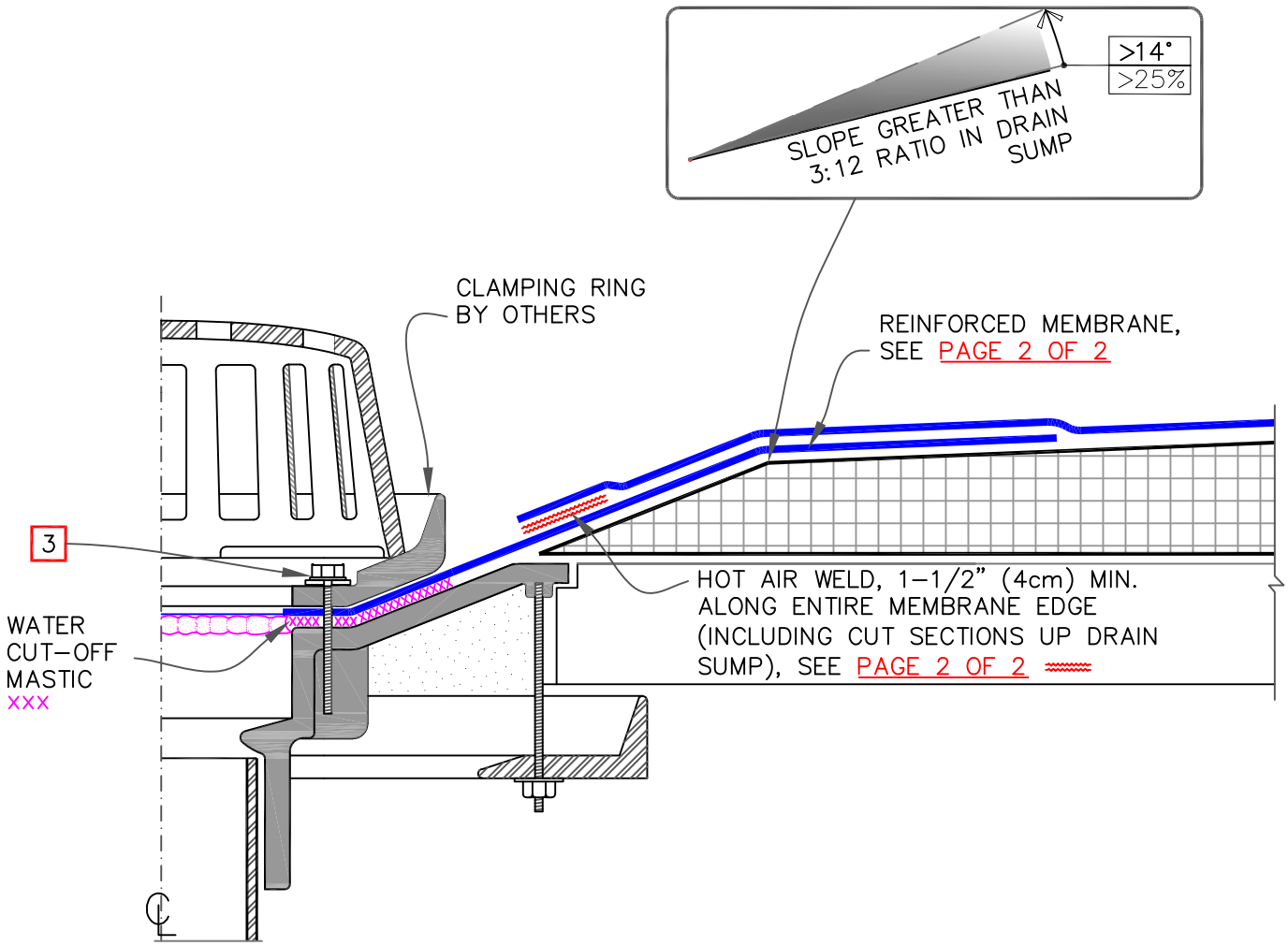

NOTES:

1. ROOF DRAIN SIZE AND NUMBER OF DRAINS SHALL BE IN ACCORDANCE WITH THE LOCAL CODES.

2. THE HOLE IN THE MEMBRANE SHALL EXCEED THE DIAMETER OF THE DRAIN PIPE, BUT SHALL BE NO LESS THAN 1/2" (1.5cm) FROM THE ATTACHMENT POINTS OF THE DRAIN CLAMPING RING.

3. ALL BOLTS OR CLAMPS MUST BE IN PLACE TO PROVIDE CONSTANT COMPRESSION ON WATER CUT-OFF MASTIC.

4. REMOVE EXISTING LEAD, FLASHING MATERIAL & ENSURE THE DRAIN RING IS COMPLETELY CLEAN DOWN TO BARE METAL.

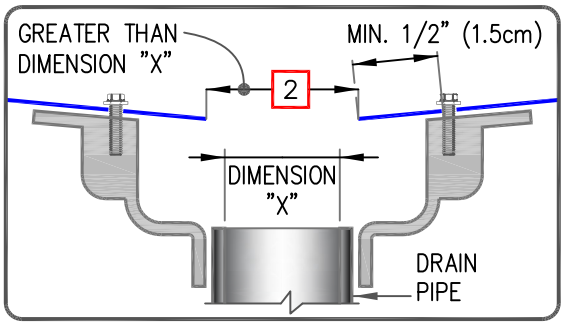

VERSICO ROOFING SYSTEMS
© 2024 VERSICO

ROOF DRAIN: SUMP SLOPE GREATER THAN 3" TO ONE HORIZONTAL FOOT OPTION 2 (PAGE 1 OF 2)

MAXIMUM WARRANTY: 30 YEARS

→ PVC/PVC KEE MEMBRANE
→ APPROVED SUBSTRATE
0 → SEE NOTE
PS (PRESSURE SENSITIVE)

TPC (Thermoplastic Common Details)

TPC-6.3

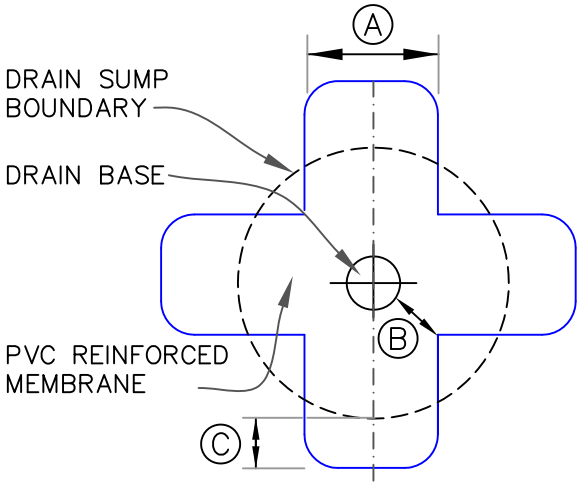

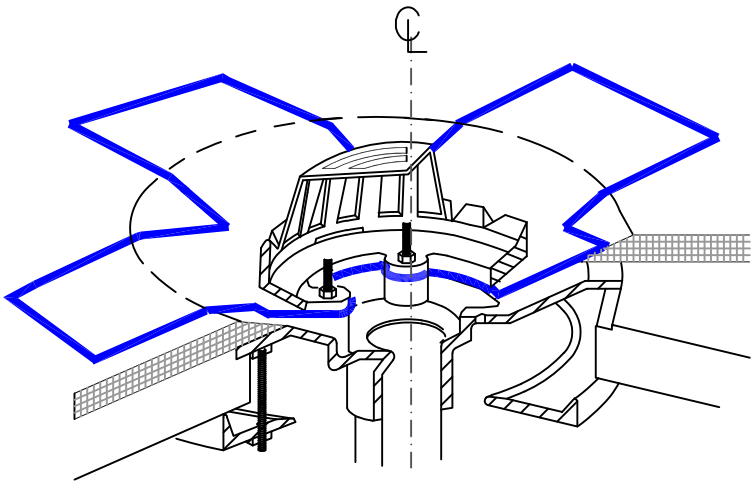

EXTEND PVC MEMBRANE ONTO MEMBRANE SECTION POSITIONED AT DRAIN SUMP AND CUT AS SHOWN TO LAY FLAT IN SUMP. HOT AIR WELD A MINIMUM OF 1–1/2" (4cm) COMPLETELY SURROUNDING AREA.

CUT SECTION OF PVC REINFORCED MEMBRANE AS SHOWN AND POSITION INTO DRAIN SUMP. EXTEND MEMBRANE OUT OF DRAIN SUMP APPROXIMATELY 6" (15cm) (ROUND CORNERS).

DIMENSIONS		cm	
A	12"	30	MIN.
B	6"	15	MIN.
C	6"	15	APPROX.
D	3"	7.5	MIN.

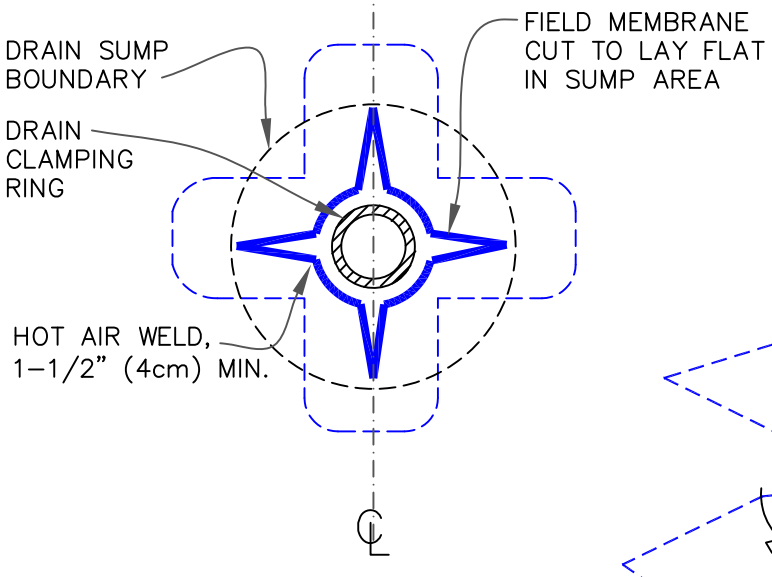

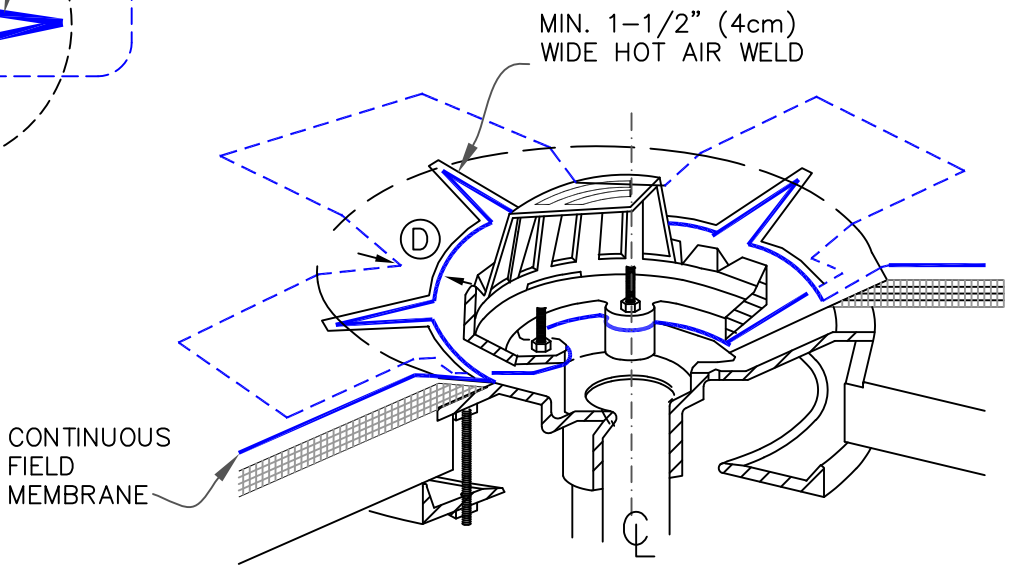

VERSICO ROOFING SYSTEMS
© 2024 VERSICO

ROOF DRAIN: SUMP SLOPE GREATER THAN 3" TO ONE HORIZONTAL FOOT OPTION 2 (PAGE 2 OF 2)

MAXIMUM WARRANTY: 30 YEARS

PVC/PVC KEE MEMBRANE
APPROVED SUBSTRATE
0 SEE NOTE
PS (PRESSURE SENSITIVE)

TPC (Thermoplastic Common Details)

TPC–6.3

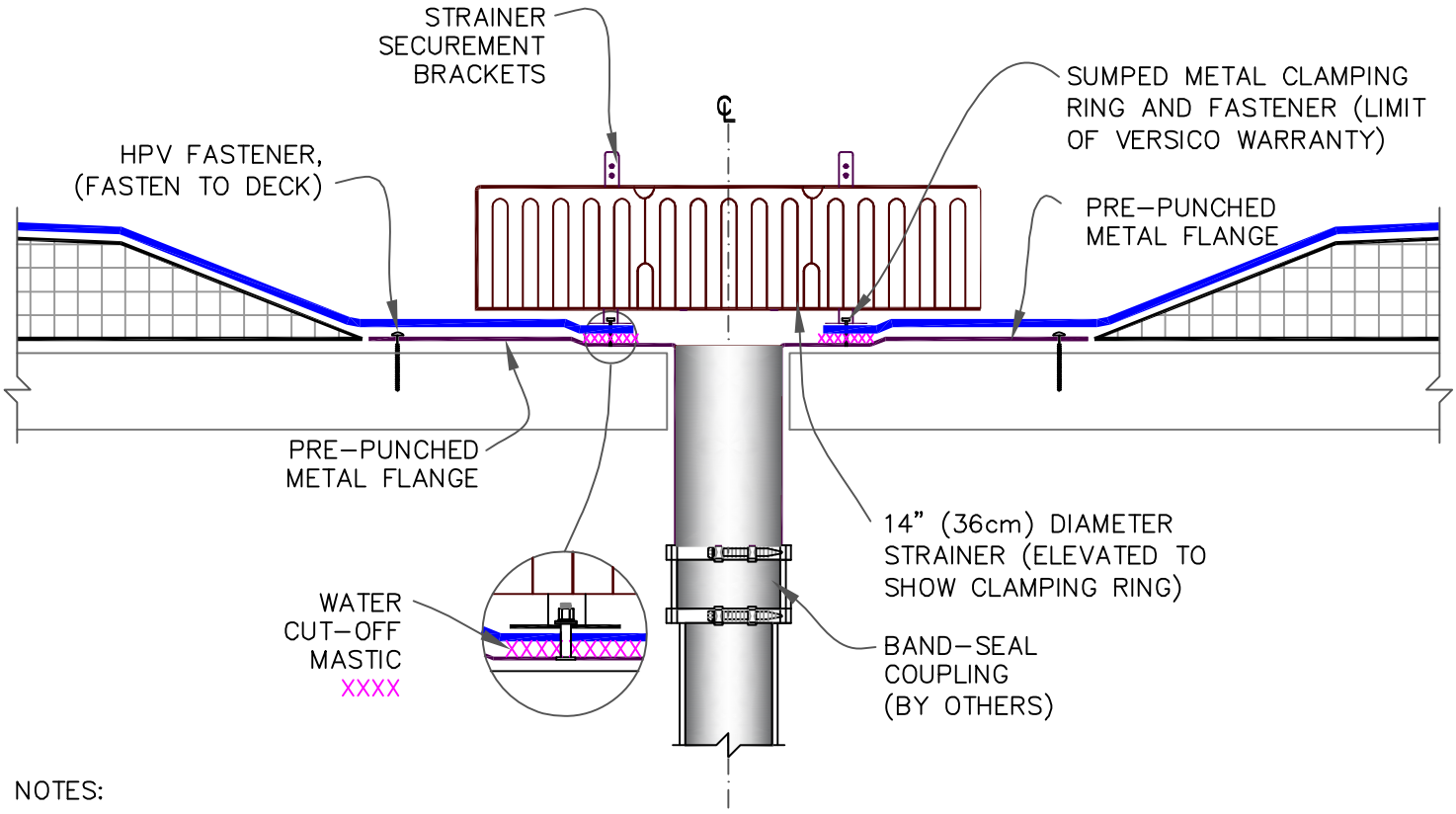

NOTES:

1. ROOF DRAIN SIZE AND NUMBER OF DRAINS SHALL BE IN ACCORDANCE WITH THE LOCAL CODES.

2. ALL BOLTS OR CLAMPS MUST BE IN PLACE TO PROVIDE CONSTANT COMPRESSION ON WATER CUT-OFF MASTIC.

3. THE HOLE IN THE MEMBRANE SHALL EXCEED THE DIAMETER OF THE DRAIN PIPE, BUT SHALL BE NO LESS THAN 1/2" (1.5cm) FROM THE ATTACHMENT POINTS OF THE DRAIN CLAMPING RING.

4. FIELD SPLICES MUST BE LOCATED AT LEAST 6" (15cm) OUTSIDE THE DRAIN SUMP.

5. INSULATION TAPER SHALL NOT BE GREATER THAN 6" (15cm) IN 12" (30cm) HORIZONTAL.

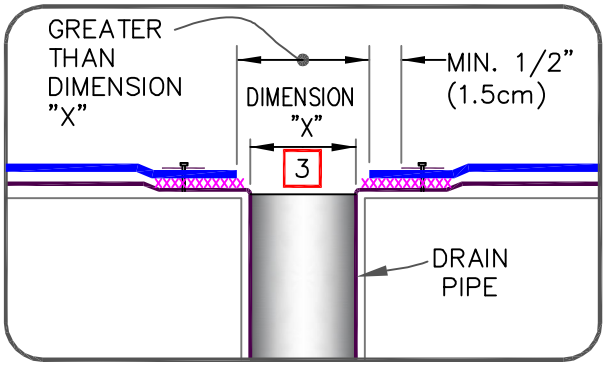

VERSICO ROOFING SYSTEMS
© 2024 VERSICO

ADD-ON DRAIN

MAXIMUM WARRANTY: 30 YEARS

PVC/PVC KEE MEMBRANE
APPROVED SUBSTRATE
0 SEE NOTE
PS (PRESSURE SENSITIVE)

TPC (Thermoplastic Common Details)

TPC-6.4

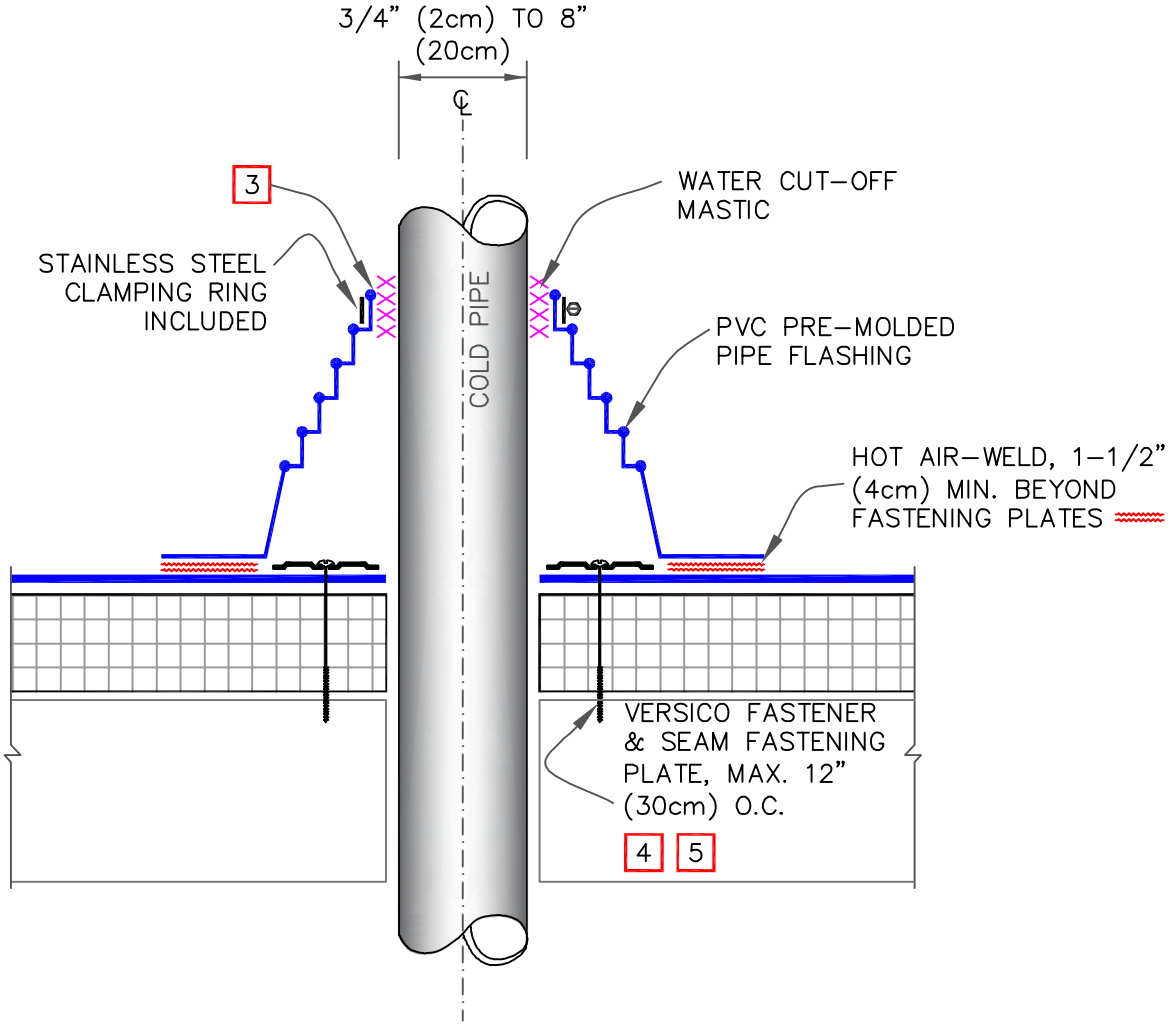

NOTES:

1. REMOVE ALL EXISTING LEAD AND FLASHING MATERIAL BEFORE INSTALLING PRE-MOLDED PIPE FLASHING.

2. TEMPERATURE OF THE PIPE PENETRATION MUST NOT EXCEED 140˚F (60˚C).

3. PRE-MOLDED PIPE FLASHING MUST HAVE INTACT RIB AT THE TOP EDGE REGARDLESS OF PIPE DIAMETER.

4. INSTALL A MINIMUM OF 4 FASTENERS AND PLATES AROUND THE PIPE, EQUALLY SPACED. IF FASTENERS AND PLATES CANNOT BE INSTALLED AS SHOWN, THEY MAY ALSO BE POSITIONED OUTSIDE THE PIPE MAXIMUM 12" (30cm) O.C. AND FLASHED WITH PVC REINFORCED MEMBRANE / PVC CUT-EDGE SEALANT. REFER TO DETAIL TPC-8.2.

5. FASTENERS AND PLATES ARE NOT REQUIRED ON ADHERED SYSTEMS UNLESS PIPE DIAMETER EXCEEDS 18" (46cm).

FASTENER TYPES ON MECHANICALLY ATTACHED ROOF ASSEMBLY

DECK TYPE	OPTION	FASTENER	PLATE
STEEL OR WOOD	A	HPVX	HPVX
	B	HPV-XL	HPV-XL
STRUCTURAL CONCRETE	A	CD-10	HPVX
	B	MP 14-10	HPVX

VERSICO ROOFING SYSTEMS
© 2024 VERSICO

PRE-MOLDED FLASHING

MAXIMUM WARRANTY: 30 YEARS

→ PVC/PVC KEE MEMBRANE
→ APPROVED SUBSTRATE
0 → SEE NOTE
PS (PRESSURE SENSITIVE)

TPC (Thermoplastic Common Details)

TPC-8.1

CAUTION

DETAIL NOT FOR USE ON 25 OR 30-YEAR WARRANTY PROJECTS, PRE-FABRICATED/PRE-MOLDED ACCESSORIES MUST BE UTILIZED. ACCEPTABLE PIPE FLASHINGS SHALL CONFORM WITH PVC UNIVERSAL DETAILS TPC-8.1, TPC-8.5

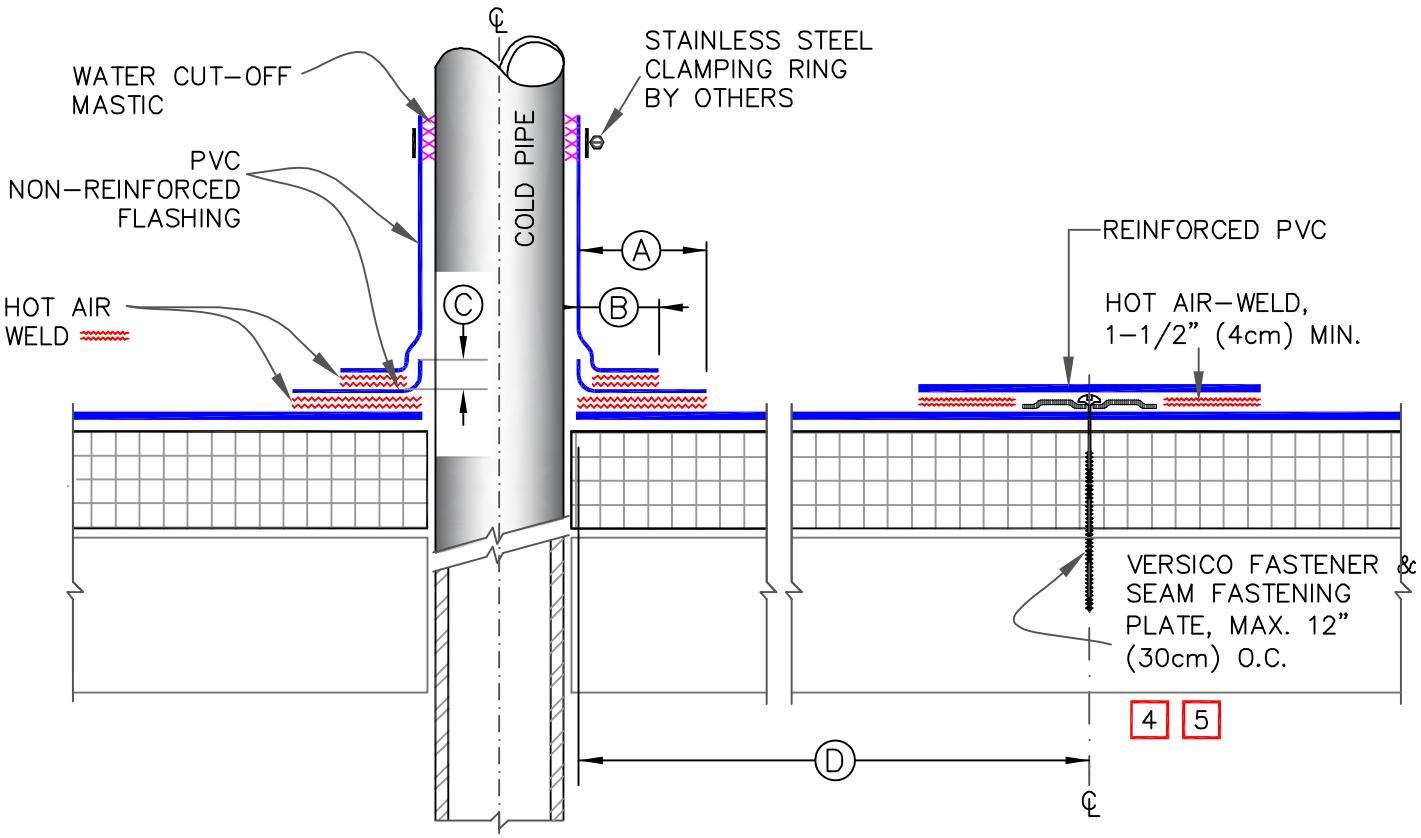

DIMENSIONS		cm	
A	1-1/2"	4	TO
	2"	5	
B	1"	2.5	MIN.
C	1/2"	1.5	MIN.
D	12"	30	APPROX.

NOTES:

1. REMOVE ALL EXISTING LEAD AND FLASHING MATERIAL BEFORE INSTALLING FIELD FABRICATED PIPE FLASHING.
2. TEMPERATURE OF THE PIPE PENETRATION MUST NOT EXCEED 140°F (60°C).
3. PVC NON-REINFORCED FLASHING WRAPPED AROUND PIPE SHALL HAVE MINIMUM 1-1/2" (4cm) VERTICAL HOT AIR WELD. INSTALL A MINIMUM OF 4 SEAM FASTENING PLATES FOR PIPES WITH A DIAMETER UP TO 6" (15cm). ADDITIONAL SEAM FASTENING PLATES WILL BE REQUIRED FOR PIPES GREATER THAN 6" (15cm) IN DIAMETER AND SHALL BE SPACED 12" (30cm) ON CENTER MAXIMUM.
4. FASTENERS/PLATES ARE NOT REQUIRED ON ADHERED SYSTEMS UNLESS PIPE DIAMETER EXCEEDS 18" (50cm).

FASTENER TYPES ON MECHANICALLY ATTACHED ROOF ASSEMBLY

DECK TYPE	OPTION	FASTENER	PLATE
STEEL OR WOOD	A	HPVX	HPVX
	B	HPV-XL	HPV-XL
STRUCTURAL CONCRETE	A	CD-10	HPVX
	B	MP 14-10	HPVX

VERSICO ROOFING SYSTEMS
© 2024 VERSICO

FIELD-FABRICATED PIPE FLASHING

MAXIMUM WARRANTY: SEE WARRANTY NOTE

PVC/PVC KEE MEMBRANE
APPROVED SUBSTRATE
0 → SEE NOTE
PS (PRESSURE SENSITIVE)

TPC (Thermoplastic Common Details)

TPC-8.2

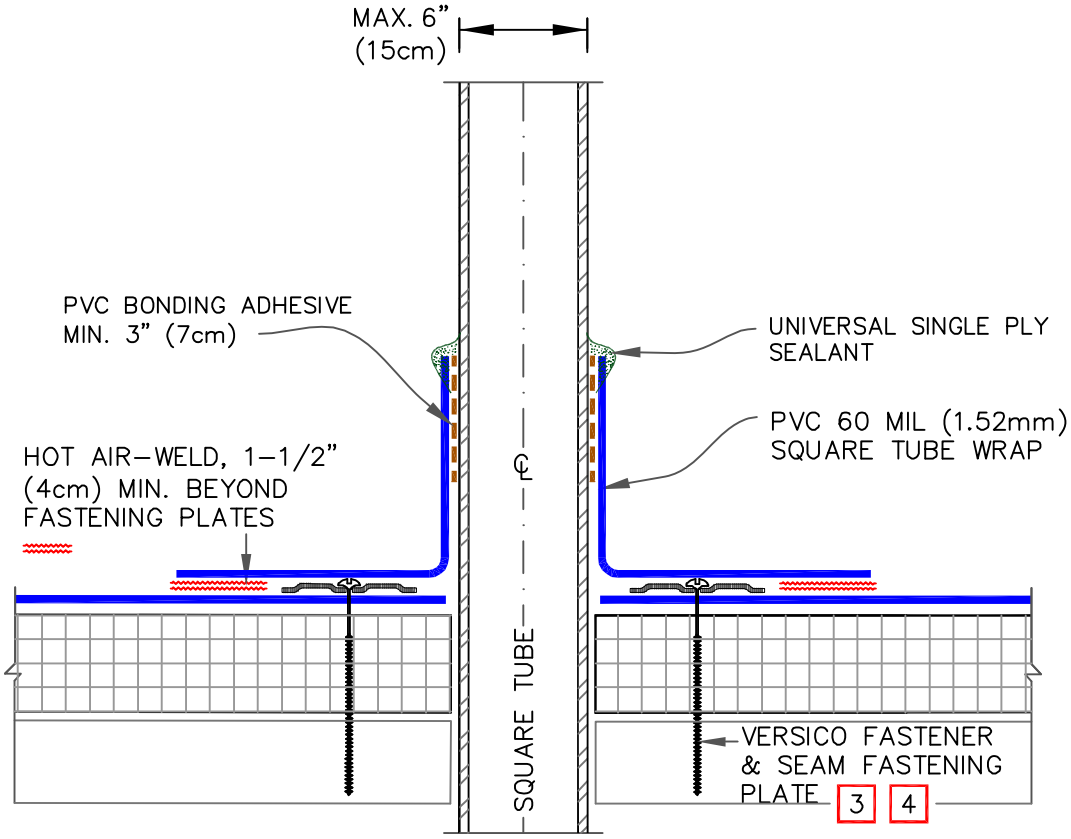

FASTENER TYPES ON MECHANICALLY ATTACHED ROOF ASSEMBLY

DECK TYPE	OPTION	FASTENER	PLATE
STEEL OR WOOD	A	HPVX	HPVX
	B	HPV–XL	HPV–XL
STRUCTURAL CONCRETE	A	CD–10	HPVX
	B	MP 14–10	HPVX

NOTES:

1. REMOVE ALL EXISTING LEAD AND FLASHING MATERIAL BEFORE INSTALLING PRE–FABRICATED SQUARE TUBE WRAP.
2. TEMPERATURE OF THE PIPE PENETRATION MUST NOT EXCEED 140˚F (60˚C).
3. INSTALL A MINIMUM OF 4 SEAM FASTENING PLATES FOR TUBE SIDE DIMENSIONS UP TO 6" (15cm).
4. FASTENERS AND PLATES ARE NOT REQUIRED ON ADHERED SYSTEM. SEE TABLE FOR MECHANICALLY FASTENED ROOF ASSEMBLY.

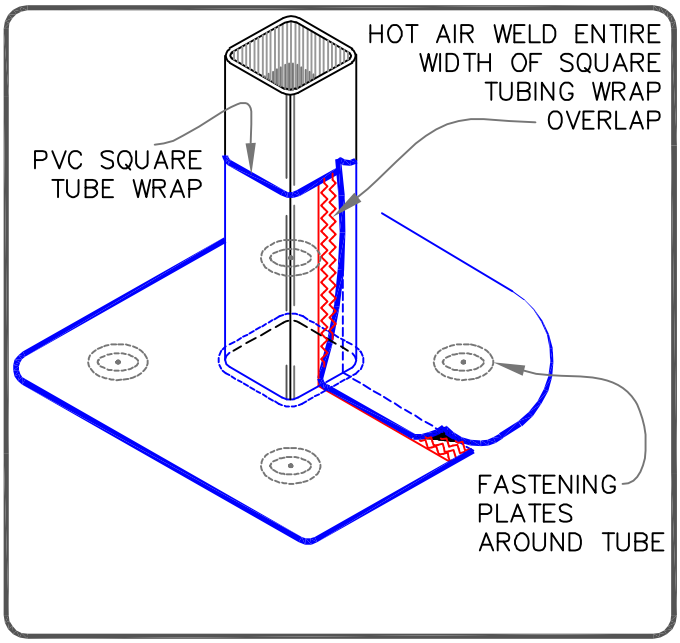

VERSICO ROOFING SYSTEMS
© 2024 VERSICO

CFA CERTIFIED
PRE–FABRICATED SQUARE
TUBE WRAP

MAXIMUM WARRANTY: 30 YEARS

PVC/PVC KEE MEMBRANE
APPROVED SUBSTRATE
0 SEE NOTE
PS (PRESSURE SENSITIVE)

TPC (Thermoplastic Common Details)

TPC–8.3

DIMENSIONS		cm	
A	6"	15	MAX.
B	1-1/2"	4	MIN.
C	1/2"	1.5	MIN.
D	1"	2.5	MIN.
E	12"	30	APPROX.

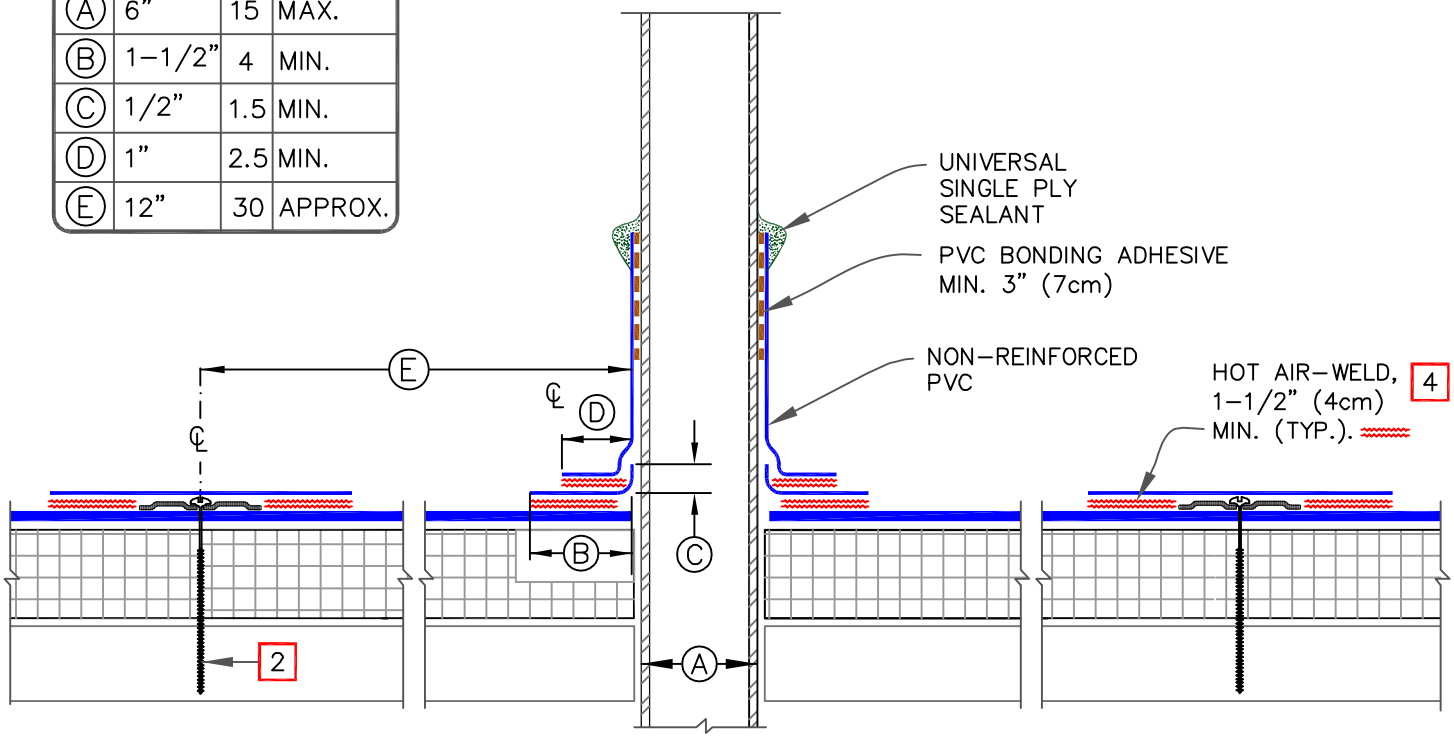

FASTENER TYPES ON MECHANICALLY ATTACHED ROOF ASSEMBLY

DECK TYPE	OPTION	FASTENER	PLATE
STEEL OR WOOD	A	HPVX	HPVX
	B	HPV-XL	HPV-XL
STRUCTURAL CONCRETE	A	CD-10	HPVX
	B	MP 14-10	HPVX

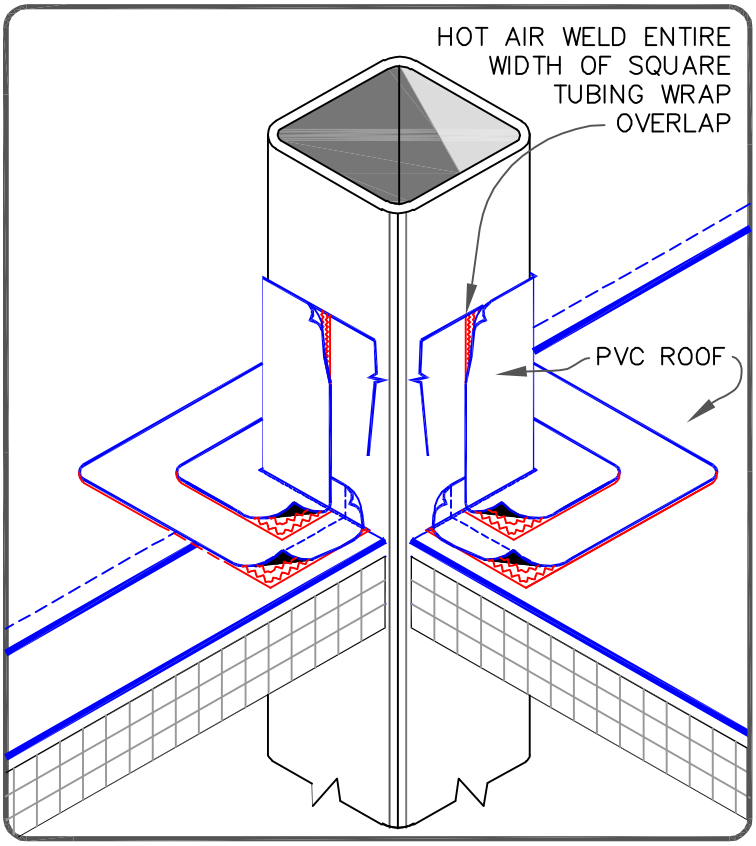

NOTES:

1. REMOVE ALL EXISTING LEAD AND FLASHING MATERIAL BEFORE INSTALLING PRE-FABRICATED SQUARE TUBE WRAP.
2. VERSICO FASTENERS & SEAM FASTENING PLATES FOR MECHANICALLY FASTENED SYSTEM (NOT REQUIRED ON ADHERED SYSTEM). SEE TABLE ABOVE.

VERSICO ROOFING SYSTEMS
© 2024 VERSICO

FIELD-FABRICATED SQUARE TUBE FLASHING

MAXIMUM WARRANTY: 20 YEARS

PVC/PVC KEE MEMBRANE
APPROVED SUBSTRATE
0 → SEE NOTE
PS (PRESSURE SENSITIVE)

TPC (Thermoplastic Common Details)

TPC-8.4

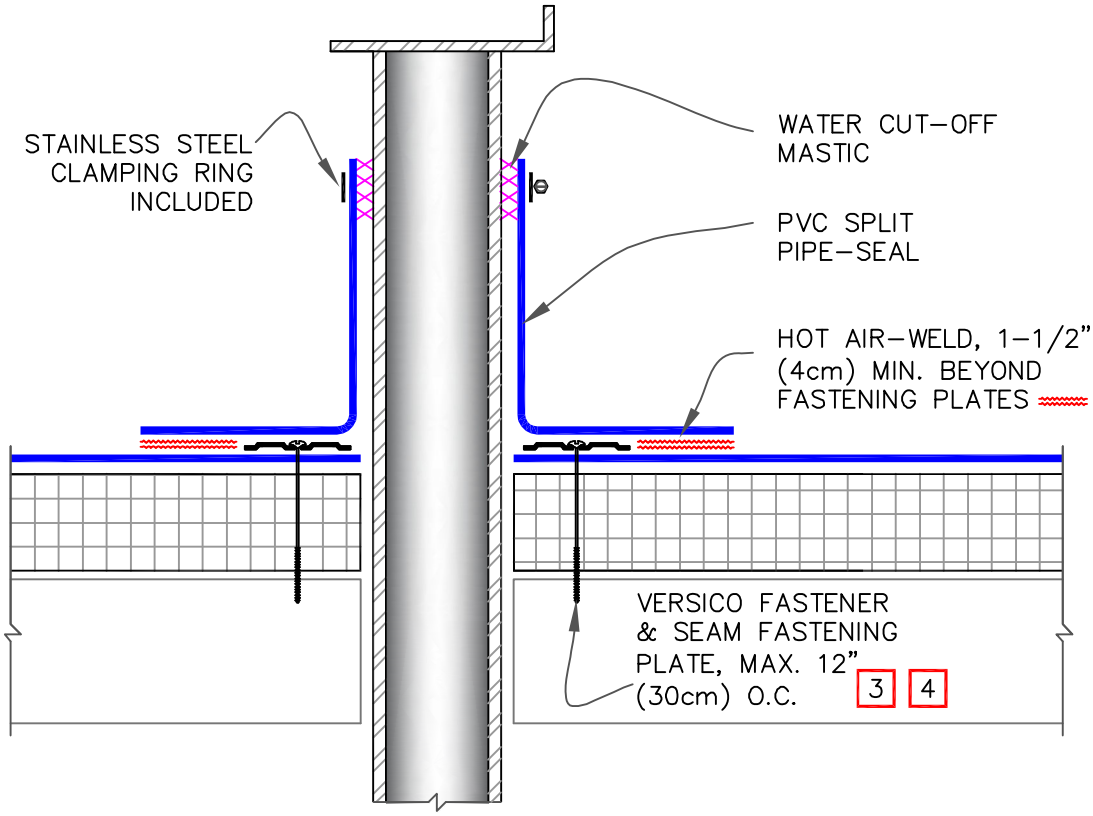

FASTENER TYPES ON MECHANICALLY ATTACHED ROOF ASSEMBLY

DECK TYPE	OPTION	FASTENER	PLATE
STEEL OR WOOD	A	HPVX	HPVX
	B	HPV–XL	HPV–XL
STRUCTURAL CONCRETE	A	CD–10	HPVX
	B	MP 14–10	HPVX

NOTES:

1. REMOVE ALL EXISTING LEAD AND FLASHING MATERIAL BEFORE INSTALLING SPLIT PIPE FLASHING.
2. TEMPERATURE OF THE PIPE PENETRATION MUST NOT EXCEED 140˚F (60˚C).
3. INSTALL A MINIMUM OF 4 FASTENERS AND PLATES AROUND THE PIPE, EQUALLY SPACED. IF FASTENERS AND PLATES CANNOT BE INSTALLED AS SHOWN, THEY MAY ALSO BE POSITIONED OUTSIDE THE PIPE MAXIMUM 12" (30cm) O.C. AND FLASHED WITH PVC REINFORCED MEMBRANE/CUT–EDGE SEALANT. REFER TO DETAIL TPC–8.2.
4. FASTENERS AND PLATES ARE NOT REQUIRED ON ADHERED SYSTEMS UNLESS PIPE DIAMETER EXCEEDS 18" (46cm).

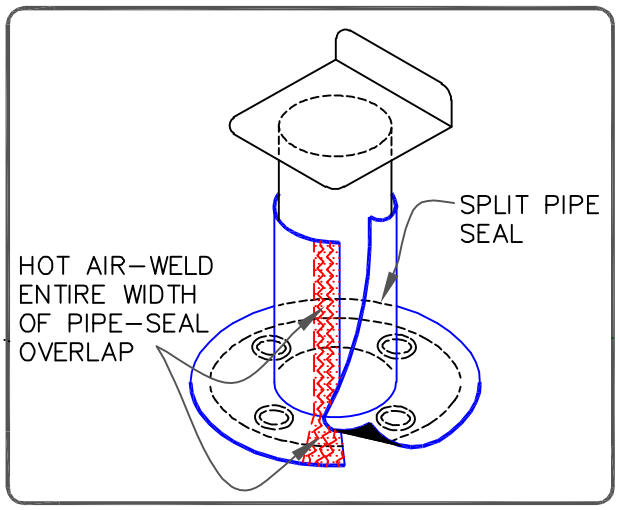

VERSICO ROOFING SYSTEMS
© 2024 VERSICO

CFA CERTIFIED PRE–FABRICATED SPLIT PIPE SEAL

MAXIMUM WARRANTY: 30 YEARS

→ PVC/PVC KEE MEMBRANE
→ APPROVED SUBSTRATE
0 → SEE NOTE
PS (PRESSURE SENSITIVE)

TPC (Thermoplastic Common Details)

TPC–8.5

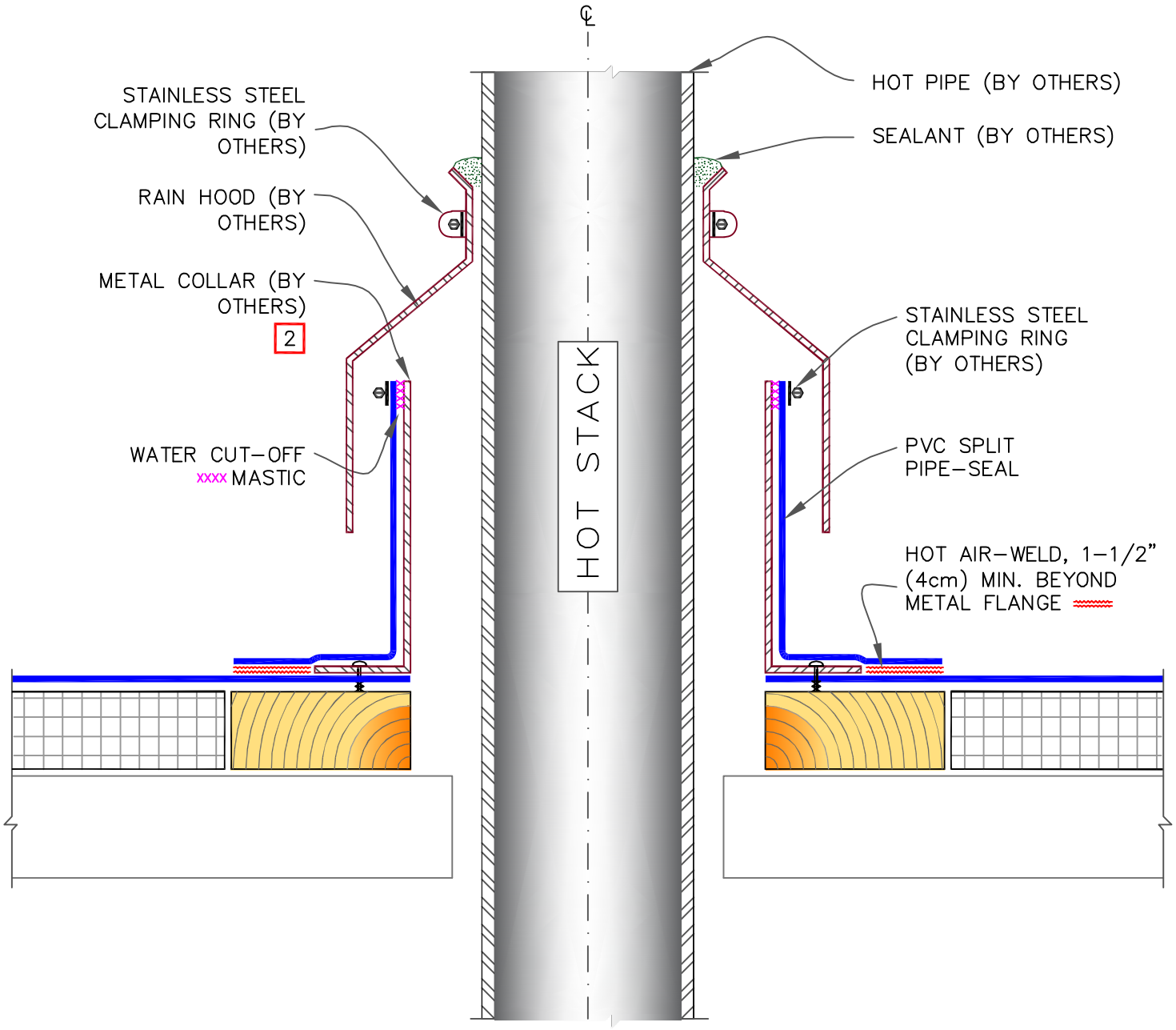

NOTES:

1. REMOVE ALL EXISTING LEAD AND FLASHING MATERIAL BEFORE INSTALLING PIPE FLASHING.
2. TEMPERATURE OF THE METAL COLLAR MUST NOT EXCEED 140°F (60°C).
3. ENSURE, NO HOT GASES OR STEAM LEAK OR INFILTRATE INTO ROOF ASSEMBLY.

VERSICO ROOFING SYSTEMS
© 2024 VERSICO

CFA CERTIFIED HOT PIPE FLASHING

MAXIMUM WARRANTY: 30 YEARS

PVC/PVC KEE MEMBRANE
APPROVED SUBSTRATE
0 → SEE NOTE
PS (PRESSURE SENSITIVE)

TPC (Thermoplastic Common Details)

TPC-8.6

9.1 MECHANICAL TERMINATION WITH COUNTER FLASHING

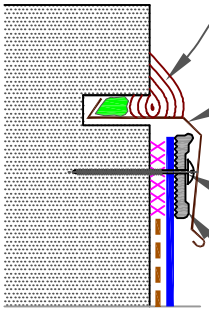

VERSICO UNIVERSAL SINGLE-PLY SEALANT OR SEALANT (BY OTHERS)

METAL COUNTER-FLASHING, WITH LEAD WEDGES AS REQUIRED (BY OTHERS)

THREADED FASTENERS OR VERSICO ZINC NAIL-IN ANCHOR

VERSICO TERMINATION BAR

WARRANTY UP TO 30 YEARS | **SEE INSET A**

9.2 MECHANICAL TERMINATION

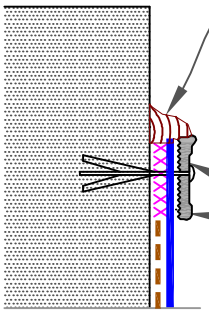

VERSICO UNIVERSAL SINGLE-PLY SEALANT OR SEALANT (BY OTHERS)

THREADED FASTENERS OR VERSICO ZINC NAIL-IN ANCHOR, RECOMMENDED AT 6" (15cm) O.C.

VERSICO TERMINATION BAR

WARRANTY UP TO 20 YEARS | **SEE INSET A**

INSET A

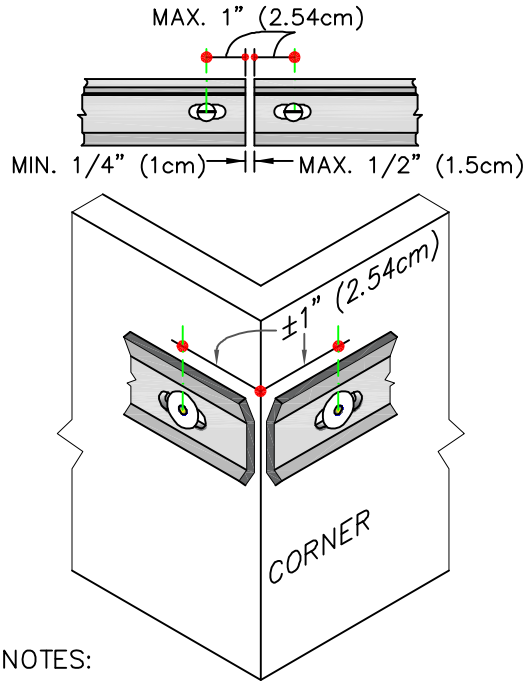

NOTES:

1. APPLY ON HARD SMOOTH SURFACE ONLY; NOT FOR USE ON EXPOSED WOOD.
2. DO NOT WRAP TERMINATION BAR AROUND CORNERS.
3. DETAIL 9.4 MUST BE USED AT VERTICAL JOINTS IN PANEL WALLS.

9.3 COUNTER FLASHING TERMINATION

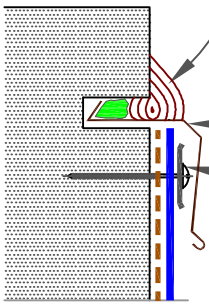

VERSICO UNIVERSAL SINGLE-PLY SEALANT OR SEALANT (BY OTHERS)

METAL COUNTER-FLASHING, WITH LEAD WEDGES AS REQUIRED (BY OTHERS)

FASTEN MEMBRANE @ 12" (30cm) O.C. MAX. USE GALVANIZED WASHERS, MIN. 1" (2.54cm) DIAMETER

NOTE:

1. WHEN MECHANICAL FASTENERS ARE USED TO PENETRATE THE METAL COUNTER-FLASHING, USE EPDM WASHERS, APPLY WATER CUT-OFF MASTIC UNDER THE COUNTER-FLASHING OR SEAL THE FASTENER HEADS.

WARRANTY UP TO 10 YEARS

APPLICABLE BONDING ADHESIVE

xxx WATER CUT-OFF MASTIC- MUST BE HELD UNDER CONSTANT COMPRESSION.

VERSICO ROOFING SYSTEMS

© 2024 VERSICO

MEMBRANE TERMINATIONS (PAGE 1 OF 3)

WARRANTY AS NOTED FOR EACH DETAIL

PVC/PVC KEE MEMBRANE
APPROVED SUBSTRATE
0 → SEE NOTE
PS (PRESSURE SENSITIVE)

TPC (Thermoplastic Common Details)

TPC-9

9.4 MECHANICAL TERMINATION AT VERTICAL JOINTS

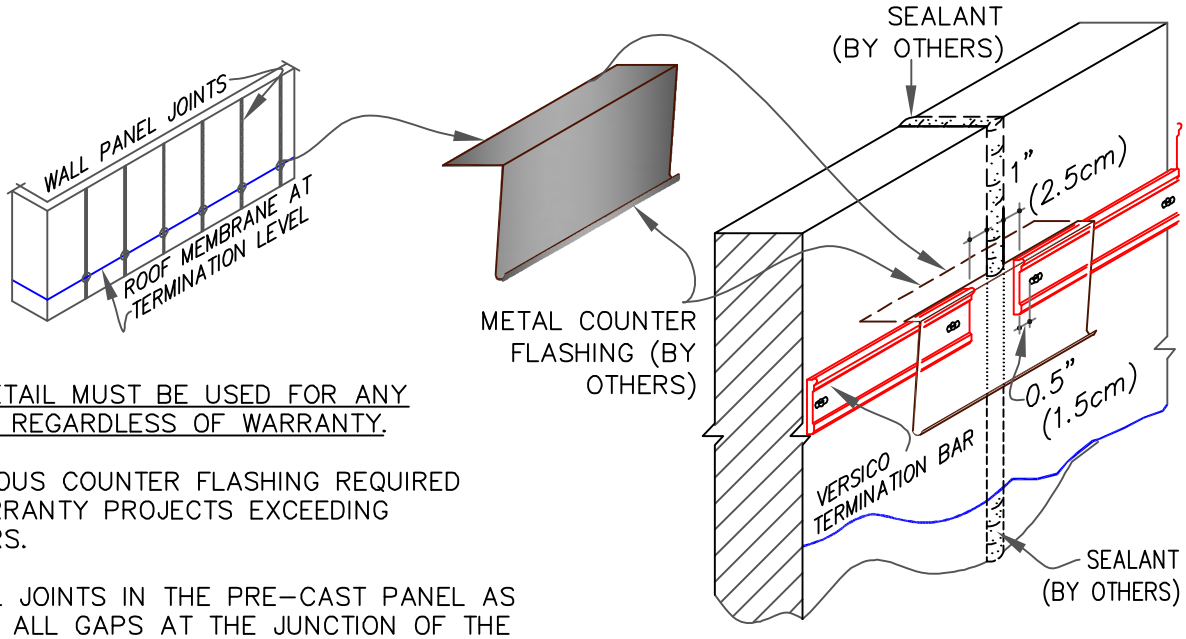

NOTES:

1. THIS DETAIL MUST BE USED FOR ANY PROJECT REGARDLESS OF WARRANTY.
2. CONTINUOUS COUNTER FLASHING REQUIRED FOR WARRANTY PROJECTS EXCEEDING 20-YEARS.
3. VERTICAL JOINTS IN THE PRE-CAST PANEL AS WELL AS ALL GAPS AT THE JUNCTION OF THE TILT-UP PANEL AND ROOF DECK MUST BE FULLY SEALED TO PREVENT AIR INFILTRATION.
4. APPLY ON HARD SMOOTH SURFACE ONLY.
5. THIS DETAIL MUST BE USED FOR ANY PROJECT REGARDLESS OF WARRANTY.

9.5 VERSITRIM 200 & 300 COPINGS

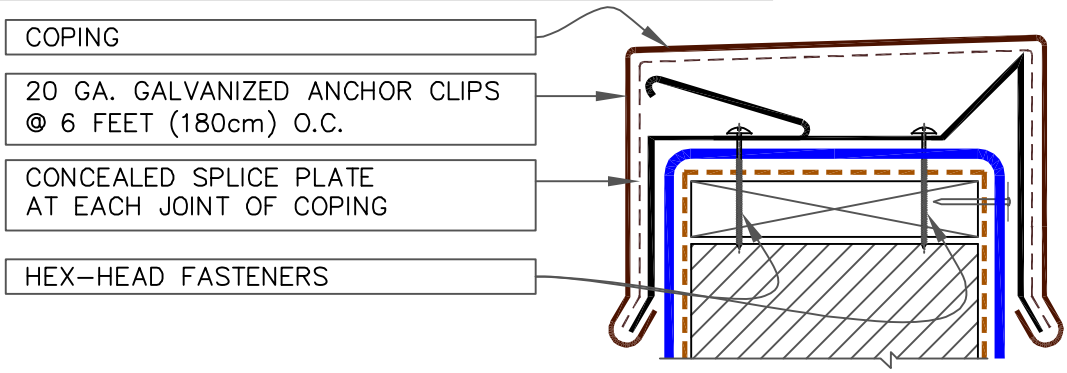

NOTES:

1. MEMBRANE MUST BE EXTENDED AT CORNERS TO PROVIDE COMPLETE COVERAGE OF THE TOP WALL SURFACE. REFER TO 3D DETAIL ON DETAIL 9.6.
2. REFER TO VERSITRIM COPING INSTALLATION INSTRUCTION MANUAL FOR STEP-BY-STEP INSTRUCTION PROCEDURES.

APPLICABLE BONDING ADHESIVE

xxx WATER CUT-OFF MASTIC- MUST BE HELD UNDER CONSTANT COMPRESSION.

© 2024 VERSICO

MEMBRANE TERMINATIONS (PAGE 2 OF 3)

WARRANTY AS NOTED FOR EACH DETAIL

PVC/PVC KEE MEMBRANE
APPROVED SUBSTRATE
0 SEE NOTE
PS (PRESSURE SENSITIVE)

TPC (Thermoplastic Common Details)

TPC-9

9.6 SHEET METAL COPING (BY OTHERS)

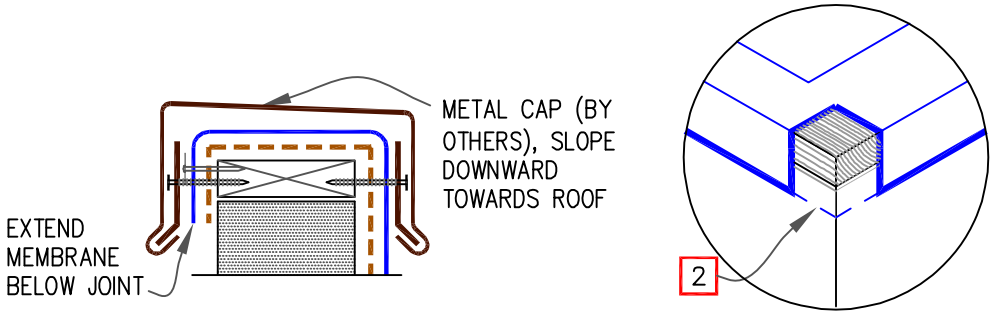

NOTES:

1. FOR VERSICO VERSITRIM COPING, REFER TO INSTALLATION INSTRUCTIONS PUBLISHED SEPARATELY.
2. MEMBRANE MUST BE EXTENDED TO CORNERS TO PROVIDE COMPLETE COVERAGE OF THE TOP WALL SURFACE.

9.7 MASONRY COPINGS (BY OTHERS)

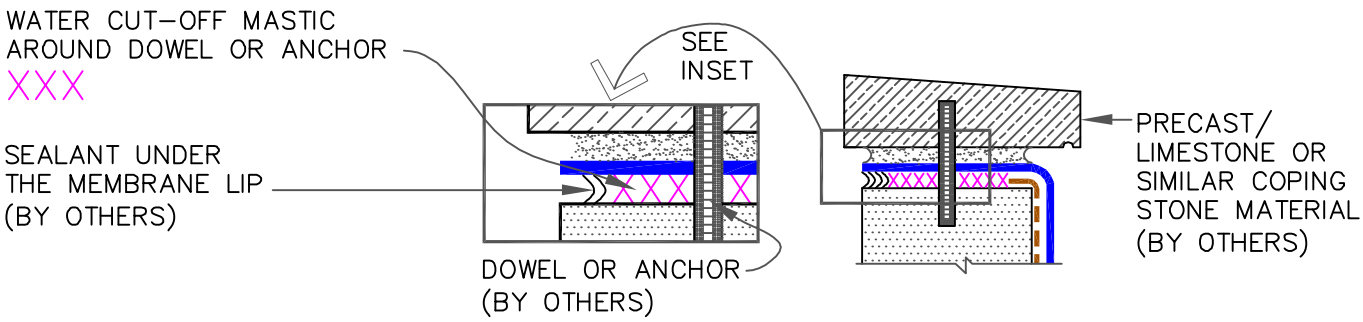

APPLICABLE BONDING ADHESIVE	xxx WATER CUT-OFF MASTIC- MUST BE HELD UNDER CONSTANT COMPRESSION.

VERSICO ROOFING SYSTEMS
© 2024 VERSICO

MEMBRANE TERMINATIONS (PAGE 3 OF 3)

MAXIMUM WARRANTY: 30 YEARS

PVC/PVC KEE MEMBRANE
APPROVED SUBSTRATE
0 → SEE NOTE
PS (PRESSURE SENSITIVE)

TPC (Thermoplastic Common Details)

TPC-9

CAUTION

FASTENERS AND PLATES ARE REQUIRED AT 6" (15cm) O.C. FOR ADHERED SYSTEMS WITH WARRANTY WIND SPEED COVERAGE GREATER THAN 90 MPH AND FOR ALL PROJECTS WITH WARRANTIES GREATER THAN 20 YEARS.

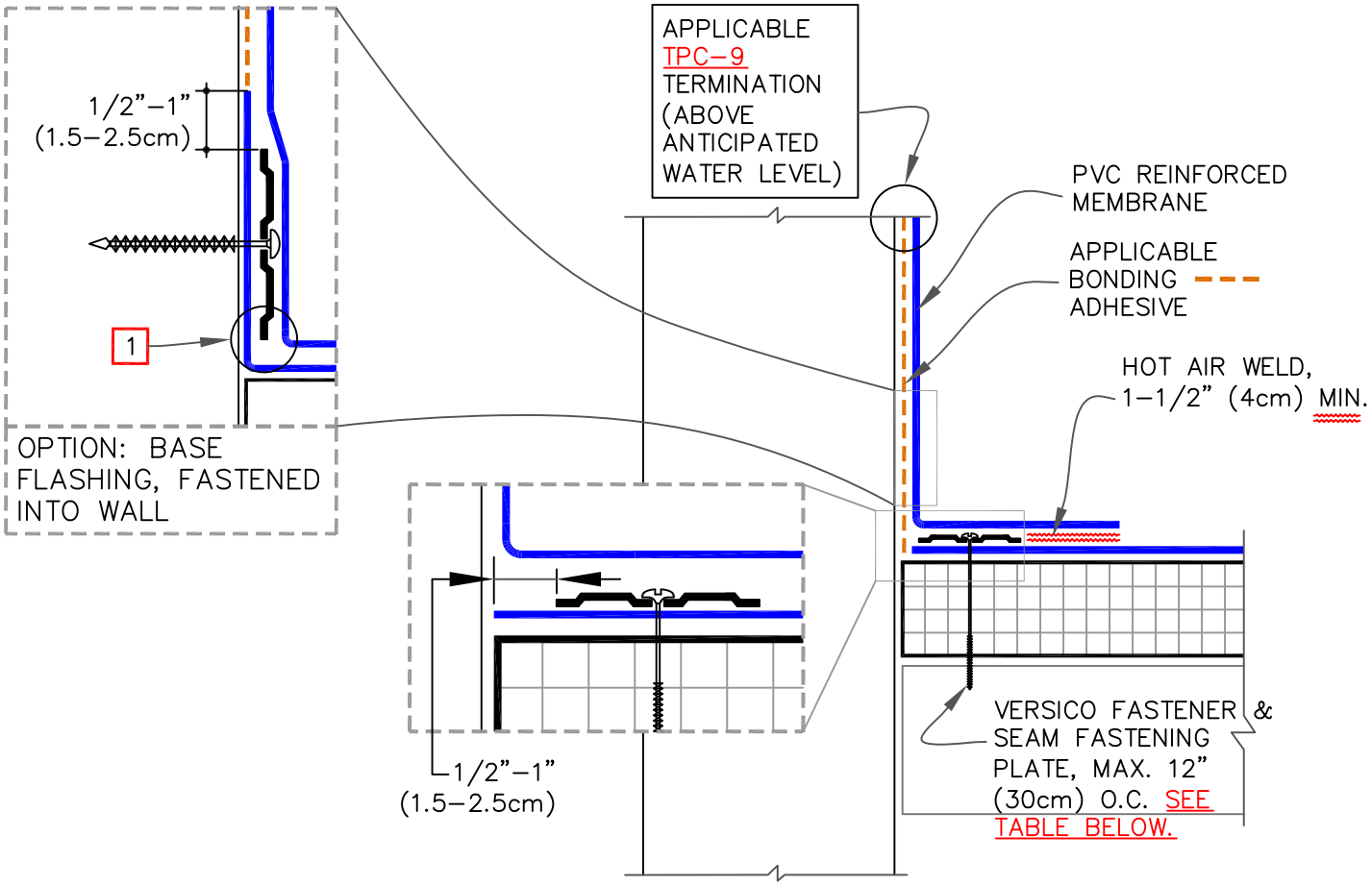

NOTE:

1. CARE MUST BE TAKEN TO PRESS THE MEMBRANE TIGHTLY INTO THE ANGLE CHANGE. PLACING THE PLATES TIGHT INTO THE ANGLE CHANGE WILL HELP HOLD THE MEMBRANE IN THE PROPER POSITION.

FASTENER TYPES ON MECHANICALLY ATTACHED ROOF ASSEMBLY

DECK TYPE	OPTION	FASTENER	PLATE
STEEL OR WOOD	A	HPVX	HPVX
	B	HPV–XL	HPV–XL
STRUCTURAL CONCRETE	A	CD–10	HPVX
	B	MP 14–10	HPVX

VERSICO ROOFING SYSTEMS
© 2024 VERSICO

PARAPET BASE WALL FLASHING – FASTENED INTO DECK OR WALL

MAXIMUM WARRANTY: 30 YEARS

→ PVC/PVC KEE MEMBRANE
→ APPROVED SUBSTRATE
0 → SEE NOTE
PS (PRESSURE SENSITIVE)

TPC (Thermoplastic Common Details)

TPC–12.1

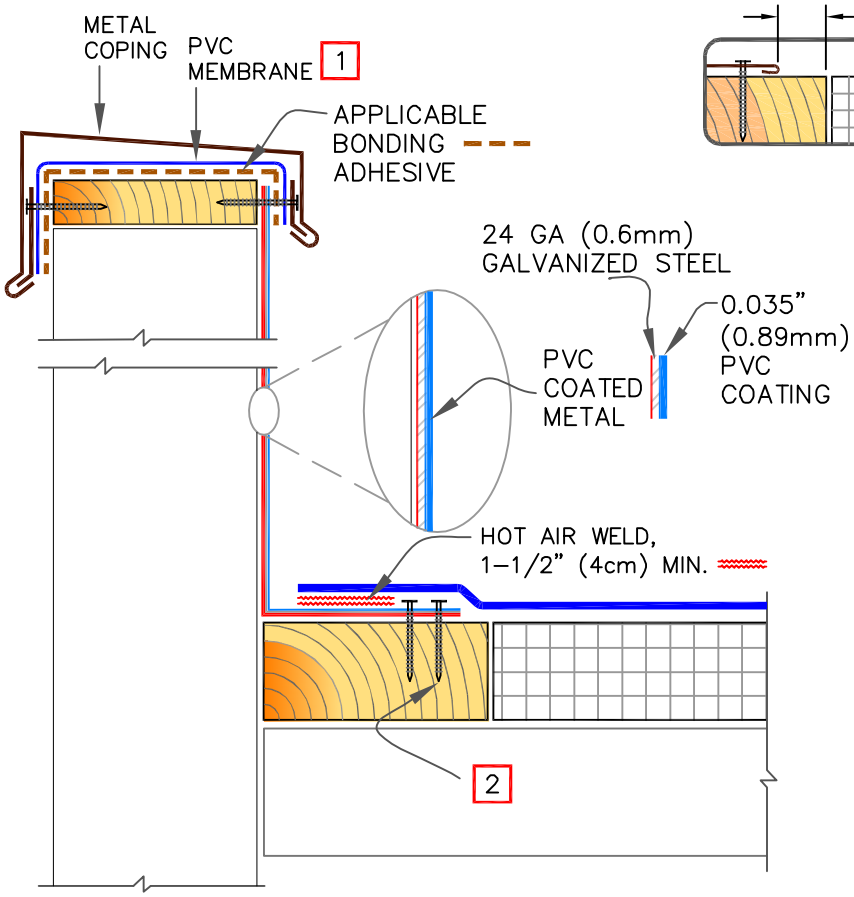

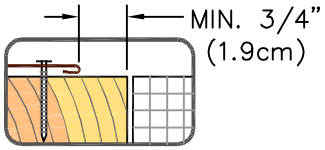

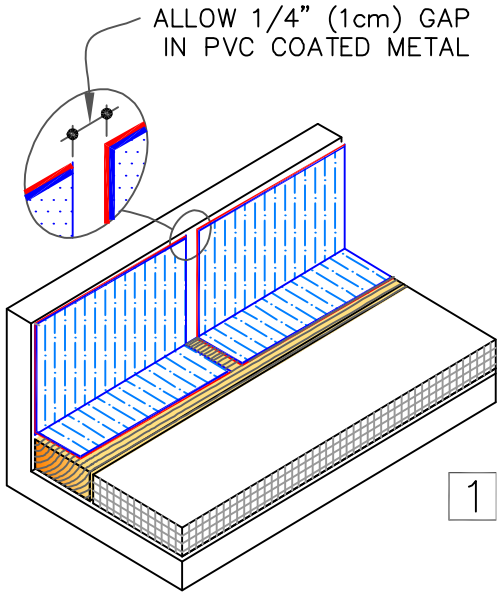

SEQUENCE:

1. 3" (7.6cm) REINFORCED MEMBRANE STRIPPING.
2. FIELD MEMBRANE.
3. TOP 6" (15.2cm) NON-REINFORCED MEMBRANE STRIPPING.

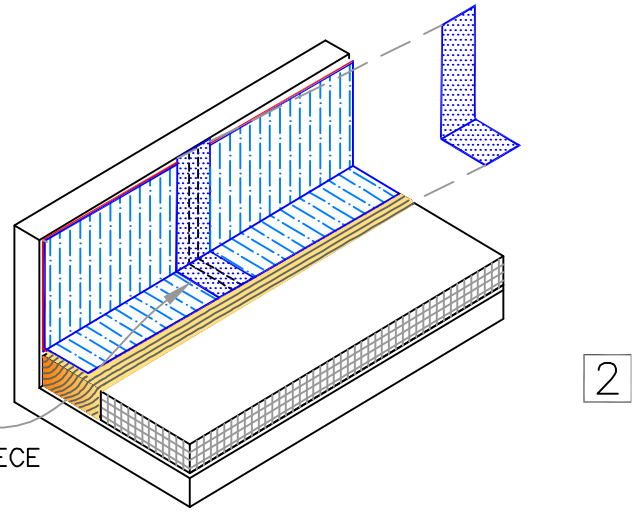

NOTES:

1. PLACE A LAYER OF PVC MEMBRANE UNDER THE METAL CAP TO PROTECT AGAINST MOISTURE INFILTRATION AT JOINTS.
2. FASTEN COATED METAL FLASHING TO WOOD NAILERS USING 1-1/2" (4cm) MIN. RING SHANK NAILS SPACED 6" (15cm) ON CENTER AND STAGGERED APPROX. 1/2" (1.5cm).
3. SEE TPC-15.3 FOR ADDITIONAL INFORMATION.

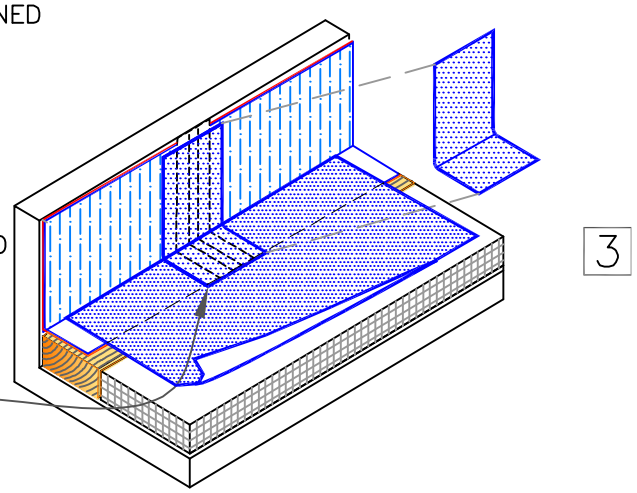

© 2024 VERSICO

PVC COATED METAL WALL FLASHING

MAXIMUM WARRANTY: 30 YEARS

PVC/PVC KEE MEMBRANE
APPROVED SUBSTRATE
0 SEE NOTE
PS (PRESSURE SENSITIVE)

TPC (Thermoplastic Common Details)

TPC-12.3

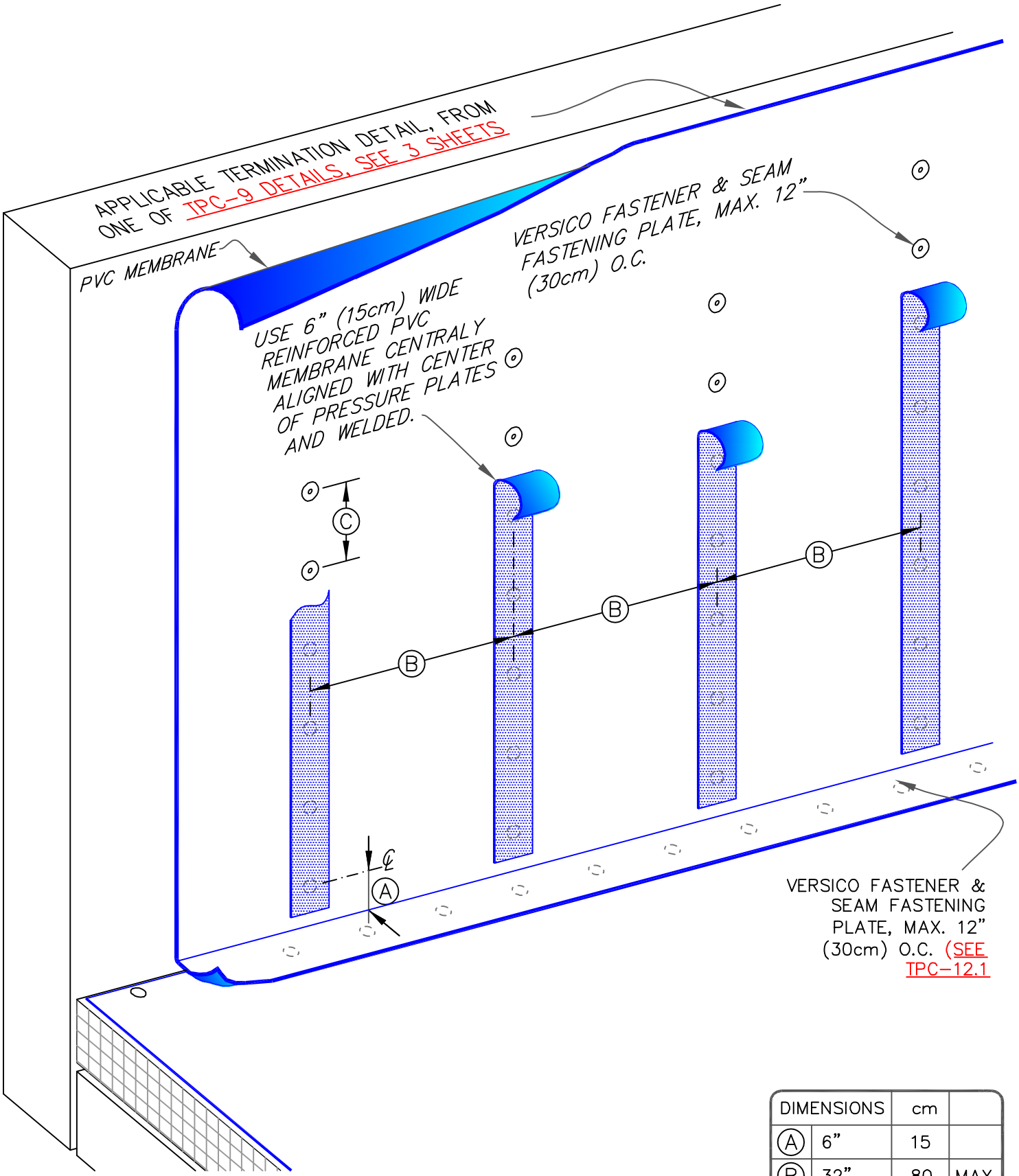

DIMENSIONS		cm	
A	6"	15	
B	32"	80	MAX.
C	12"	30	MAX.

VERSICO ROOFING SYSTEMS

© 2024 VERSICO

PARAPET FLASHING / NO ADHESION – ANY HEIGHT OPTION

MAXIMUM WARRANTY: 30 YEARS

PVC/PVC KEE MEMBRANE

APPROVED SUBSTRATE

0 → SEE NOTE

PS (PRESSURE SENSITIVE)

TPC (Thermoplastic Common Details)

TPC–12.6

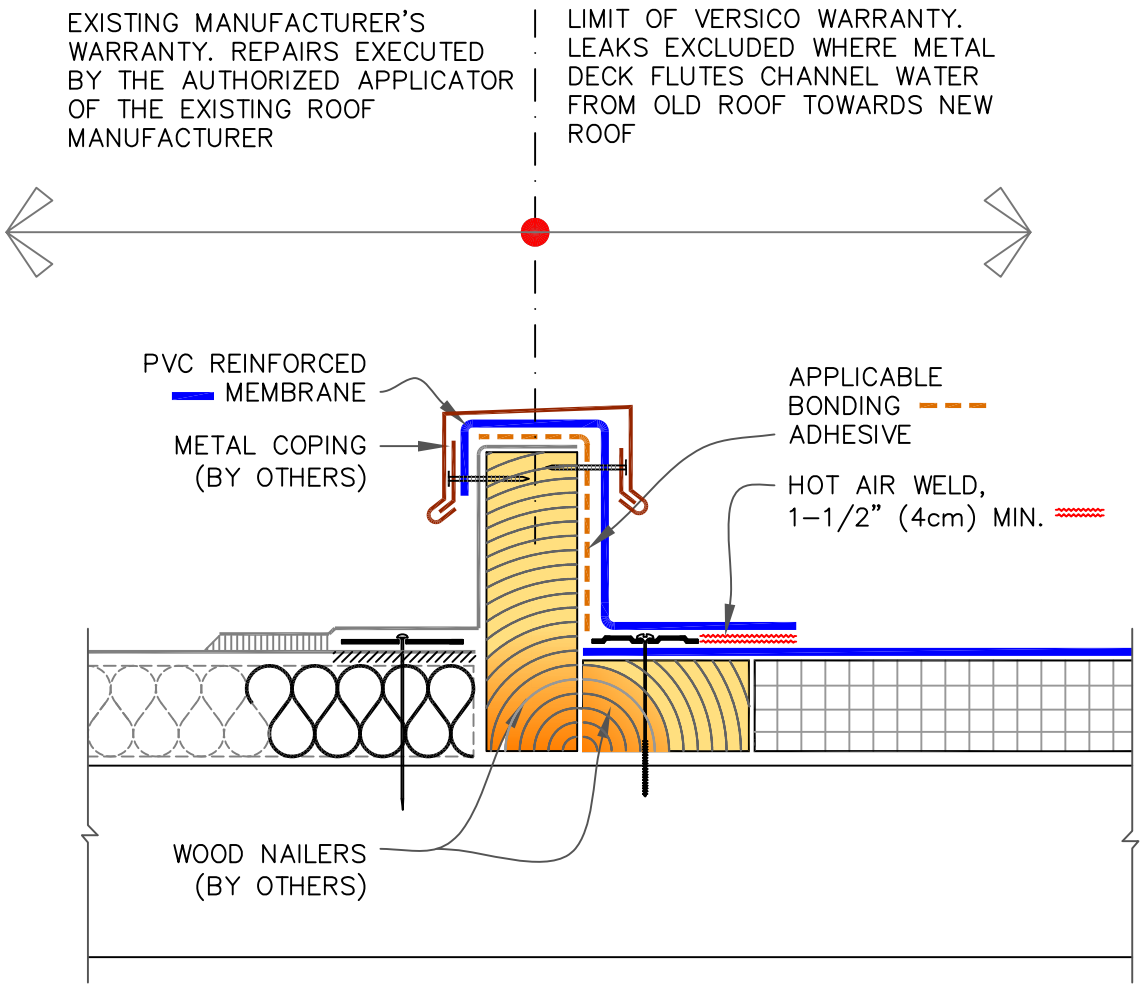

NOTES:

1. POSITION MEMBRANE FASTENING PLATES 1/2" (1.5cm) TO 1" (2.5cm) FROM EDGE OF DECK MEMBRANE.
2. ENSURE THE LOCATION OF CURB WILL NOT IMPEDE THE FLOW OF WATER AT EXISTING ADJACENT ROOF.

PVC ONLY (NOT KEE HP)
IN LIEU OF BONDING ADHESIVE, THE CURB FLASHING MAY BE INSTALLED IN CAV GRIP 3V.

VERSICO ROOFING SYSTEMS
© 2024 VERSICO

PVC TIE–IN TO EXISTING SINGLE PLY ROOF WITH CURB

MAXIMUM WARRANTY: 30 YEARS

→ PVC/PVC KEE MEMBRANE
→ APPROVED SUBSTRATE
0 → SEE NOTE
PS (PRESSURE SENSITIVE)

TPC (Thermoplastic Common Details)

TPC–13.3

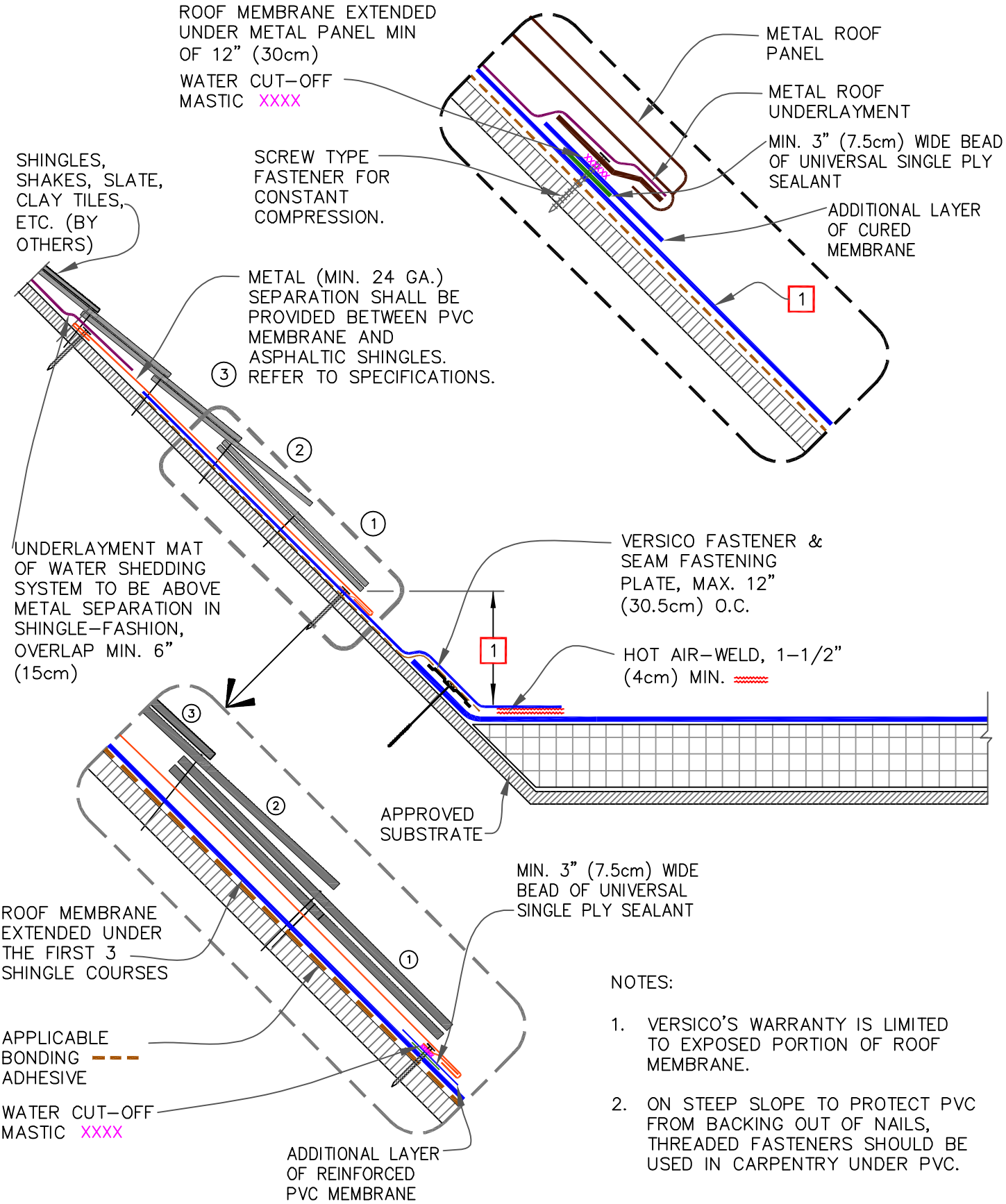

NOTES:

1. VERSICO'S WARRANTY IS LIMITED TO EXPOSED PORTION OF ROOF MEMBRANE.
2. ON STEEP SLOPE TO PROTECT PVC FROM BACKING OUT OF NAILS, THREADED FASTENERS SHOULD BE USED IN CARPENTRY UNDER PVC.

VERSICO ROOFING SYSTEMS

© 2024 VERSICO

PVC TIE-IN TO SHINGLED ROOF

MAXIMUM WARRANTY: 30 YEARS

PVC/PVC KEE MEMBRANE
APPROVED SUBSTRATE
0 → SEE NOTE
PS (PRESSURE SENSITIVE)

TPC (Thermoplastic Common Details)

TPC-13.6

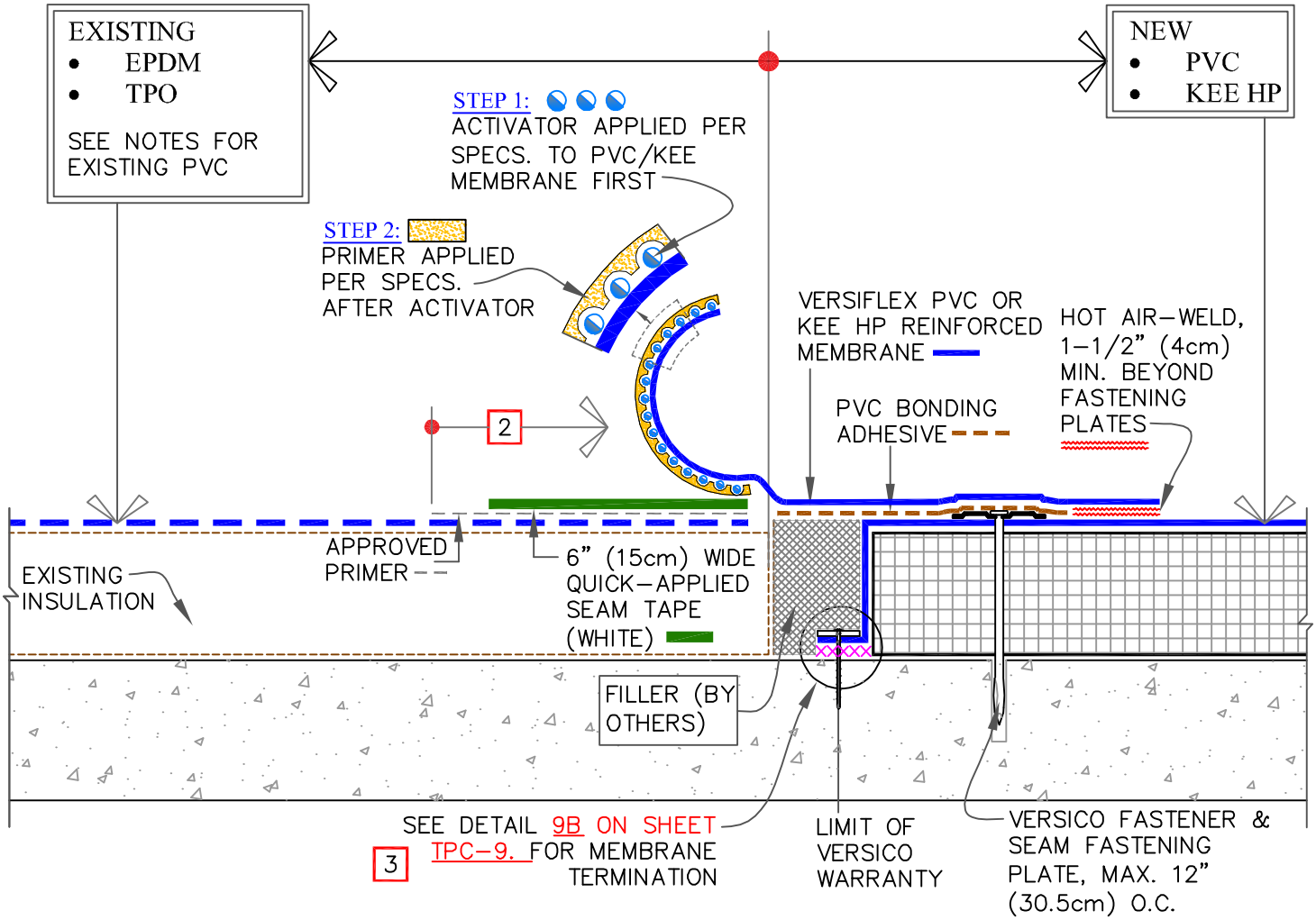

NOTES:

1. ON EXISTING WARRANTED ROOFS, SEEK WRITTEN APPROVAL OF ITS MANUFACTURER FOR ACCEPTANCE OF THIS DETAIL. FOR EXISTING BALLASTED SYSTEMS BY OTHERS, CONSULT RESPECTIVE MANUFACTURER FOR ACCEPTABLE GRAVEL CONTAINMENT TO PREVENT GRAVEL MIGRATION.

2. EXISTING EPDM/TPO MEMBRANES: CLEAN THE SEAMING AREA WITH WEATHERED MEMBRANE CLEANER AND ALLOW TO DRY. APPLY APPROVED PRIMER.

   EXISTING PVC OR KEE MEMBRANES: IF EXISTING MEMBRANE IS NOT ACCEPTABLE FOR WELDING, UTILIZE STEP 1 ACTIVATOR AND STEP 2 PRIMER PROCESS.

3. WATER CUT–OFF MASTIC MUST BE HELD UNDER CONSTANT COMPRESSION. WHEN RE–ROOFING OVER PRECAST CONCRETE, APPLY LIBERAL BEAD OF WATER CUT–OFF MASTIC IN JOINTS TO PREVENT MOISTURE MIGRATION.

WHEN USING 80-MIL (2.03mm) THICK MEMBRANE
APPLY A 4–1/2" (11.43cm) DIAMETER "T–JOINT" COVER AT FIELD SPLICE INTERSECTIONS, CENTRALLY ALIGNED.

VERSICO ROOFING SYSTEMS
© 2024 VERSICO

PVC/KEE HP TIE–IN TO SINGLE–PLY ROOF MEMBRANE ON CONCRETE DECK

→ PVC/PVC KEE MEMBRANE
→ APPROVED SUBSTRATE
0 → SEE NOTE
PS (PRESSURE SENSITIVE)

TPC (Thermoplastic Common Details)

TPC–13.7

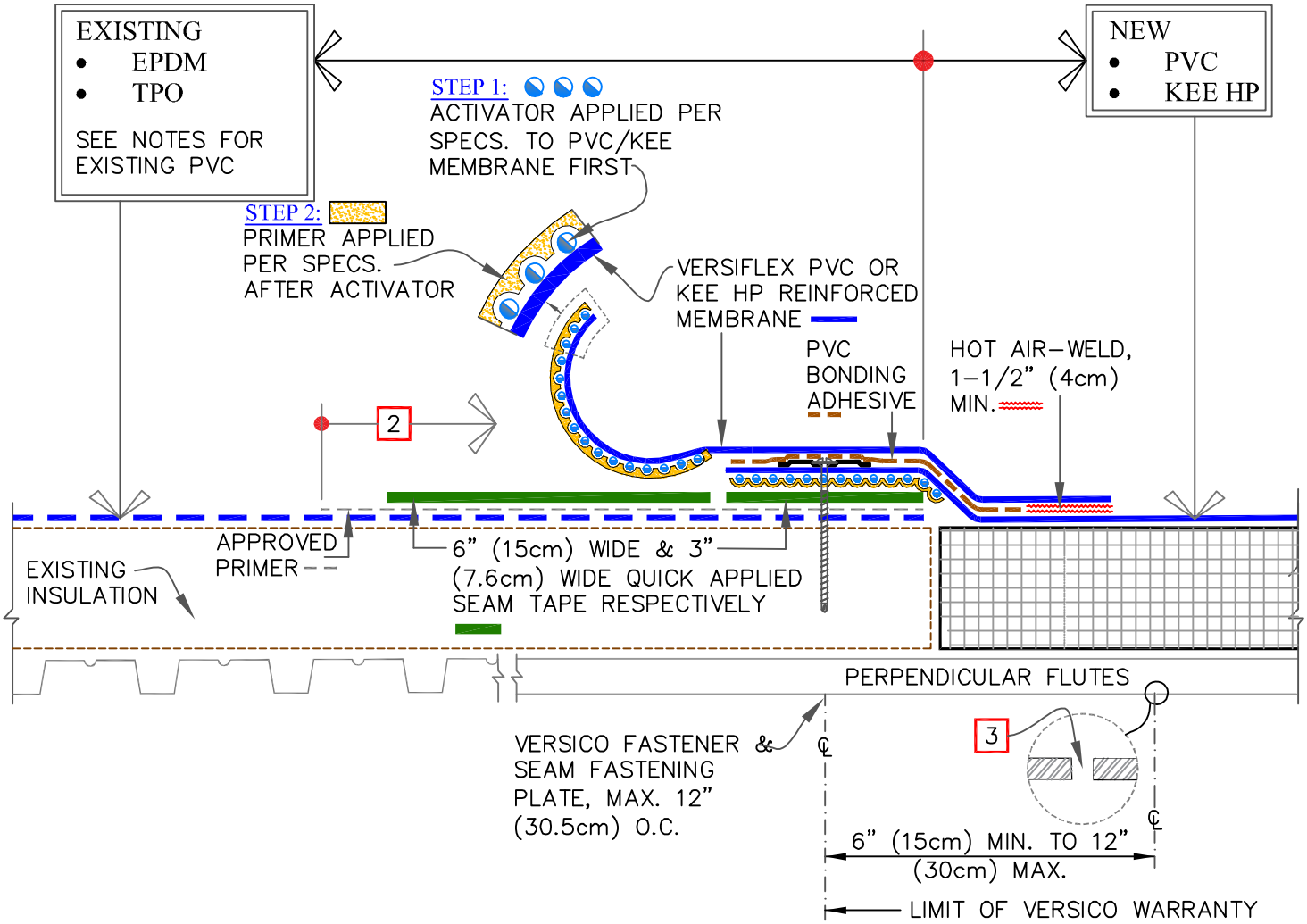

NOTES:

1. ON EXISTING WARRANTED ROOFS, SEEK WRITTEN APPROVAL OF ITS MANUFACTURER FOR ACCEPTANCE OF THIS DETAIL. FOR EXISTING BALLASTED SYSTEMS BY OTHERS, CONSULT RESPECTIVE MANUFACTURER FOR ACCEPTABLE GRAVEL CONTAINMENT TO PREVENT GRAVEL MIGRATION.

2. EXISTING EPDM/TPO MEMBRANES: CLEAN THE SEAMING AREA WITH WEATHERED MEMBRANE CLEANER AND ALLOW TO DRY. APPLY APPROVED PRIMER.

   EXISTING PVC OR KEE MEMBRANES: IF EXISTING MEMBRANE IS NOT ACCEPTABLE FOR WELDING, UTILIZE STEP 1 ACTIVATOR AND STEP 2 PRIMER PROCESS.

3. IF FLUTES ARE PERPENDICULAR, DRILL 3/8" (1cm) DIAMETER WEEP HOLES INTO THE BOTTOM FLUTES OF THE STEEL DECK ALONG THE TIE–IN.

WHEN USING 80-MIL (2.03mm) THICK MEMBRANE
APPLY A 4–1/2" (11.43cm) DIAMETER "T–JOINT" COVER AT FIELD SPLICE INTERSECTIONS, CENTRALLY ALIGNED.

VERSICO ROOFING SYSTEMS
© 2024 VERSICO

PVC/KEE HP TIE–IN TO EXISTING SINGLE–PLY ROOF MEMBRANES ON METAL DECK

→ PVC/PVC KEE MEMBRANE
→ APPROVED SUBSTRATE
0 → SEE NOTE
PS (PRESSURE SENSITIVE)

TPC (Thermoplastic Common Details)

TPC–13.8

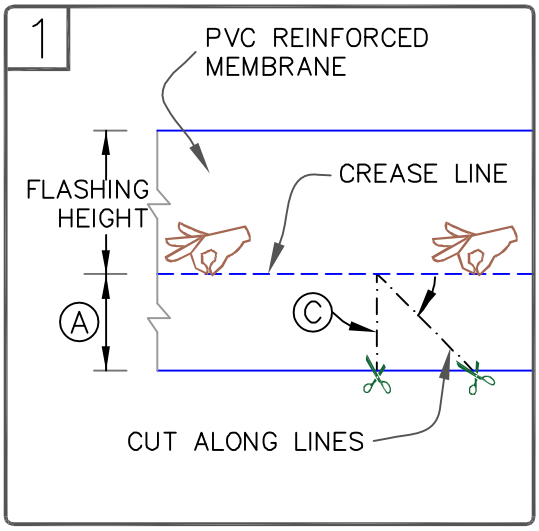

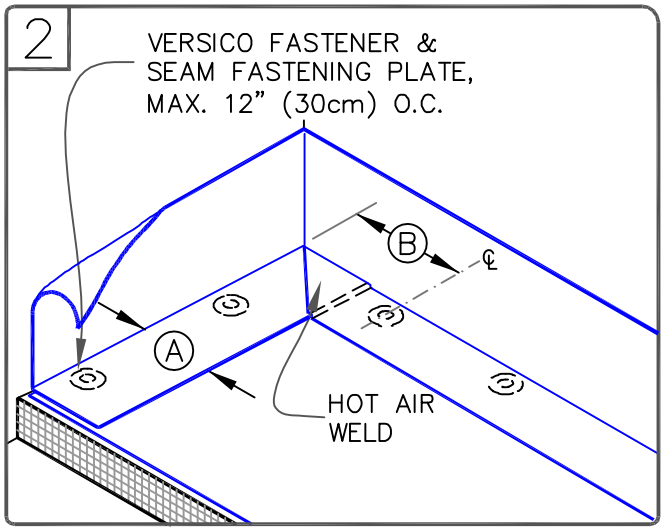

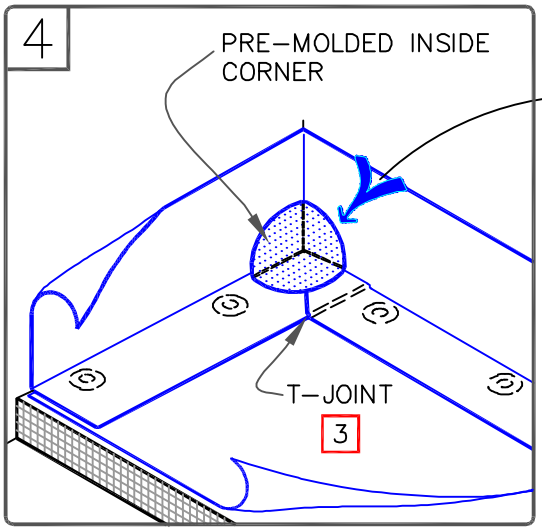

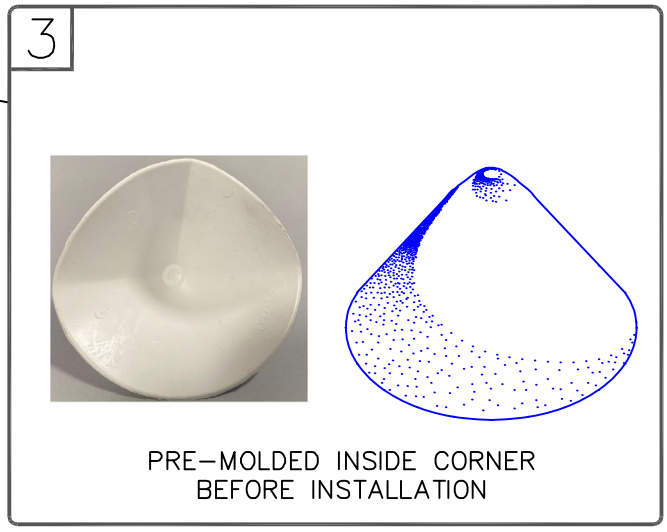

WHEN USING 80-MIL (2.03mm) THICK MEMBRANE
APPLY A 4-1/2" (11.43cm) DIAMETER "T-JOINT" COVER AT FIELD SPLICE INTERSECTIONS, CENTRALLY ALIGNED.

NOTES:

1. POSITION FASTENING PLATES 6" TO 9" (15 TO 23cm) FROM THE CORNER AND 1/2" TO 1" (1.5 TO 2.5cm) FROM EDGE OF MEMBRANE.

2. REFER TO VERSICO SPECIFICATIONS FOR ACCEPTABLE VERSICO FASTENERS AND PLATES.

DIMENSIONS		cm	
A	6"	15	APPROX.
B	6"–9"	15–23	
C	45–DEGREES APPROX.		

VERSICO ROOFING SYSTEMS
© 2024 VERSICO

PRE-MOLDED INSIDE CORNER FLASHING

MAXIMUM WARRANTY: 30 YEARS

PVC/PVC KEE MEMBRANE
APPROVED SUBSTRATE
0 → SEE NOTE
PS (PRESSURE SENSITIVE)

TPC (Thermoplastic Common Details)

TPC–15.1

CAUTION

DETAIL NOT FOR USE ON 25 OR 30-YEAR WARRANTY PROJECTS, PRE-FABRICATED/PRE-MOLDED ACCESSORIES MUST BE UTILIZED. ACCEPTABLE FLASHING SHALL CONFORM WITH PVC UNIVERSAL DETAIL TPC-15.1 OR TPC-15.7.

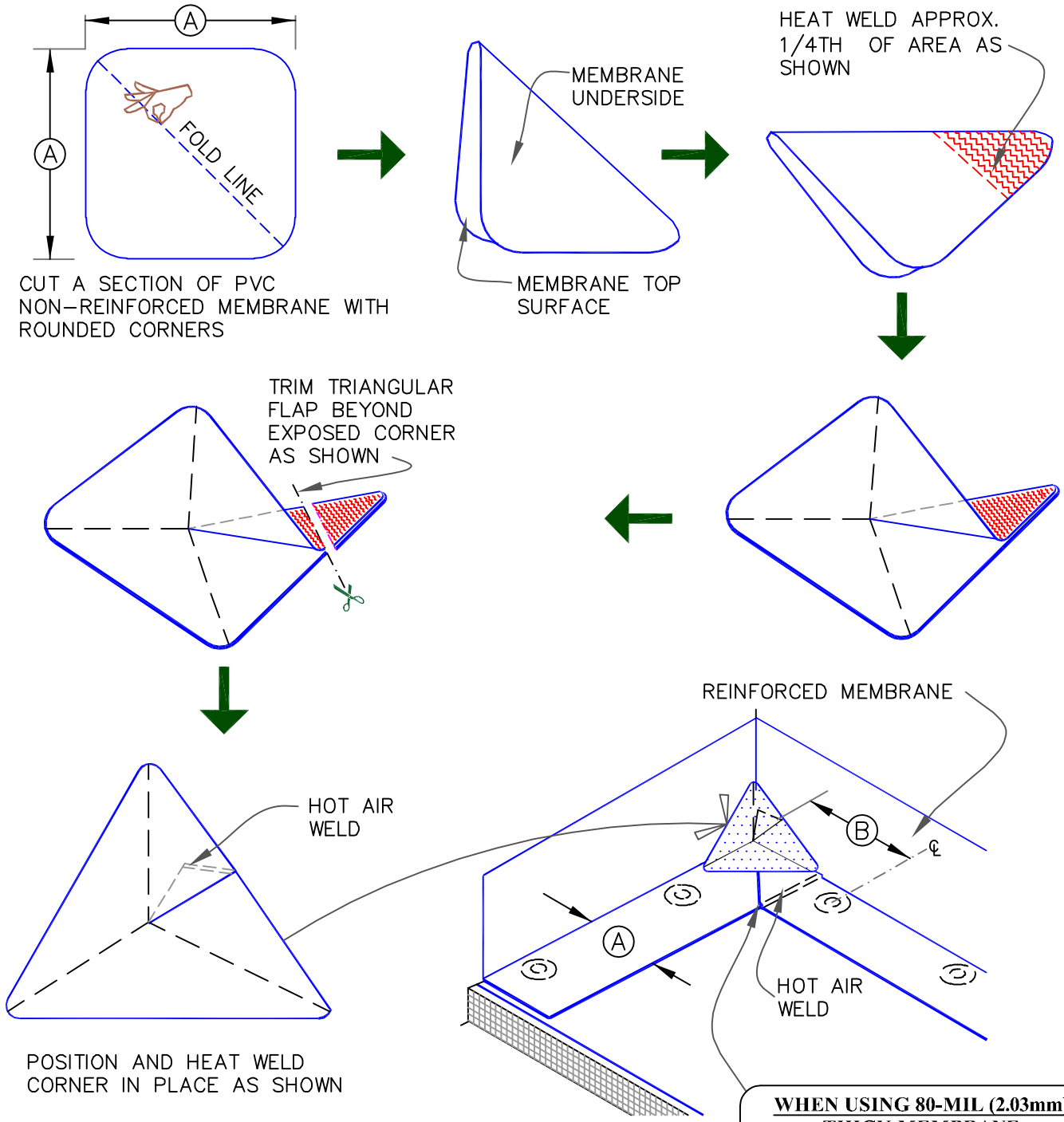

DIMENSIONS		cm	
A	6"	15	APPROX.
B	6"-9"	15-23	

WHEN USING 80-MIL (2.03mm) THICK MEMBRANE

APPLY A 4-1/2" (11.43cm) DIAMETER "T-JOINT" COVER AT FIELD SPLICE INTERSECTIONS, CENTRALLY ALIGNED.

VERSICO ROOFING SYSTEMS

© 2024 VERSICO

FIELD FABRICATED INSIDE CORNER FLASHING

MAXIMUM WARRANTY: 20 YEARS

PVC/PVC KEE MEMBRANE

APPROVED SUBSTRATE

0 → SEE NOTE

PS (PRESSURE SENSITIVE)

TPC (Thermoplastic Common Details)

TPC-15.2

1

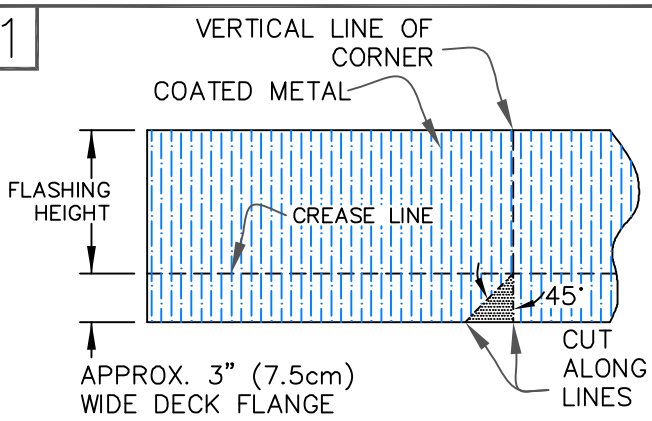

CREASE COATED METAL FLASHING ALONG DASHED LINES AFTER CUTTING AND REMOVING SHADED TRIANGLE.

2

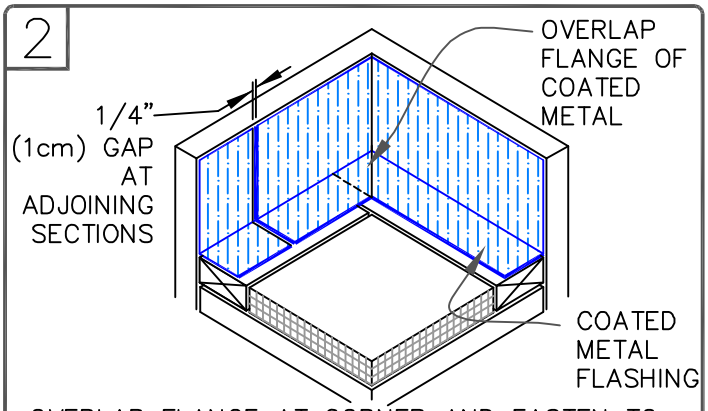

OVERLAP FLANGE AT CORNER AND FASTEN TO WOOD NAILERS USING 1–1/2" (4cm) RING SHANK NAILS SPACED 6" (15cm) O.C., STAGGERED 1/2" (1.5cm).

3

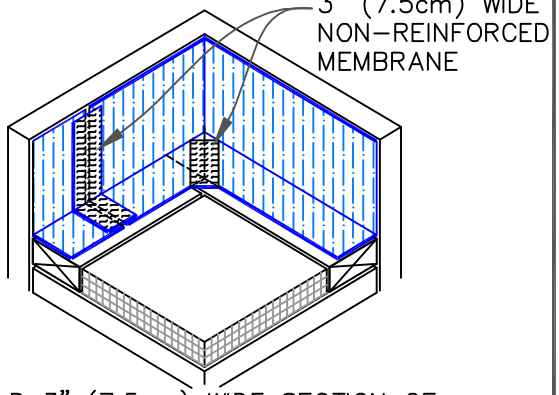

HEAT WELD 3" (7.5cm) WIDE SECTION OF NON–REINFORCED MEMBRANE OVER VERTICAL JOINT IN COATED METAL AND OVER CUT EDGE AT CORNER AS SHOWN.

4

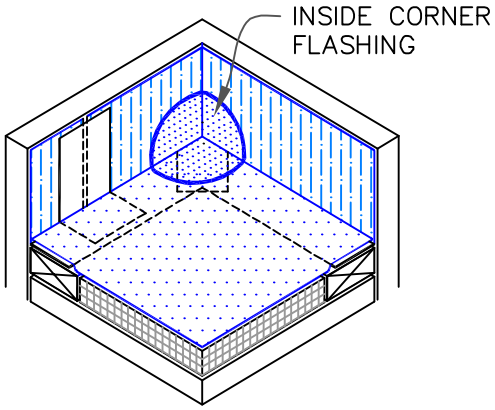

INSTALL FIELD MEMBRANE AND HEAT WELD TO FLANGE OF COATED METAL. ALSO INSTALL INSIDE CORNER FLASHING PER DETAILS: U–15A OR U–15B OR U–15G

5

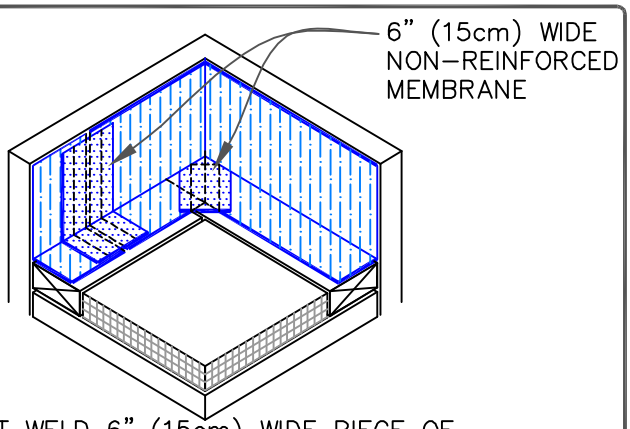

HEAT WELD 6" (15cm) WIDE PIECE OF NON–REINFORCED MEMBRANE OVER 3" WIDE REINFORCED MEMBRANE, AFTER ROOF MEMBRANE INSTALLATION

NOTES:

1. FASTEN COATED METAL FLASHING TO WOOD NAILERS USING 1–1/2" (4cm) MIN. RING SHANK NAILS SPACED 6" (15cm) ON CENTER AND STAGGERED APPROX. 1/2" (1.5cm).
2. COORDINATE THIS DETAIL WITH TPC–12.3 FOR ADDITIONAL INFORMATION.

SEQUENCE:
1. 3" (7.6cm) REINFORCED MEMBRANE STRIPPING.
2. FIELD MEMBRANE.
3. TOP 6" (15.2cm) NON–REINFORCED MEMBRANE STRIPPING.

VERSICO ROOFING SYSTEMS
© 2024 VERSICO

INSIDE CORNER WITH VERSIFLEX PVC COATED METAL WALL FLASHING

MAXIMUM WARRANTY: 30 YEARS

→ PVC/PVC KEE MEMBRANE
→ APPROVED SUBSTRATE
0 → SEE NOTE
PS (PRESSURE SENSITIVE)

TPC (Thermoplastic Common Details)

TPC–15.3

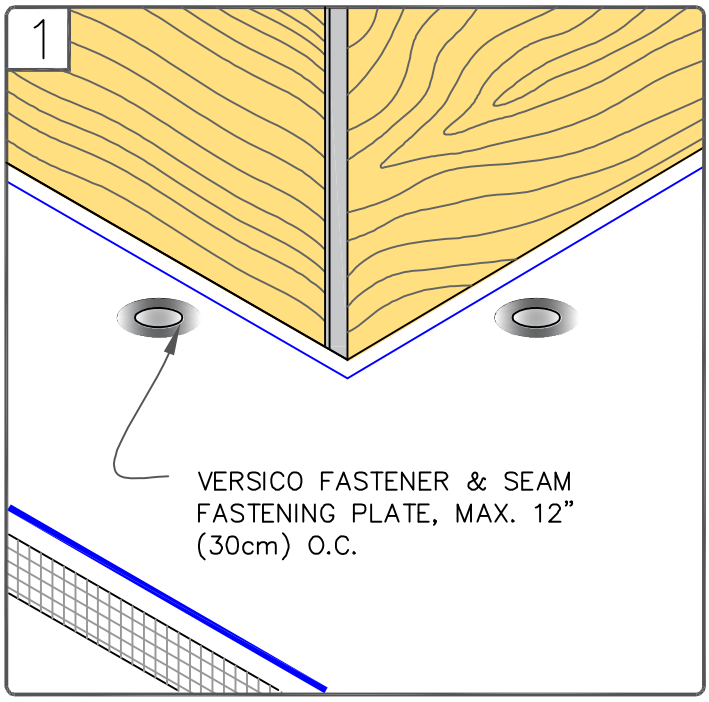

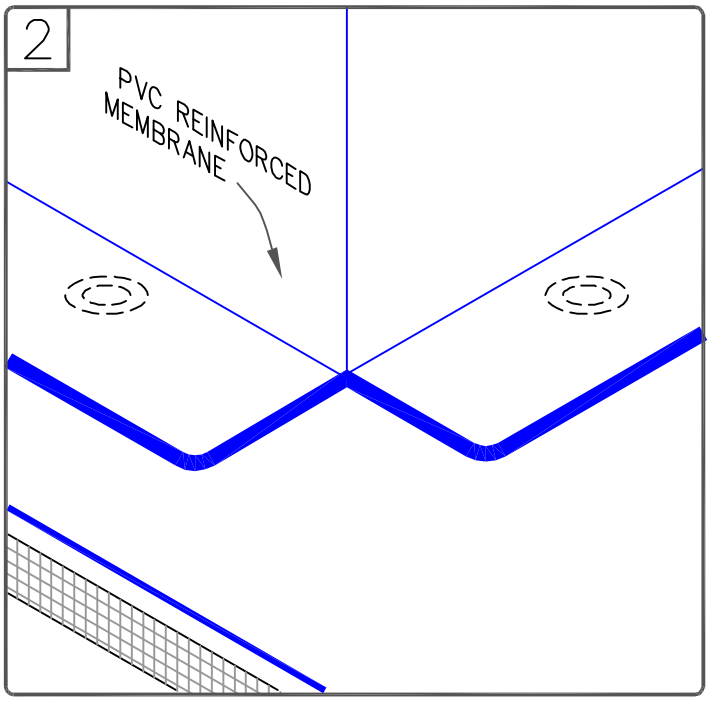

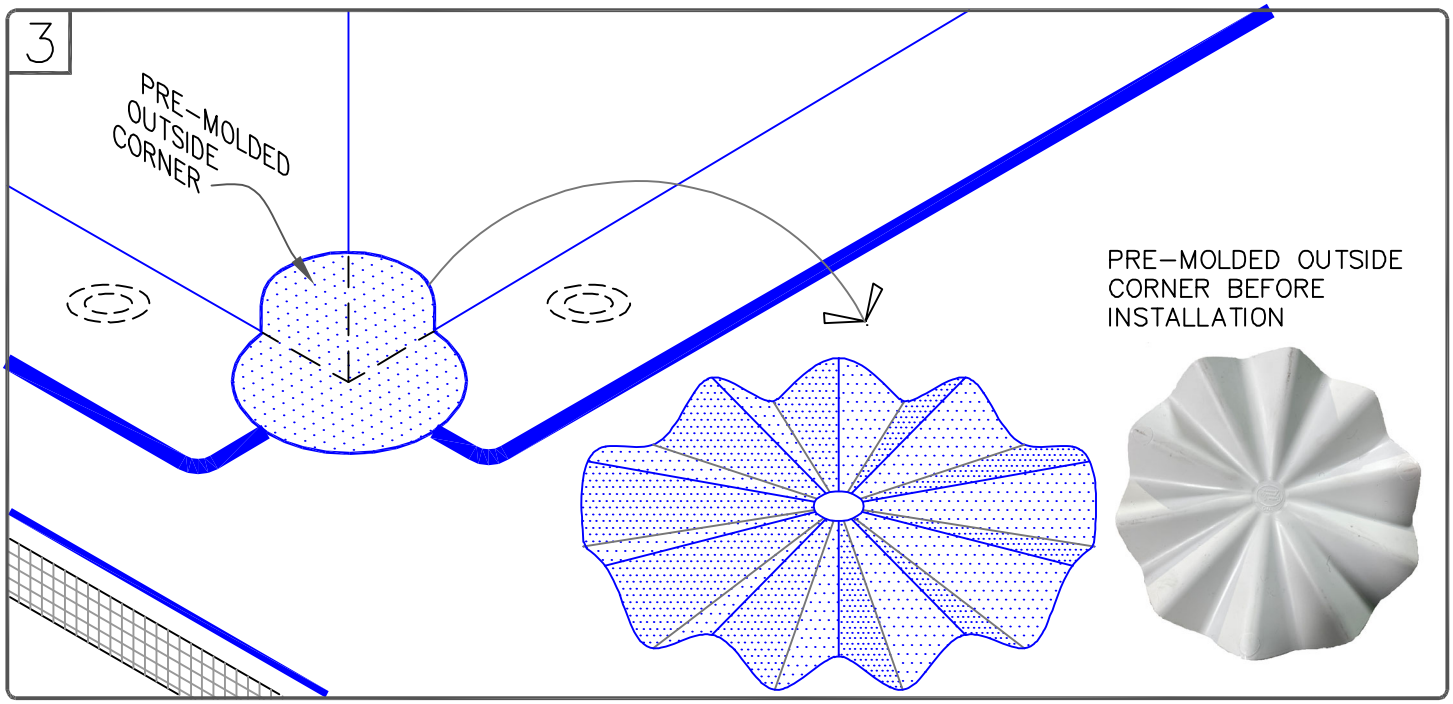

NOTES:

1. POSITION FASTENING PLATES 6"(15cm) FROM THE CORNER AND 1/2" TO 1" (1.5 TO 2.5cm) FROM EDGE OF MEMBRANE.

2. REFER TO VERSICO SPECIFICATIONS FOR ACCEPTABLE VERSICO FASTENERS AND PLATES.

VERSICO ROOFING SYSTEMS
© 2024 VERSICO

PRE-MOLDED OUTSIDE CORNER FLASHING

MAXIMUM WARRANTY: 30 YEARS

→ PVC/PVC KEE MEMBRANE
→ APPROVED SUBSTRATE
0 → SEE NOTE
PS (PRESSURE SENSITIVE)

TPC (Thermoplastic Common Details)

TPC-15.4

CAUTION

DETAIL NOT FOR USE ON 25 OR 30-YEAR WARRANTY PROJECTS, PRE-FABRICATED/PRE-MOLDED ACCESSORIES MUST BE UTILIZED. ACCEPTABLE FLASHING SHALL CONFORM WITH PVC UNIVERSAL DETAIL TPC-15.4 OR TPC-15.7.

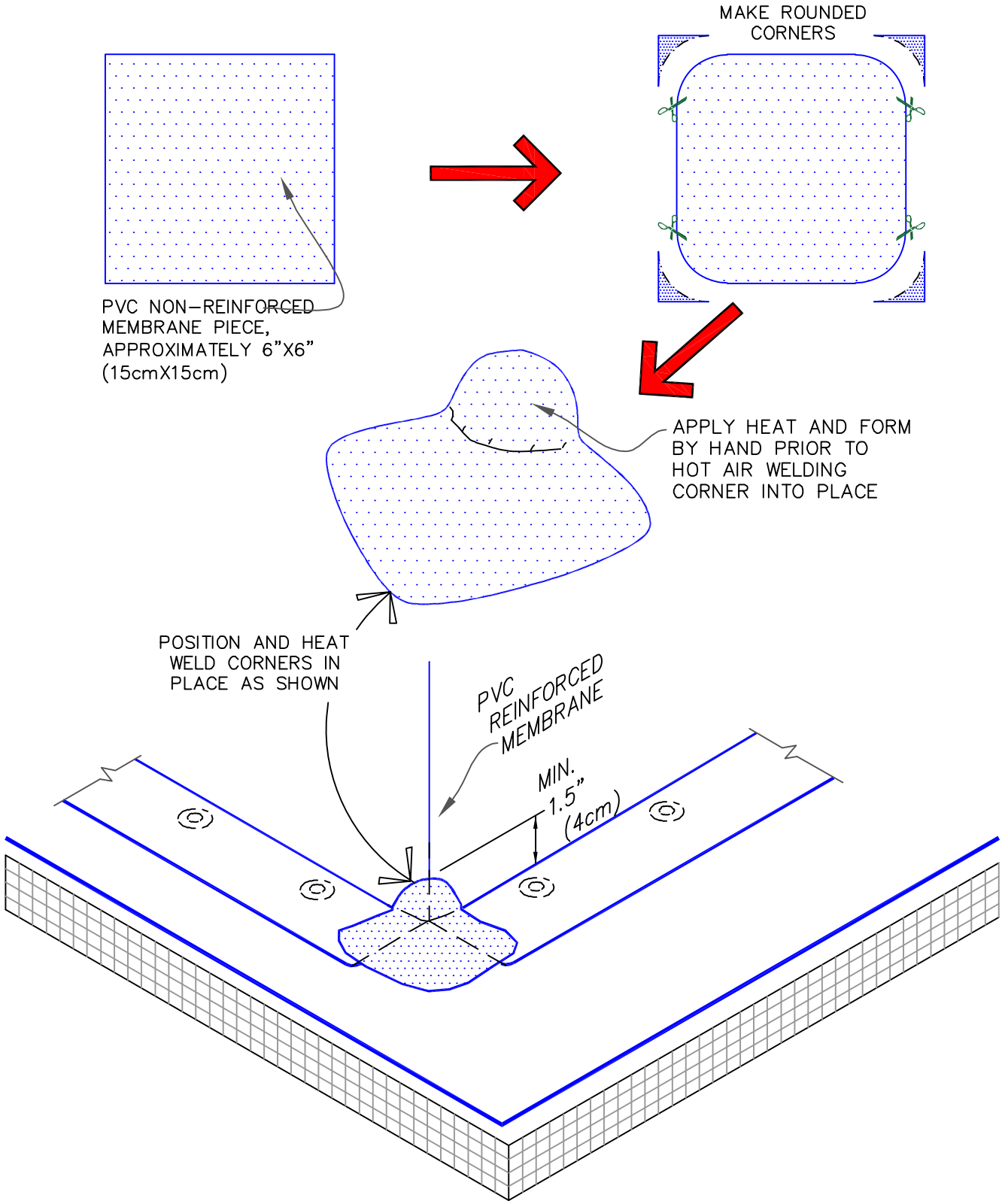

VERSICO ROOFING SYSTEMS

© 2024 VERSICO

FIELD FABRICATED OUTSIDE CORNER FLASHING

MAXIMUM WARRANTY: 20 YEARS

PVC/PVC KEE MEMBRANE

APPROVED SUBSTRATE

0 → SEE NOTE

PS (PRESSURE SENSITIVE)

TPC (Thermoplastic Common Details)

TPC-15.5

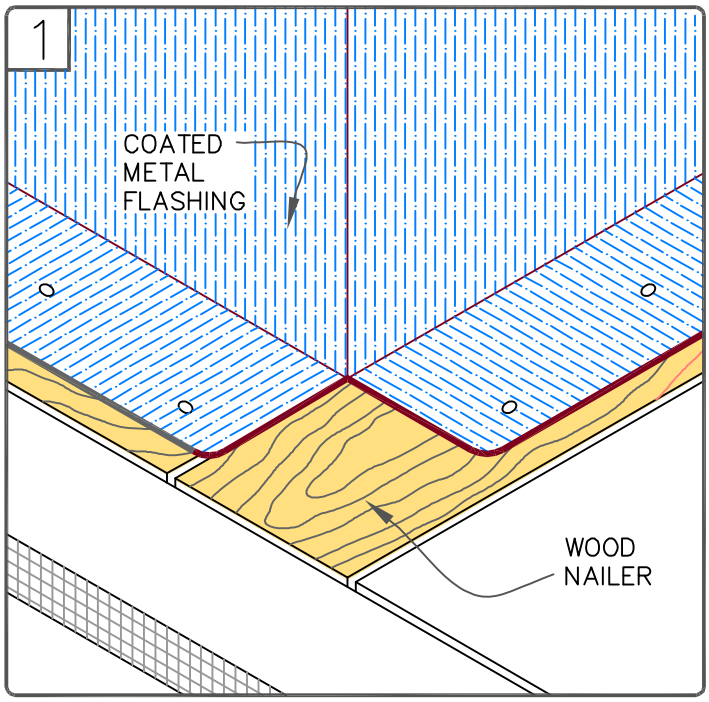

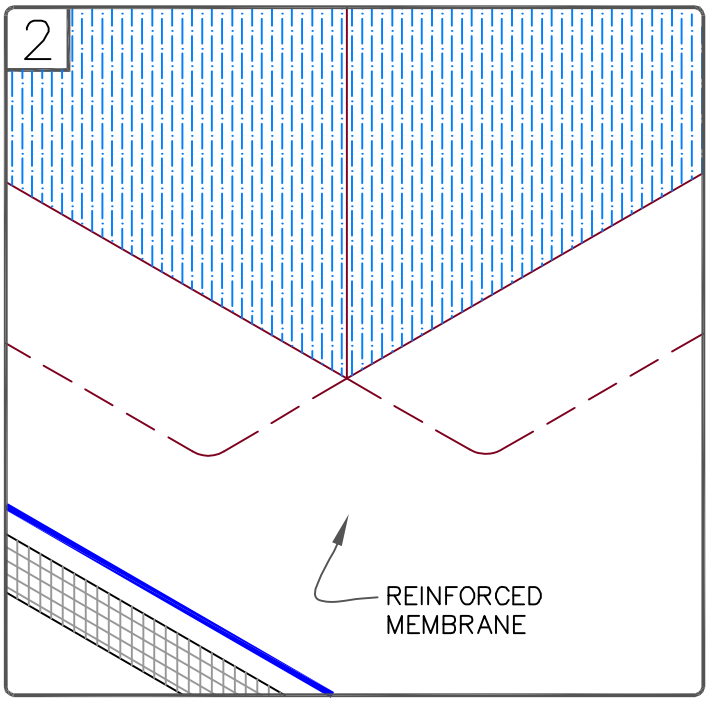

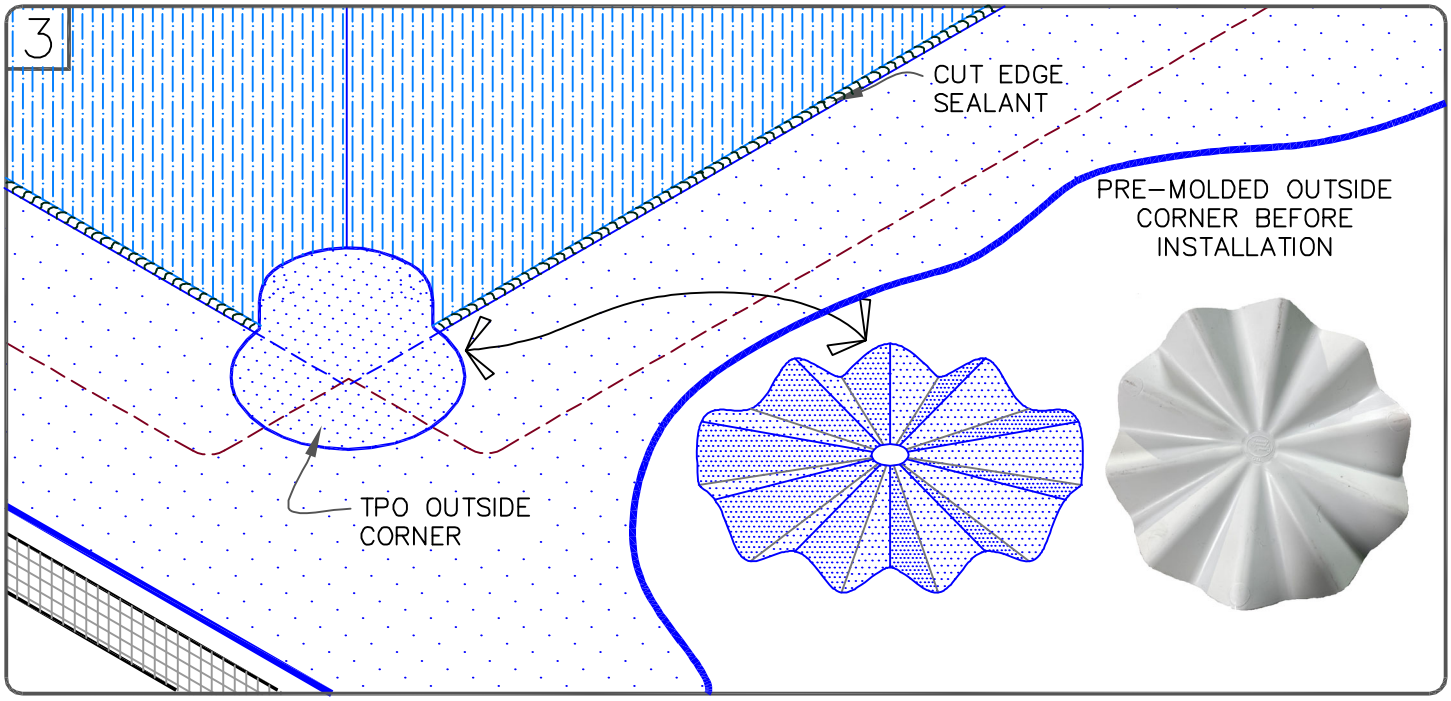

NOTES:

1. FASTEN COATED METAL FLASHING TO WOOD NAILERS USING 1-1/2" (4cm) MIN. RING SHANK NAILS SPACED 6" (15cm) ON CENTER AND STAGGERED APPROX. 1/2" (1.5cm).

2. REFER TO PVC DETAIL TPC-5.2 FOR FLASHING VERTICAL JOINTS IN COATED METAL.

VERSICO ROOFING SYSTEMS
© 2024 VERSICO

OUTSIDE CORNER WITH PVC COATED METAL WALL FLASHING

MAXIMUM WARRANTY: 30 YEARS

PVC/PVC KEE MEMBRANE
APPROVED SUBSTRATE
0 SEE NOTE
PS (PRESSURE SENSITIVE)

TPC (Thermoplastic Common Details)

TPC-15.6

60-MIL THICK PVC, UNIVERSAL CORNERS CAN BE USED FOR 3 DIFFERENT CORNER CONDITIONS AS SHOWN BELOW

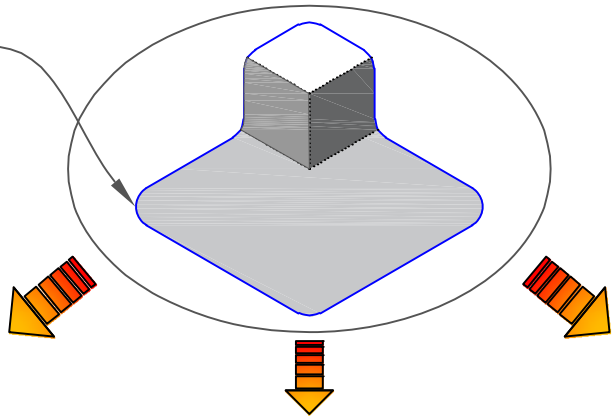

OPTION A

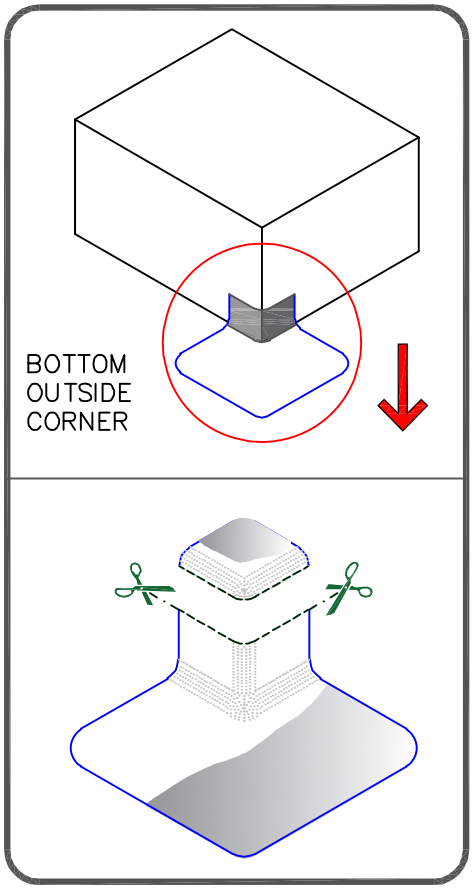

OPTION B

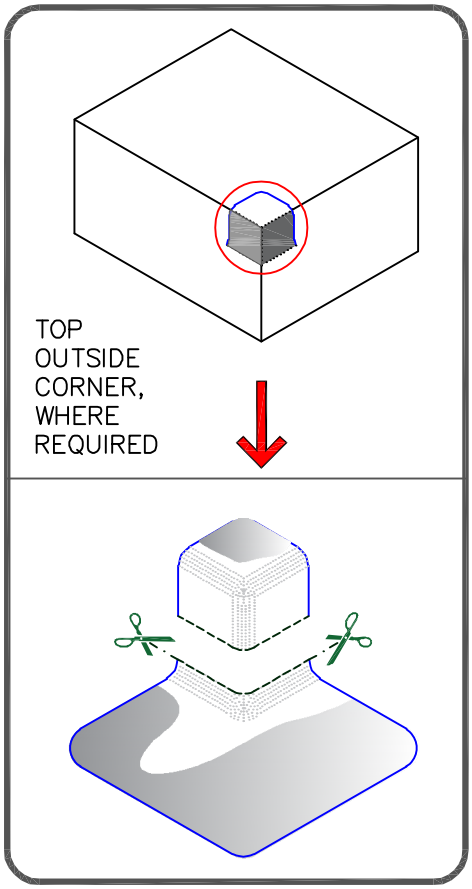

OPTION C

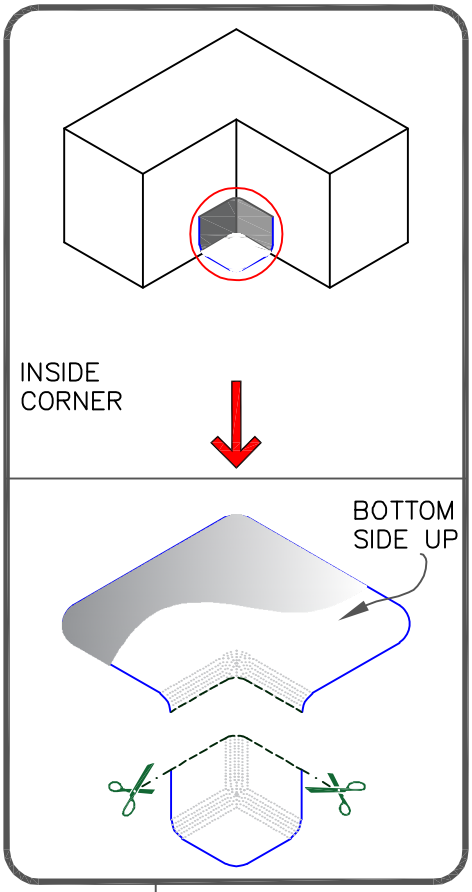

NOTES:

1. ROOF SYSTEMS MUST NOT HAVE FIELD FABRICATED OR BUILT-IN CANT STRIP.
2. REFER TO TECHNICAL DATA BULLETINS FOR COLOR AVAILABILITY.

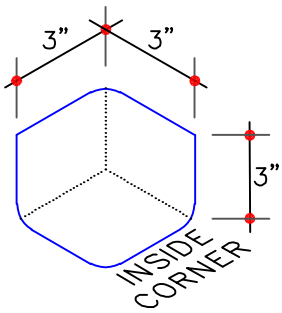

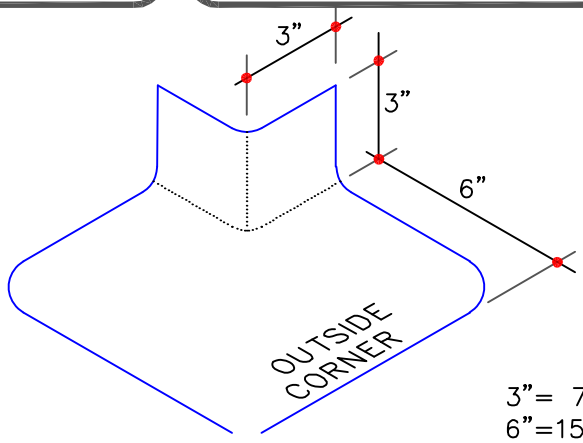

TYPICAL DIMENSIONS

3"= 7.5cm
6"=15cm

VERSICO ROOFING SYSTEMS
© 2024 VERSICO

PVC UNIVERSAL CORNERS-COMBINATION INSIDE & OUTSIDE CORNERS

MAXIMUM WARRANTY: 30 YEARS

PVC/PVC KEE MEMBRANE
APPROVED SUBSTRATE
0 SEE NOTE
PS (PRESSURE SENSITIVE)

TPC (Thermoplastic Common Details)

TPC-15.7

CAUTION

MOLDED SEALANT POCKETS MUST BE USED IN CONJUNCTION WITH RAIN HOODS FOR PROJECTS WITH 25 AND 30-YEAR WARRANTIES.

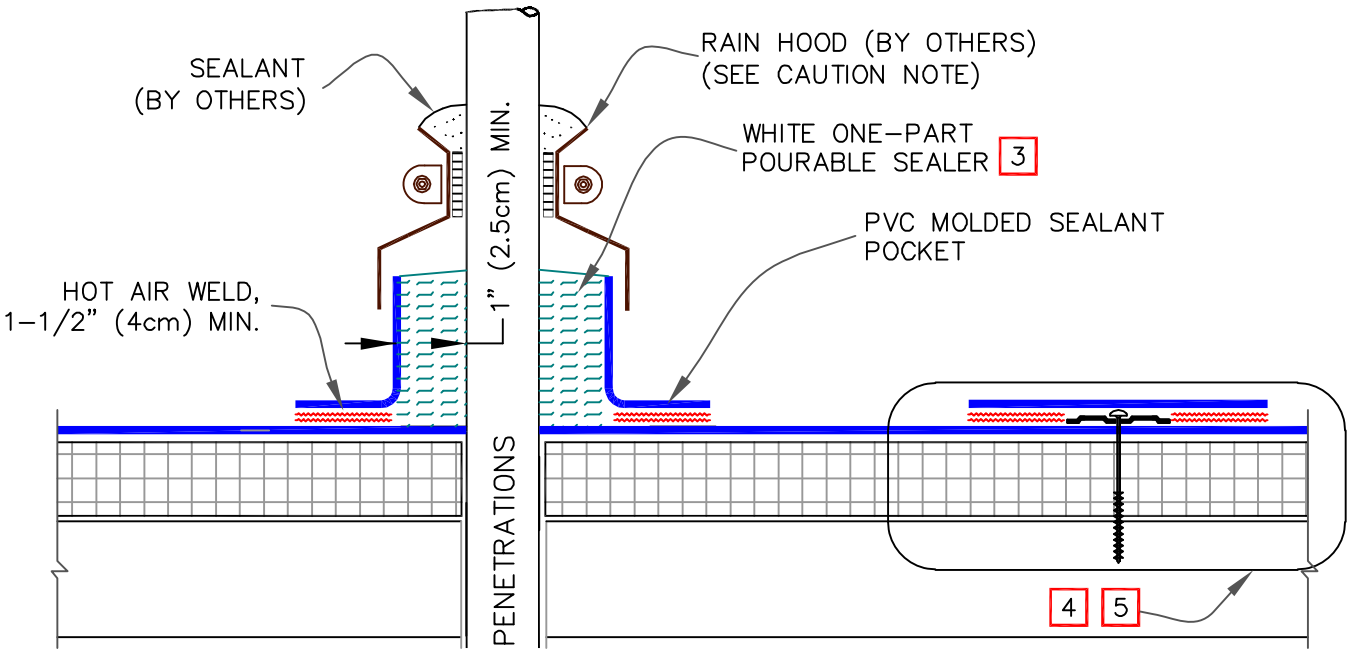

NOTES:

1. TEMPERATURE OF PIPE MUST NOT EXCEED 140˚ F (60˚ C).
2. PRIMER MUST BE APPLIED ON PENETRATION SURFACES ONLY, WHERE SEALANT WILL BE IN CONTACT.
3. FILL POCKET COMPLETELY WITH WHITE ONE-PART POURABLE SEALER UNTIL RIM IS COVERED WITH SEALANT; ENSURE ALL VOIDS ARE FILLED.
4. ON MECHANICALLY-ATTACHED SYSTEMS, INSTALL A MINIMUM OF 4 FASTENING PLATES AROUND SEALANT POCKETS WITH A DIAMETER UP TO 6" (15cm). ADDITIONAL FASTENING PLATES WILL BE REQUIRED FOR SEALANT POCKETS GREATER THAN 6" IN DIAMETER AND SHALL BE SPACED 12" (30cm) ON CENTER MAXIMUM.
5. REFER TO VERSICO SPECIFICATIONS FOR PROPER FASTENERS AND PLATES.

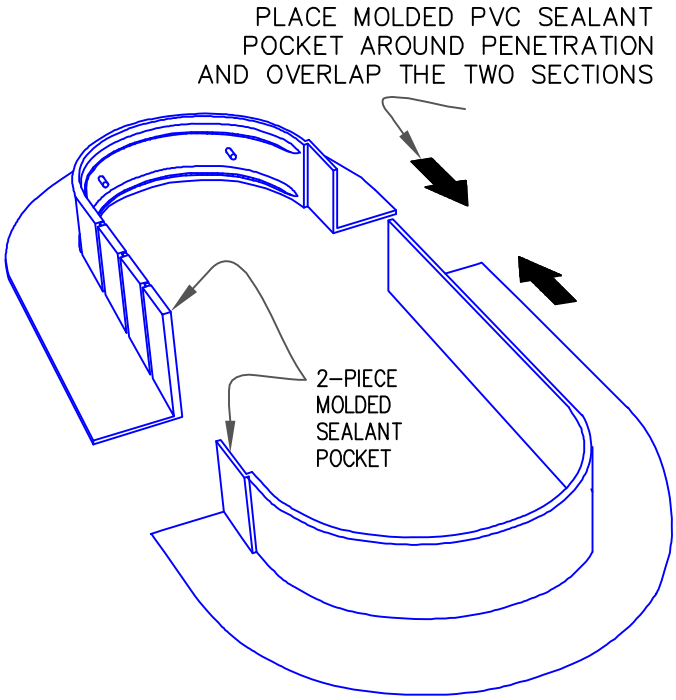

REFER TO PRODUCT DATA SHEET FOR STEP-BY-STEP INSTALLATION PROCEDURES

VERSICO ROOFING SYSTEMS
© 2024 VERSICO

MOLDED SEALANT POCKET

MAXIMUM WARRANTY: 30 YEARS

→ PVC/PVC KEE MEMBRANE
→ APPROVED SUBSTRATE
0 → SEE NOTE
PS (PRESSURE SENSITIVE)

TPC (Thermoplastic Common Details)

TPC-16.1

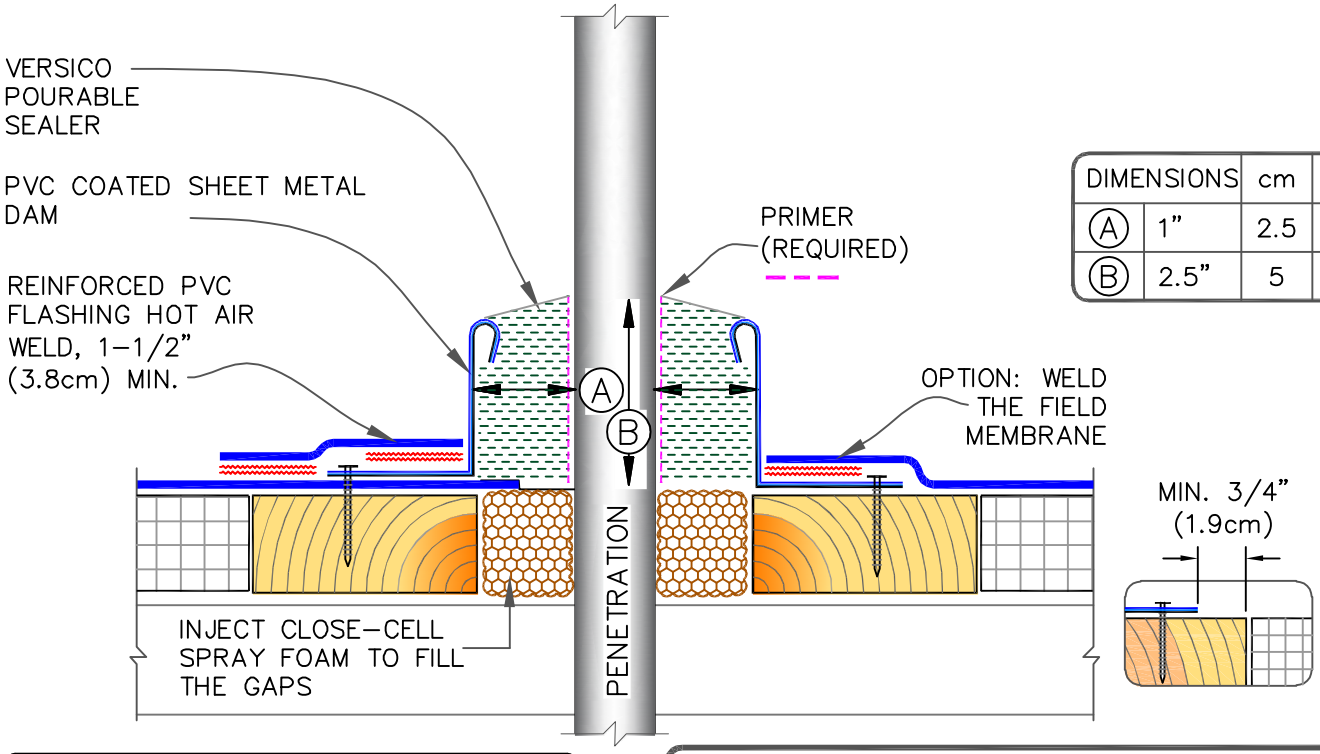

DIMENSIONS		cm	
A	1"	2.5	MIN.
B	2.5"	5	MIN.

SEQUENCE:

1. 3" (7.6cm) REINFORCED MEMBRANE STRIPPING.
2. FIELD MEMBRANE.
3. TOP 6" (15.2cm) NON-REINFORCED MEMBRANE STRIPPING.

NOTES:

1. TEMPERATURE OF PENETRATIONS MUST NOT EXCEED 140˚ F (60˚ C).
2. PVC PRIMER MUST BE APPLIED TO ALL INSIDE SURFACES AND PENETRATIONS PRIOR TO FILLING WITH SEALANT..
3. FILL POCKET COMPLETELY WITH WHITE ONE-PART POURABLE SEALER UNTIL RIM IS COVERED WITH SEALANT; ENSURE ALL VOIDS ARE FILLED.
4. ON MECHANICALLY-ATTACHED SYSTEMS, INSTALL A MINIMUM OF 4 FASTENING PLATES AROUND SEALANT POCKETS WITH A DIAMETER UP TO 6" (152mm). ADDITIONAL FASTENING PLATES WILL BE REQUIRED FOR SEALANT POCKETS GREATER THAN 6" IN DIAMETER AND SHALL BE SPACED 12" (305mm) ON CENTER MAXIMUM. FASTENERS/PLATES ARE NOT REQUIRED ON ADHERED SYSTEMS UNLESS SEALANT POCKET DIAMETER EXCEEDS 12" (305mm).
5. REFER TO VERSICO SPECIFICATIONS FOR PROPER TYPES OF FASTENERS AND PLATES.

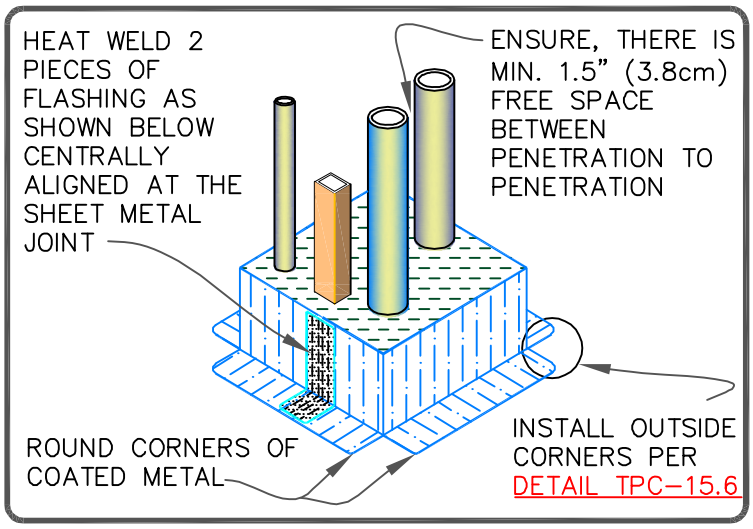

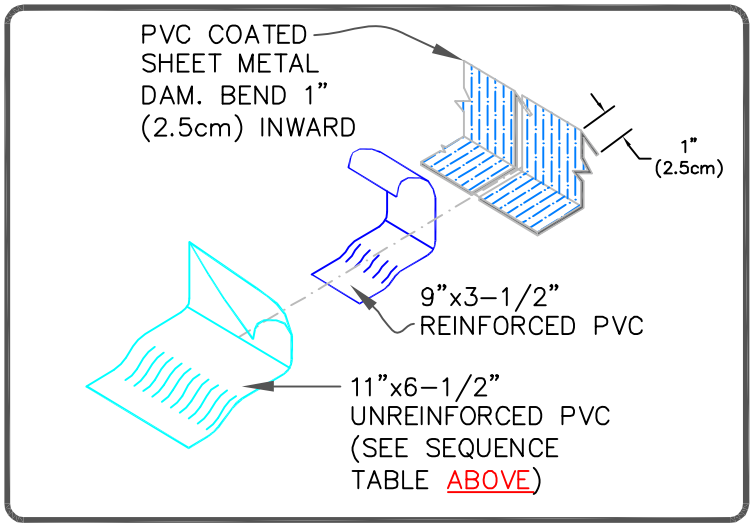

VERSICO ROOFING SYSTEMS

© 2024 VERSICO

FIELD FABRICATED PVC COATED METAL POCKET

MAXIMUM WARRANTY: 30 YEARS

PVC/PVC KEE MEMBRANE
APPROVED SUBSTRATE
0 → SEE NOTE
PS (PRESSURE SENSITIVE)

TPC (Thermoplastic Common Details)

TPC-16.2

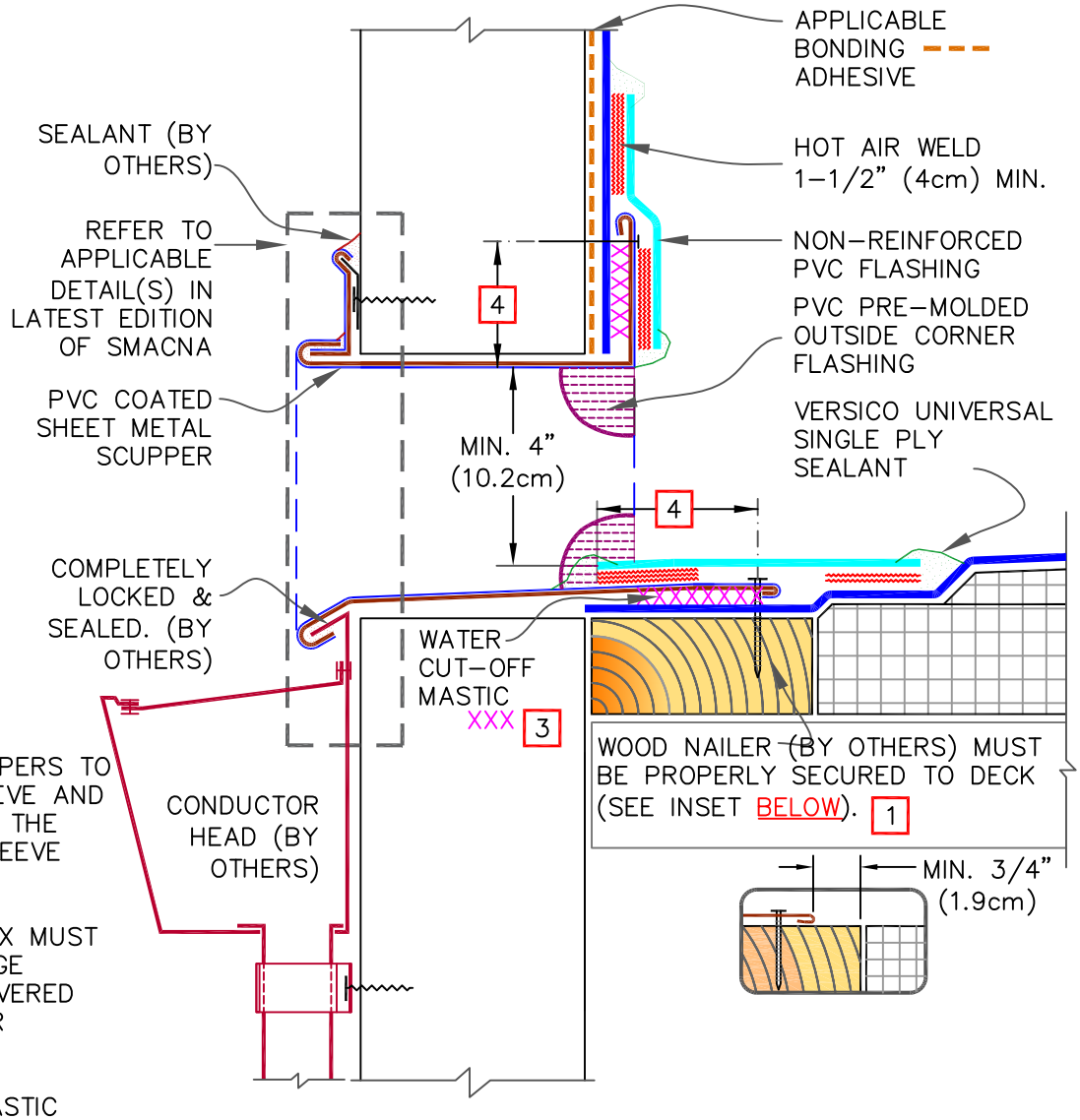

NOTES:

1. WOOD NAILERS ARE INSTALLED AT SCUPPERS TO SECURE METAL SLEEVE AND MUST EXTEND PAST THE WIDTH OF METAL SLEEVE FLANGE.
2. METAL SCUPPER BOX MUST HAVE FOLDED FLANGE CORNERS FULLY COVERED BY OUTSIDE CORNER FLASHING.
3. WATER CUT–OFF MASTIC UNDER SCUPPER FLANGES MUST BE UNDER CONSTANT COMPRESSION.
4. SCUPPER FLANGES MUST BE TOTALLY COVERED BY NON–REINFORCED FLASHING WITH MINIMUM 2" (5cm) COVERAGE PAST NAIL HEAD.

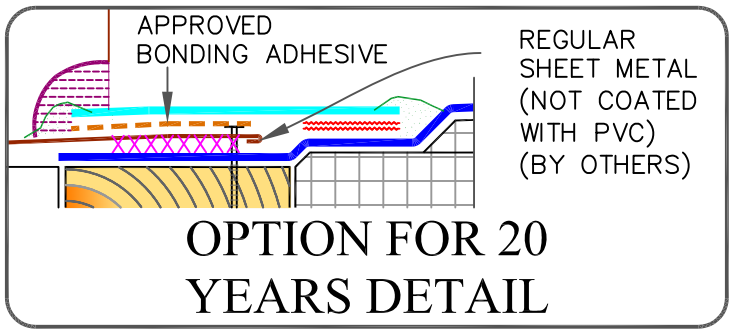

OPTION FOR 20 YEARS DETAIL

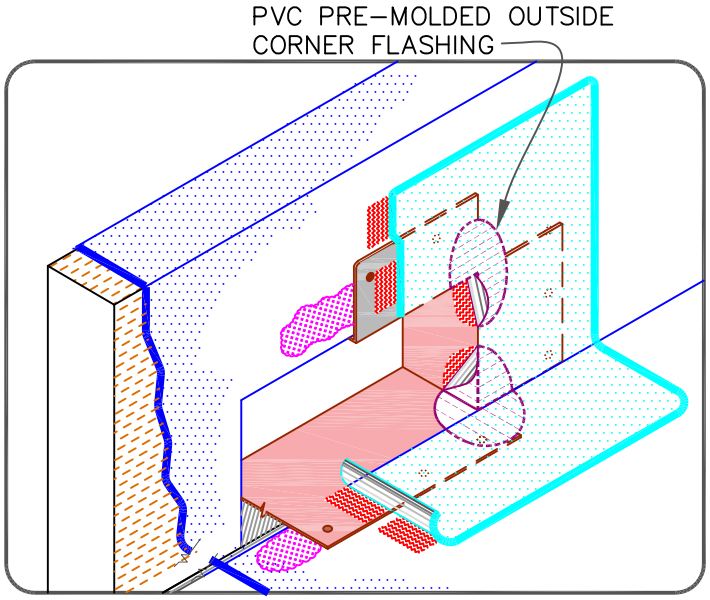

VERSICO ROOFING SYSTEMS
© 2024 VERSICO

PREFABRICATED SCUPPER WITH PVC COATED METAL

MAXIMUM WARRANTY: 30 YEARS

→ PVC/PVC KEE MEMBRANE
→ APPROVED SUBSTRATE
0 → SEE NOTE
PS (PRESSURE SENSITIVE)

TPC (Thermoplastic Common Details)

TPC–18.1

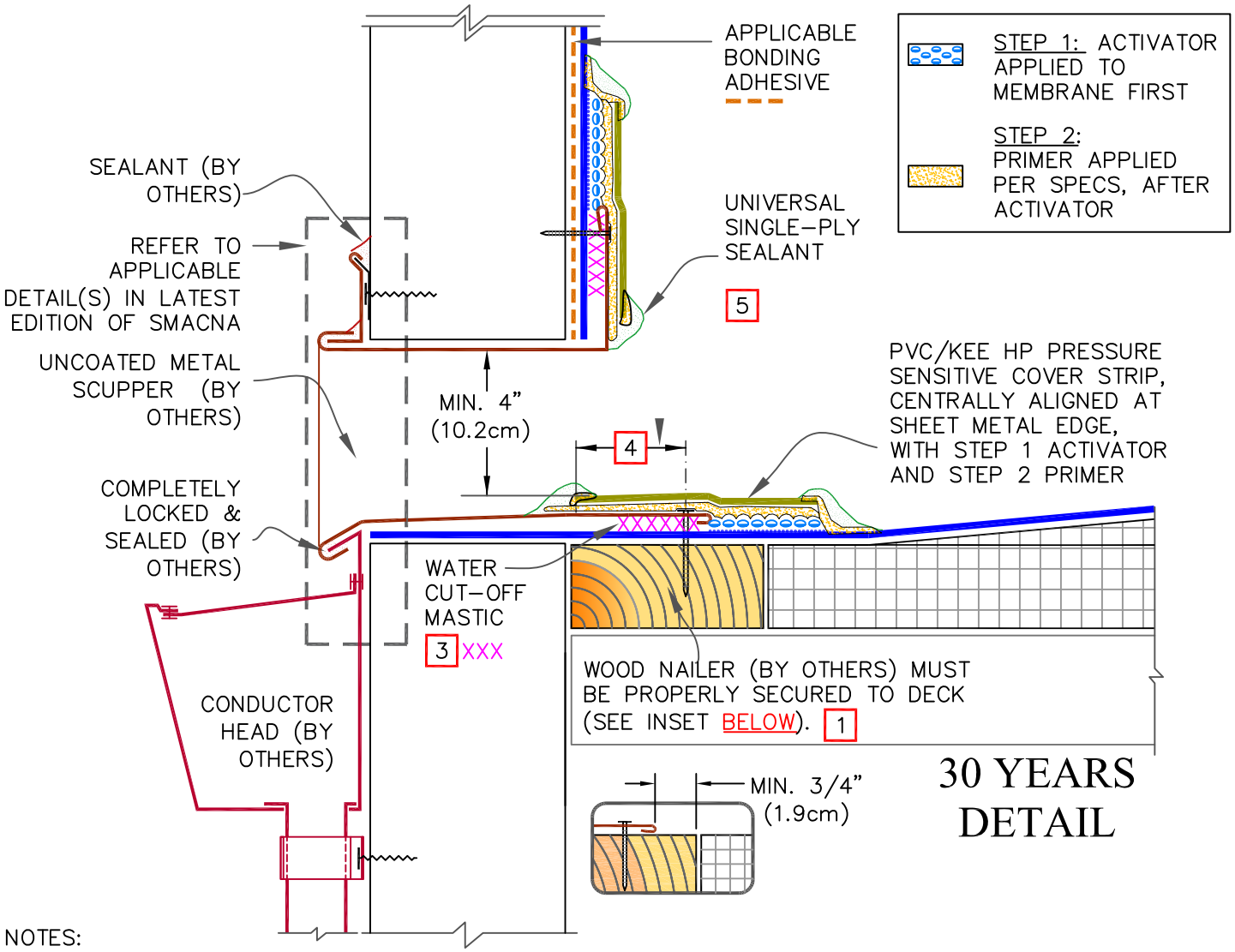

30 YEARS DETAIL

NOTES:

1. WOOD NAILERS ARE INSTALLED ONLY AT SCUPPERS TO SECURE METAL SLEEVE AND MUST EXTEND PAST THE WIDTH OF METAL SLEEVE FLANGE.
2. METAL SCUPPER BOX MUST HAVE CONTINUOUS FLANGES WITH ROUNDED CORNERS, SOLDER ALL SCUPPER SEAMS WATER-TIGHT.
3. WATER CUT-OFF MASTIC UNDER SCUPPER FLANGE MUST BE UNDER CONSTANT COMPRESSION.
4. PRESSURE SENSITIVE COVER STRIP MUST EXTEND A MINIMUM 2" (5cm) COVERAGE PAST NAIL HEAD.
5. UNIVERSAL SINGLE-PLY SEALANT IS REQUIRED AT FLASHING EDGES ON SCUPPER EDGE. PVC STEP 2 PRIMER MUST BE USED TO PREPARE SURFACES PRIOR TO THE APPLICATION OF SEALANT.

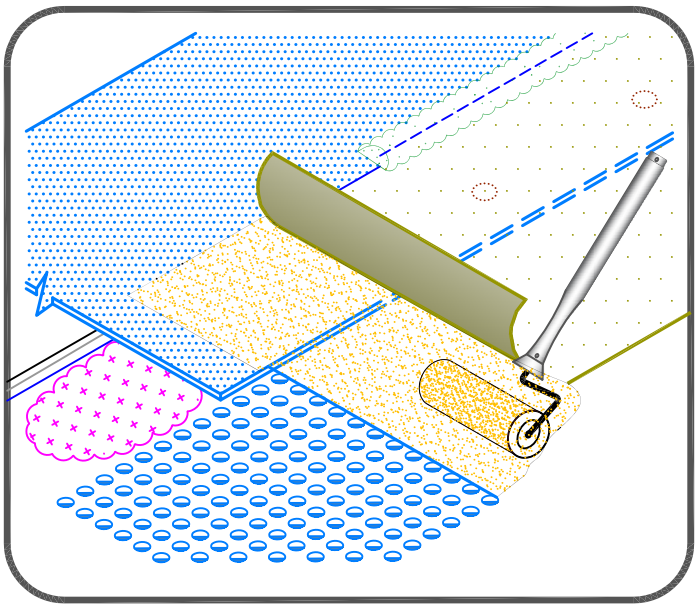

VERSICO ROOFING SYSTEMS
© 2024 VERSICO

SCUPPER WITH UNCOATED METAL, PAGE 1 OF 2

→ PVC/PVC KEE MEMBRANE
→ APPROVED SUBSTRATE
0 → SEE NOTE
PS (PRESSURE SENSITIVE)

TPC (Thermoplastic Common Details)

TPC-18.2

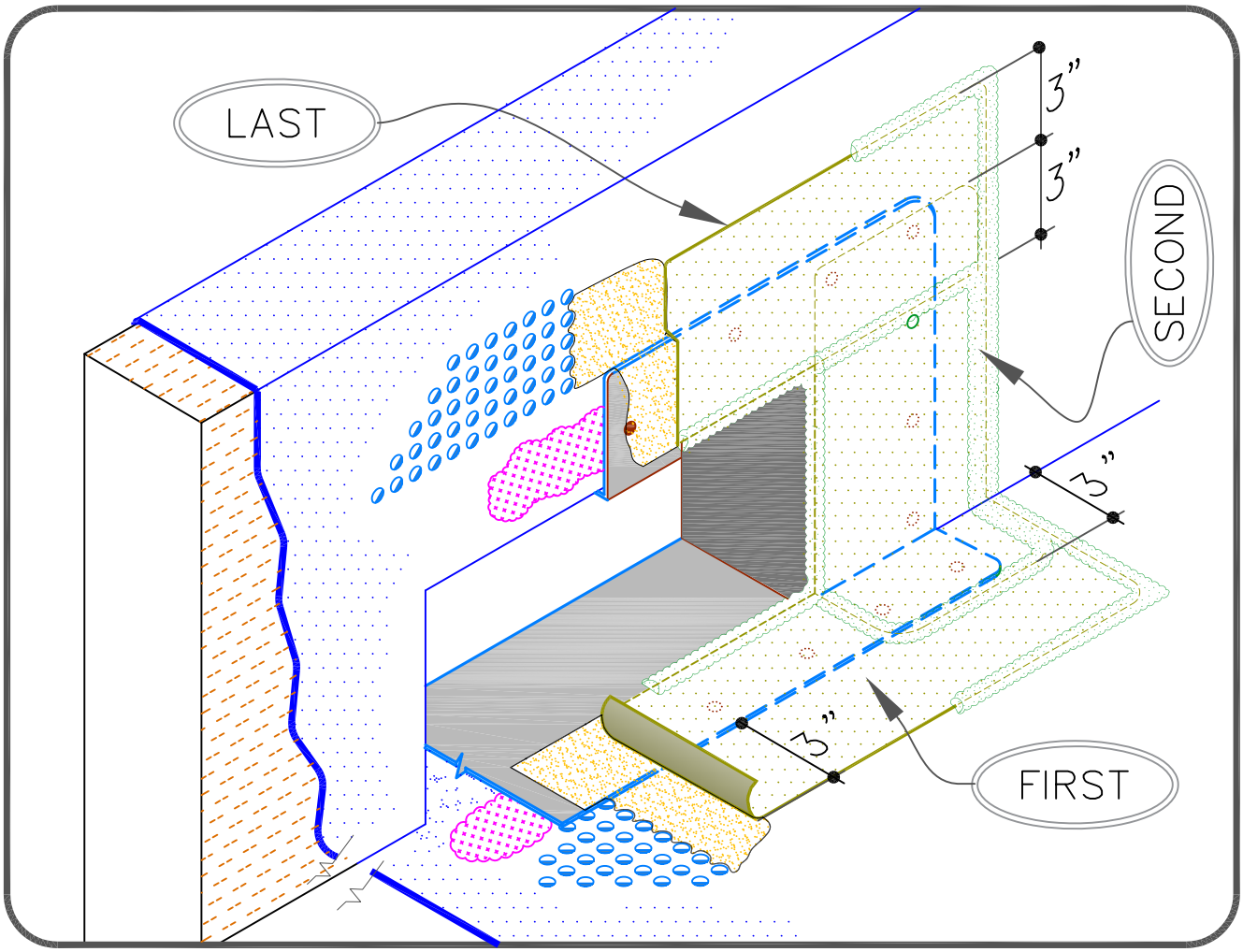

30 YEARS DETAIL

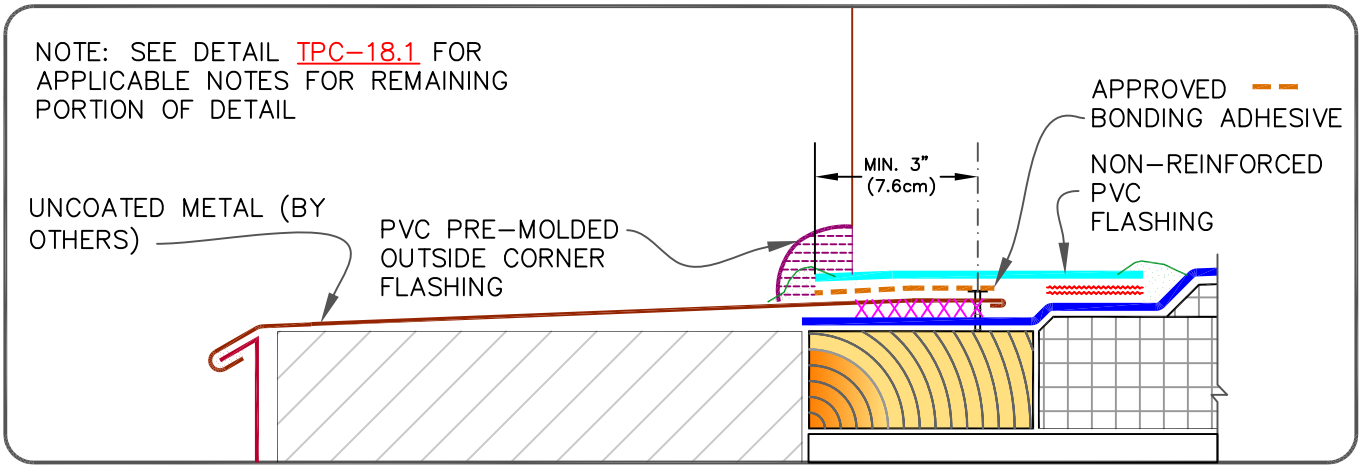

OPTION FOR 20 YEARS DETAIL

VERSICO ROOFING SYSTEMS
© 2024 VERSICO

SCUPPER WITH UNCOATED METAL, PAGE 2 OF 2

→ PVC/PVC KEE MEMBRANE
→ APPROVED SUBSTRATE
0 → SEE NOTE
PS (PRESSURE SENSITIVE)

TPC (Thermoplastic Common Details)

TPC–18.2

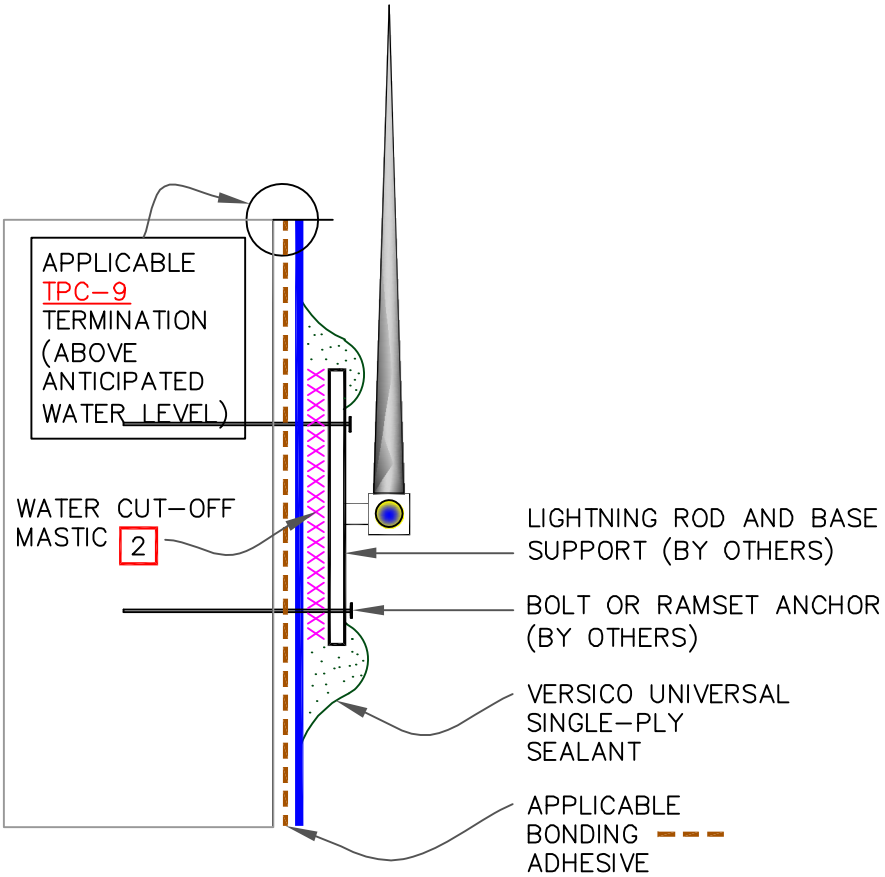

NOTES:

1. DETAIL MAY BE USED FOR ANY FASTENER PENETRATION (E.G., ACCESS LADDER, ANCHOR SUPPORT TO PARAPET).
2. WATER CUT–OFF MASTIC MUST BE UNDER CONSTANT COMPRESSION.
3. DETAIL UNACCEPTABLE FOR HORIZONTAL APPLICATION ON ROOF DECK.
4. COMPLY WITH ZONING ORDNANCE AND LOCAL CODES FOR MOUNTING A LIGHTNING SYSTEM.

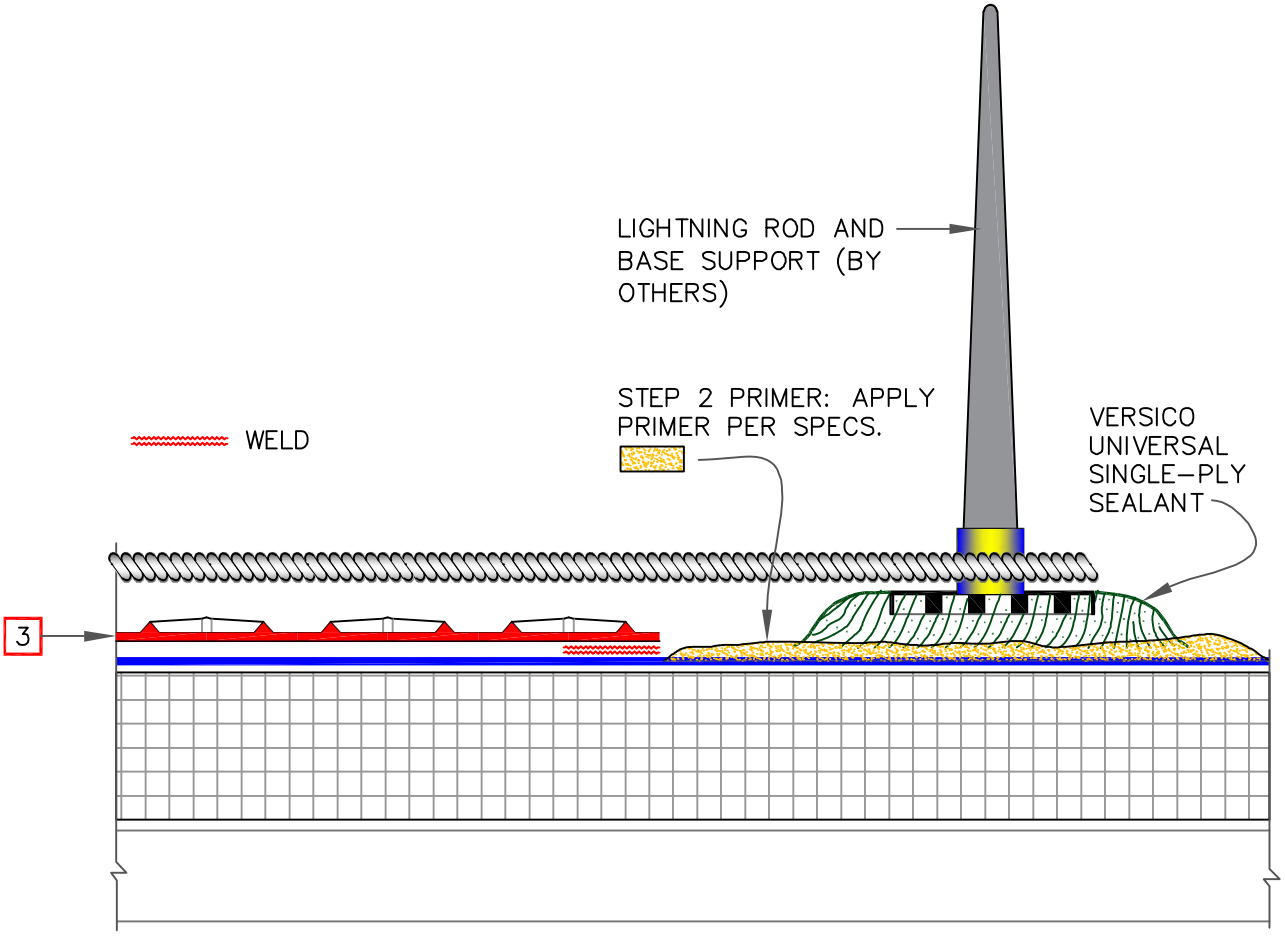

NOTES:

1. CLEAN EXPOSED MEMBRANE SURFACE WITH WEATHERED MEMBRANE CLEANER AND ALLOW TO DRY.
2. COMPLY WITH ZONING ORDNANCE AND LOCAL CODES FOR MOUNTING A LIGHTNING SYSTEM.
3. TO AVOID SURFACE ABRASION, PIECES OF WALK-WAY PADS SHOULD BE WELDED UNDERNEATH THE BRAIDED WIRES. ENSURE, WATER FLOW IS NOT RESTRICTED AND PROVIDE PROPER GAPS.

EXAMPLE: BRAIDED WIRE IN CERTAIN COUNTRIES

VERSICO ROOFING SYSTEMS
© 2024 VERSICO

LIGHTNING ROD AT DECK LEVEL

MAXIMUM WARRANTY: 30 YEARS

PVC/PVC KEE MEMBRANE
APPROVED SUBSTRATE
0 SEE NOTE
PS (PRESSURE SENSITIVE)

TPC (Thermoplastic Common Details)

TPC-20.2

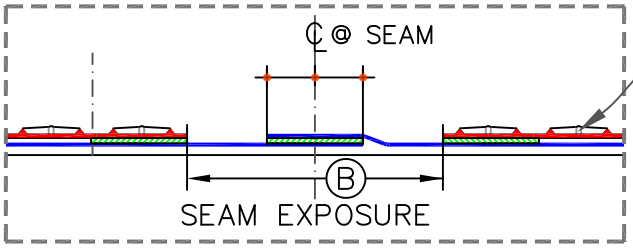

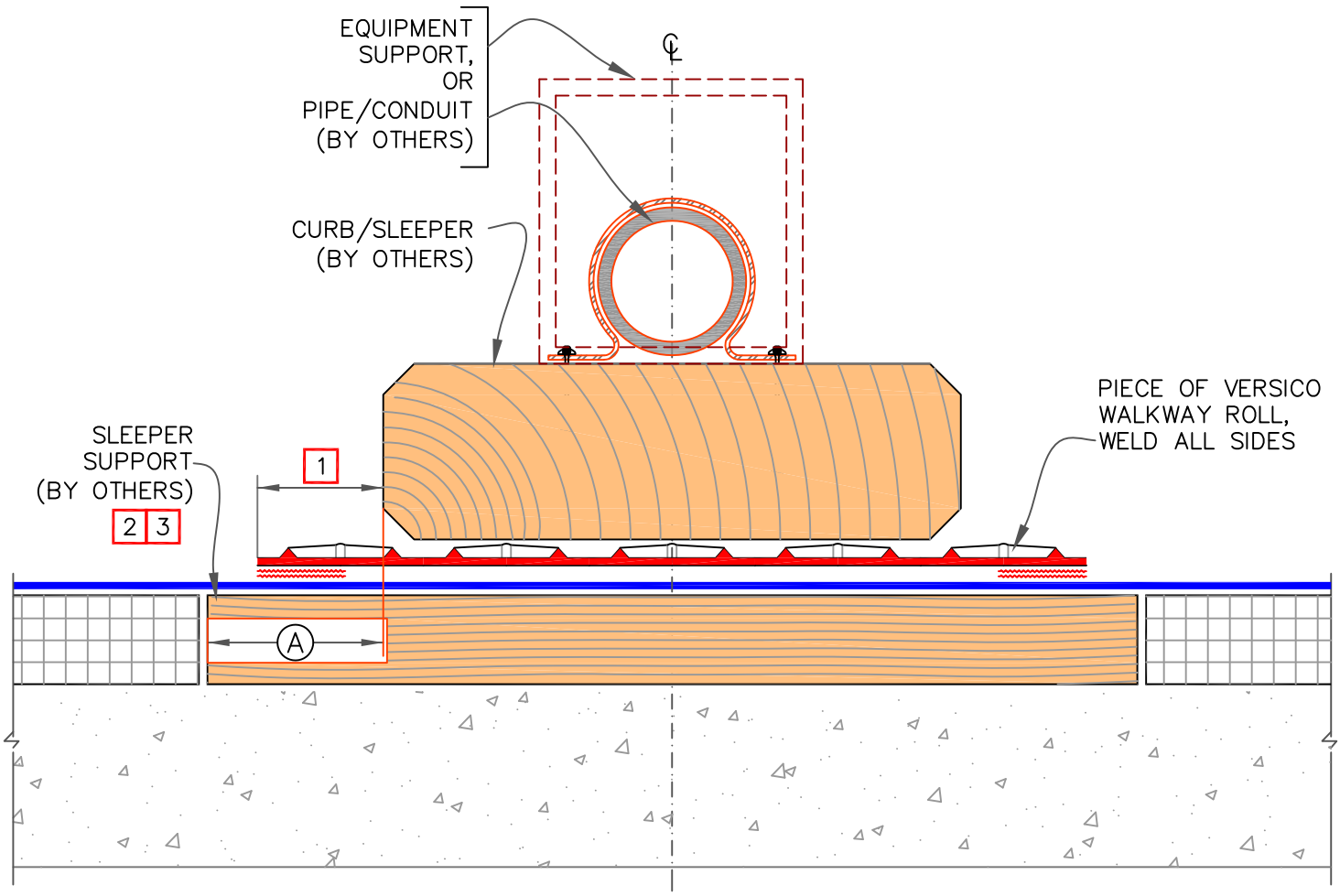

NOTES:

1. SLEEPER MUST BE LARGE ENOUGH TO SUPPORT WEIGHT OF EQUIPMENT WITHOUT INDENTING INSULATION. EXTEND SLEEPER OUT AS REQUIRED BY STRUCTURAL ENGINEER TO DISTRIBUTE SUBJECT LOAD OR AT LEAST EXTEND OUT MIN. 3" (7.5cm).
2. ENSURE SCREW/ANCHOR HEADS IN TOP SURFACE OF WOOD BLOCKING ARE RECESSED TO PROTECT MEMBRANE.
3. SLEEPER SUPPORT NOT REQUIRED UNDER CONDUIT OR PIPE SUPPORTS.
4. CONSULT STRUCTURAL ENGINEER AND/OR SPECIFIER TO AVOID WATER PONDING DUE TO DECK DEFLECTION.
5. RAISE CONDUITS AND PIPES ABOVE THE REGIONAL SNOW LINE WHEN SLOPE OF THE ROOF CAN LEAD TO SLIDING SNOW.

DIMENSIONS		cm	
A	3"	7.5	MIN. ALL SIDES
B	8"	20	

WELD

VERSICO ROOFING SYSTEMS
© 2024 VERSICO

SLEEPER

MAXIMUM WARRANTY: 30 YEARS

PVC/PVC KEE MEMBRANE
APPROVED SUBSTRATE
0 → SEE NOTE
PS (PRESSURE SENSITIVE)

TPC (Thermoplastic Common Details)

TPC–24

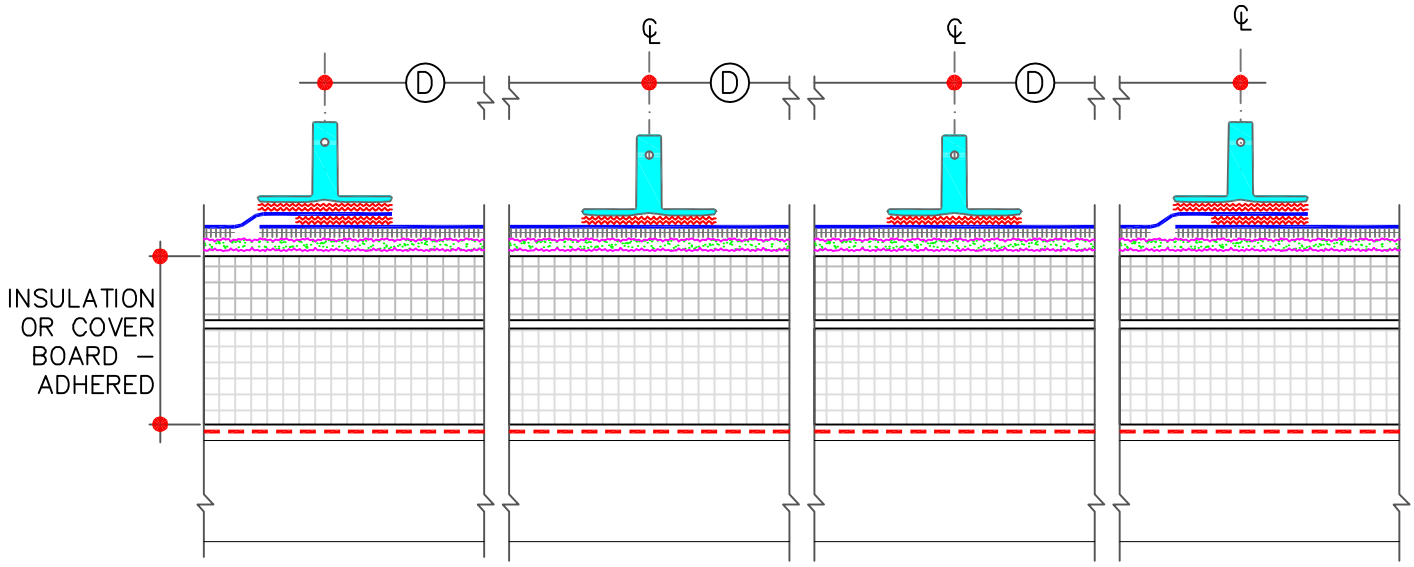

SECTION AA: CONTOUR RIB PROFILE

CONTOUR RIB		
DIMENSIONS		cm
A	1–3/4"	4.5
B	1–1/4"	3
C	1/2"	1
D	VARIES	

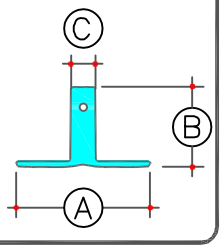

PVC REINFORCED MEMBRANE

APPROVED ADHESIVE

HOT AIR WELD (REFER TO SPECS)

AIR/VAPOR BARRIER (WHERE REQUIRED)

VERSICO ROOFING SYSTEMS

© 2024 VERSICO

VERSIFLEX PVC RIB: TYPICAL PROFILE

MAXIMUM WARRANTY: 30 YEARS

PVC/PVC KEE MEMBRANE

APPROVED SUBSTRATE

0 SEE NOTE

PS (PRESSURE SENSITIVE)

TPC (Thermoplastic Common Details)

TPC–25.1

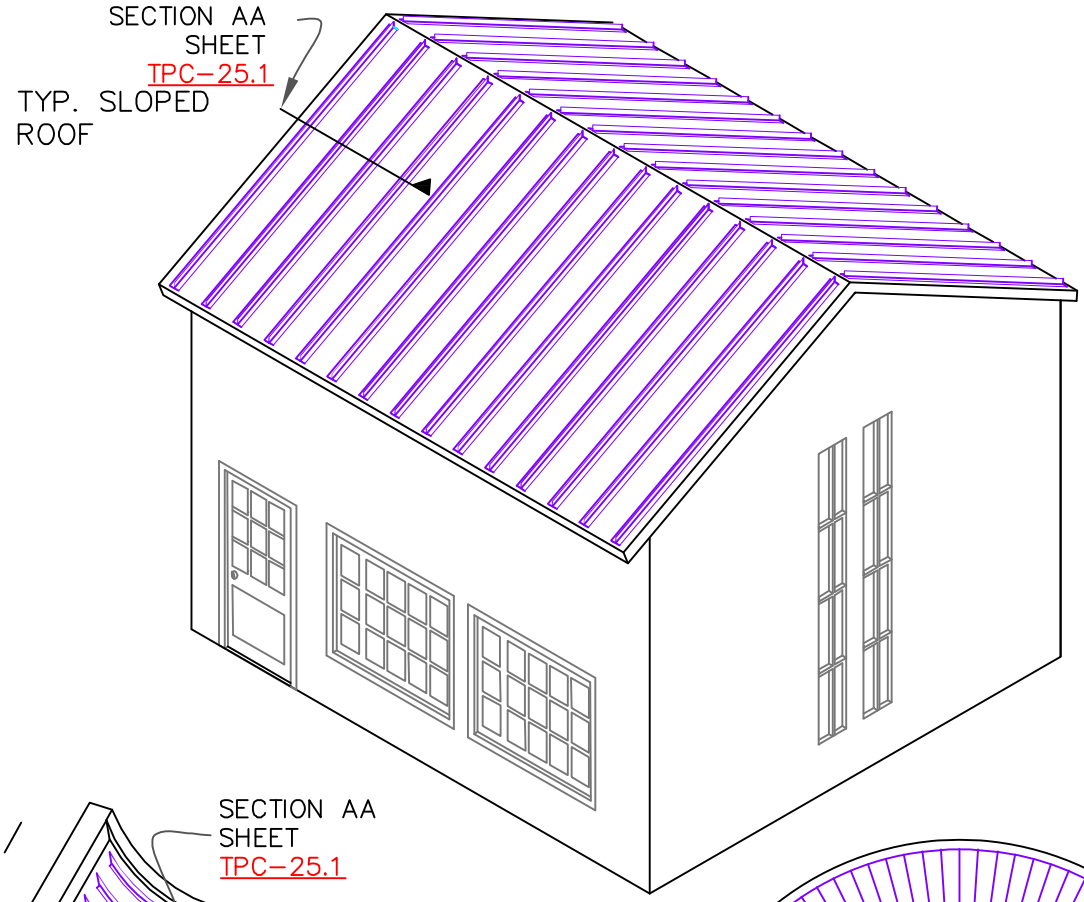

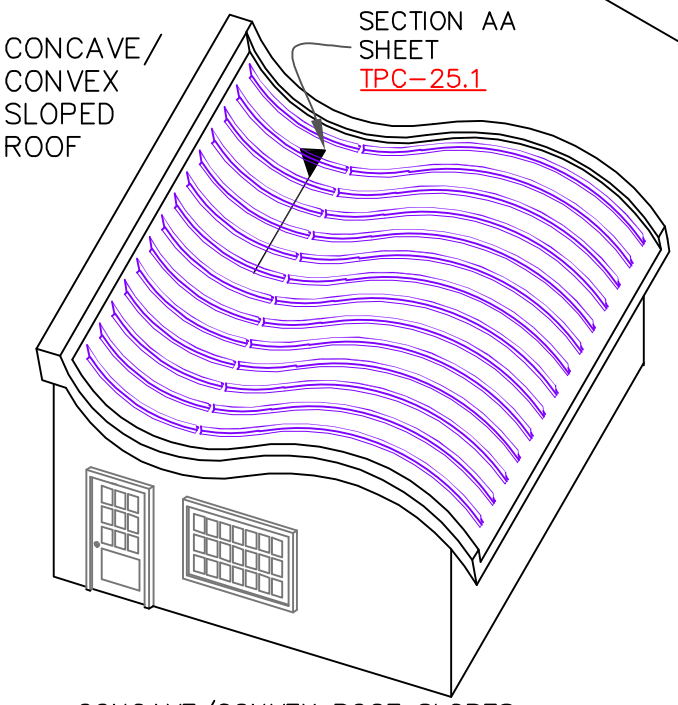

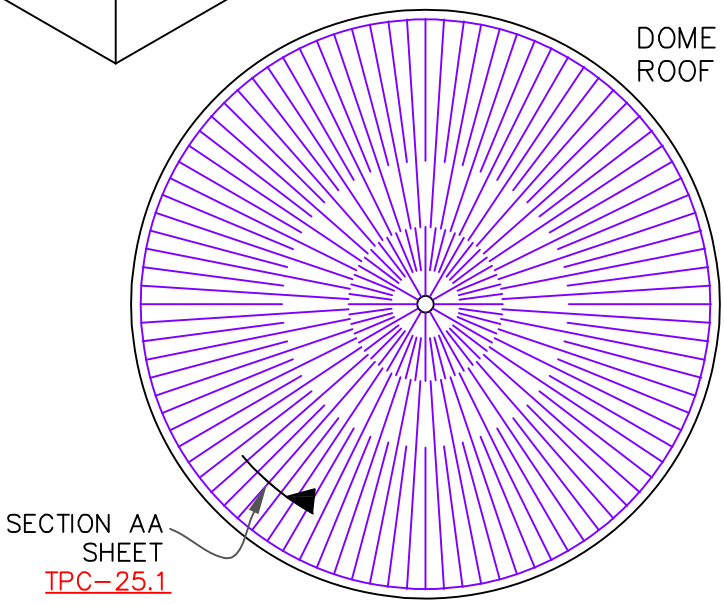

CONCAVE/CONVEX ROOF SLOPES

AT COMPLEX GEOMETRIC SHAPES, WITH MULTI–DIRECTIONAL SLOPES, THE SHEET METAL ROOF IS NOT ONLY DIFFICULT TO INSTALL, BUT THE WATER–SHEDDING ABILITY OF METAL ROOF IS SERIOUSLY HAMPERED WITHIN THE CONCAVE (NEGATIVE) SLOPES. THE WATERPROOFED ROOF MEMBRANE WITH THE CONTOUR RIB IS A PRACTICAL SOLUTION.

TYPICAL PLAN OF DOME ROOF

WHERE CONCENTRATION OF STANDING SEAMS NEAR CENTER IN METAL SYSTEM IS EXTREMELY HARD TO FABRICATE & INSTALL, THE CONTOUR RIB INSTALLATION IS EXTREMELY SIMPLE & EASY TO INSTALL.

VERSICO ROOFING SYSTEMS
© 2024 VERSICO

VERSIFLEX PVC RIB: VARIOUS APPLICATIONS

MAXIMUM WARRANTY: 30 YEARS

→ PVC/PVC KEE MEMBRANE
→ APPROVED SUBSTRATE
0 → SEE NOTE
PS (PRESSURE SENSITIVE)

TPC (Thermoplastic Common Details)

TPC–25.2

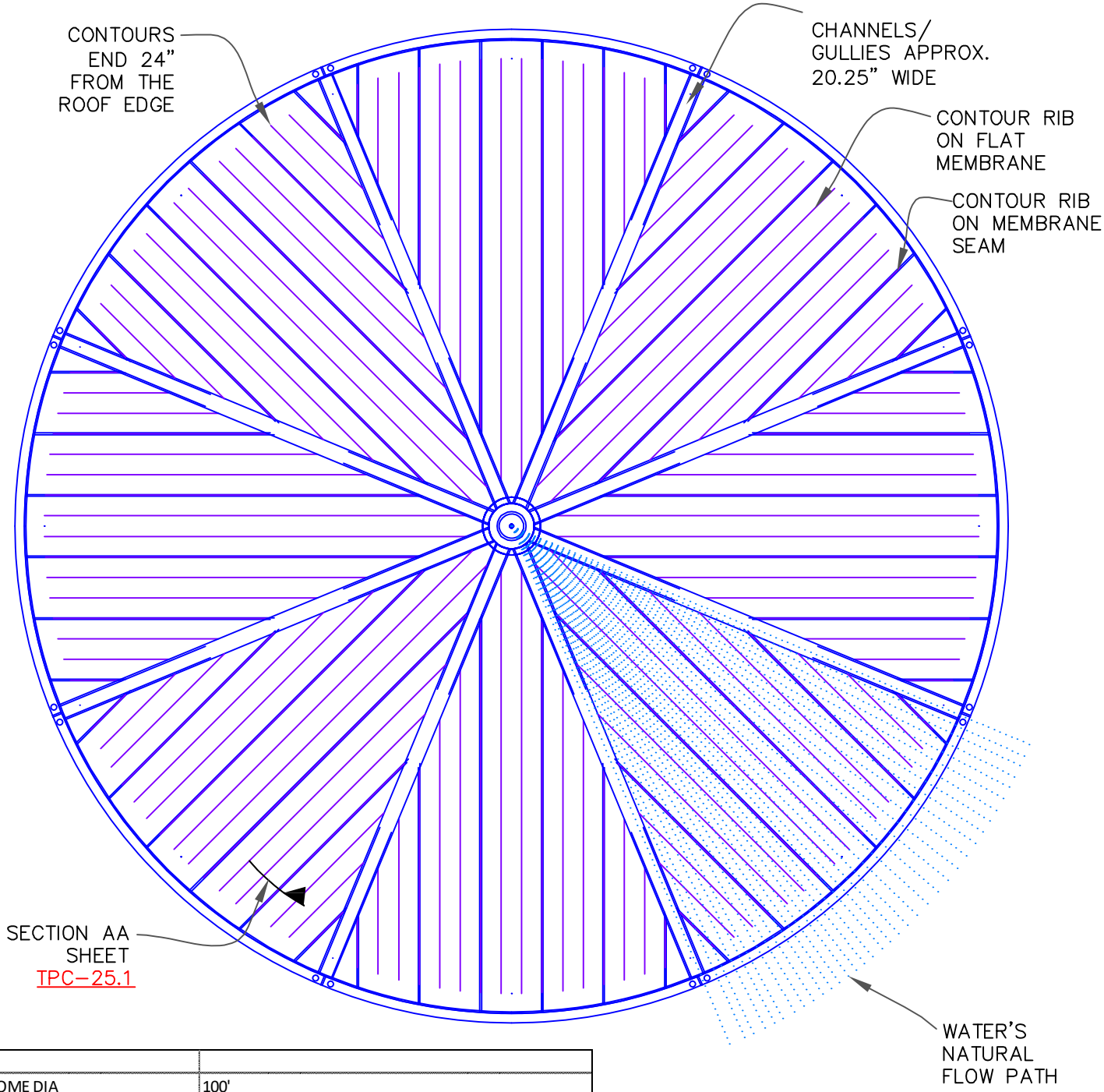

DOME	
TYP. DOME DIA	100'
DOME AREA	8,550 S.F.
MEMBRANE	
ROLL WIDTH	81"
MEMBRANE SEAM WIDTH	2"
WELDED PORTION	1.5"
CHANNELS/GULLIES	PERFECTLY CUT 1/4TH WIDTH OF 81" ROLL (20.25")
APEX POINT	PERFECTLY CUT CIRCULAR SHAPE AS DESIGNED, APPRX. 37" DIA SHOWN
CONTOUR RIBS	
CONTOUR RIBS O.C.	26.333"
TOTAL LENGTH OF CONTOUR RIBS ON ENTIRE 100 DIA DOME	3256 LINEAR FEET (ADD % FOR DOME CURVE)

TYPICAL EXAMPLE OF 100' DIAMETER DOME ROOF PLAN SHOWS 81" WIDE ROLLS SHOWING CONTOUR RIBS @ 26" O.C.

NOTE: APEX MAY BE DESIGNED WITH SELF-CLEANSING ZINC STRIPS TO CUT DOWN STAINING AROUND LIGHTNING ROD ARRESTOR

VERSICO ROOFING SYSTEMS

© 2024 VERSICO

VERSIFLEX PVC RIB: EXAMPLE OF DOME WITH RIBS ALIGNED OVER MEMBRANE SEAMS

MAXIMUM WARRANTY: 30 YEARS

→ PVC/PVC KEE MEMBRANE
→ APPROVED SUBSTRATE
0 → SEE NOTE
PS (PRESSURE SENSITIVE)

TPC (Thermoplastic Common Details)

TPC-25.3

VERSIFLEECE ROOFING SYSTEMS

VERSIFLEECE TPO

VERSIFLEECE PVC

VERSIFLEECE KEE HP

Fully Adhered and Mechanically Fastened Roofing Systems

January 2024

TABLE OF CONTENTS

Part I – General **Page**

1.01 Description 3
1.02 Design Considerations 4
1.03 Quality Assurance 5
1.04 Submittals 6
1.05 Warranty 7

Warranty Tables

TABLE I – VersiFleece Adhered Systems Warranty Options 8
TABLE II –Underlayment and Fastening Density for Assemblies with Warranties Up to 20 YR 9
TABLE III –Underlayment and Fastening Density for Assemblies with Warranties - 25 YR 10
TABLE IV – Bead Spacing for VersiFleece Membrane Adhesion 11
TABLE V – Minimum Perimeter Width 11
1.06 Job Conditions 12
1.07 Product Delivery, Storage and Handling 13

Part II - Products

2.01 General 13
2.02 Membrane 13
2.03 Insulation/Underlayments 17
2.04 Related Materials 21
2.05 Fastening Components 26
2.06 Vapor/Air Barrier and Primers 27
2.07 Edgings and Terminations 27
2.08 Roof Walkways 29
2.09 Other Products 30

Part III - Execution

3.01 General 30
3.02 Roof Deck/Substrate Criteria 30
3.03 Insulation/Underlayment 32
3.04 Insulation Attachment 33
3.05 Membrane Placement and Securement Criteria 34
3.06 Heat Welding Procedures (VersiWeld TPO) 36
3.07 Welding Problems/Repairs 38
3.08 Flashings 39
3.09 Roof Walkways 42
3.10 Daily Seal 42

Attachment I – Direct Application Over Lightweight Insulating Concrete 43
Attachment II – Mechanically Attached Membrane Option 45
Attachment III – VersiFleece FR TPO Mechanically Attached Membrane Option 49
Attachment IV – VersiFleece RL EPDM/TPO/PVC RapidLock Membrane Option 55
Installation Details 71

Note: In addition to information listed in this section Specifiers and Authorized contractors should reference Spec Supplement and Design Reference Sections for other pertinent information.

This page intentionally blank

VersiFleece TPO
VersiFleece PVC / VersiFleece FRS PVC
VersiFleece KEE HP / VersiFleece KEE HP
Fully Adhered and Mechanically Fastened Roofing Systems

January 2024

The information contained in this generic specification represents a part of Versico's requirements for obtaining a roofing systems warranty. Construction materials and practices, building siting and operation, climatic conditions, and other site-specific factors will have an impact on the performance of the roofing system. Versico recommends that the building owner retain a design professional to determine appropriate design measures to be taken in order to address these factors.

This section is to serve as criteria for Specifiers and Authorized Contractors regarding the design and installation of Versico's Fully Adhered VersiFleece Membrane Roofing Systems. Additional information essential for the design and installation of the roof system mentioned herein are also included in the Design Reference Section and also listed in the form of a Specification Supplement at the end of the Technical Manual. Specifiers and Authorized Contractors are advised to reference all applicable sections.

Various Warranty Tables have been included in Paragraph 1.05 citing various requirements by which specific warranty coverage can be obtained. Appropriate Warranty Table should be referenced to ensure proper warranty coverage.

PART I - GENERAL

1.01 Description

Versico's VersiFleece Fully Adhered Roofing Systems utilizes VersiWeld® TPO or VersiFlex™ PVC or KEE HP PVC membrane laminated to non-woven polyester fleece backing.

A. **Fully Adhered Roofing Systems**

1. **VersiFleece TPO Fully Adhered Roofing System** incorporates 45, 60 or 80-mil thick, 12' or 6' wide, scrim-reinforced, white, gray, tan or Special Color TPO (60-mil only) VersiWeld Thermoplastic Polyolefin (TPO) membrane laminated to a 55-mil thick non-woven polyester fleece-backing resulting in a total finished sheet thickness of 100, 115 or 135-mils.

2. **VersiFleece FRS PVC Fully Adhered Roofing System** incorporates 60 or 80-mil thick, 10' wide, fiberglass reinforced scrim (white, gray, light gray and tan) VersiFlex Polyvinyl Chloride (PVC) membrane laminated to a 55-mil thick non-woven polyester fleece-backing resulting in a total finished sheet thickness of 115 or 135-mils.

3. **VersiFleece PVC Fully Adhered Roofing System** incorporates 60 or 80-mil thick, 10' wide, polyester reinforced scrim (white, gray, light gray, slate gray and tan) VersiFlex Polyvinyl Chloride (PVC) membrane laminated to a 55-mil thick non-woven polyester fleece-backing resulting in a total finished sheet thickness of 115 or 135-mils.

4. **VersiFleece KEE HP Fully Adhered Roofing System** incorporates 50, 60 or 80-mil thick, 10' wide, polyester reinforced scrim, (white, gray, light gray, slate gray and tan) VersiFlex KEE HP Polyvinyl Chloride (PVC) membrane laminated to a 55-mil thick non-woven polyester fleece-backing resulting in a total finished sheet thickness of 105, 115 or 135-mils.

   NOTE: The membrane is fully adhered to an acceptable substrate with a spray, extrusion or splatter applied, two-component, low-rise Flexible DASH or HydroBond Adhesive. Adjoining sheets of VersiFleece membrane are overlapped and joined together with a minimum 1-1/2" wide hot air weld.

   NOTE: VersiFleece TPO is available with APEEL Protective Film, refer to PART II – PRODUCTS.

   NOTE: VersiFleece FR TPO membrane is also available for mechanically fastened systems over combustible decks – see 'Attachment III – VersiFleece FR TPO Mechanically-Fastened Membrane Option' at the end of this specification.

NOTE: VersiFleece RL (RapidLock) EPDM/TPO/PVC membrane is also available in a non-adhesive system utilizing Velcro® Brand Securable Solutions - see 'Attachment IV – VersiFleece RL EPDM/TPO/PVC Membrane Option' at the end of this specification.

B. **Mechanically Attached Roofing System**

1. **VersiFleece TPO/PVC Mechanically Attached Roofing System** as an option to fully adhering the VersiFleece Membrane with Flexible DASH Adhesive, the membrane may be loose laid and mechanically attached over an approved substrate to an acceptable deck minimum 22 ga. steel deck or wood deck refer to Attachment II in this specification.

1.02 General Design Considerations

A. Projects with extended wind speed warranty coverage greater than 90 mph and projects requiring a 20-year or greater Total System Warranty and projects which have building control and/or expansion joints will require additional enhancements. Refer to Warranty Tables in Paragraph 1.05.

B. There are no maximum slope restrictions for the application of this roofing system.

C. Chemical compatibility will depend on type of membrane used. Versico should be contacted for verification of compatibility with specific products, chemicals or waste products that may come in contact with the roof membrane.

D. It is the responsibility of the specifier to review local, state and regional codes to determine their impact on this VersiFleece Roofing System.

E. It is the responsibility of the building owner or his/her designated representative to verify structural load limitation. In addition, a core cut may be taken to verify weight of existing components when the roofing system is to be specified on an existing facility.

F. Coordination between various trades is essential to avoid unnecessary rooftop traffic over completed sections of the roof and to prevent possible damage to the membrane roofing system and insulation facer.

G. Concentrated loads from rooftop equipment may cause deformation of insulation/underlayment and possible damage to the membrane if protection is not provided. At protection course or sleepers must be specified.

H. Drainage

1. Drainage must be evaluated by the specifier in accordance with all applicable codes. Slopes may be provided by tapering the structure or through the use of tapered insulation; a sufficient number of roof drains should also be specified and properly located to allow for positive drainage. Significant ponding that could remain after 48 hours should be eliminated with the addition of auxiliary drains in low areas where ponding is anticipated.

Versico specifically disclaims responsibility for design of and selection of an adequate drainage system and drain accessories. Selection must be made by the building owner or owner's design professional.

2. Small incidental areas of ponded water will not impact the performance of this roofing system; however in accordance with industry standards, the roofing assembly should be designed to prevent ponding of water on the roof for prolonged periods (longer than 48 hours). Good roofing practice dictates proper drainage to prevent possible excessive live loads and, in the event of a roof leak, to minimize potential interior damage to the roofing assembly and to the interior of the building.

3. For roofing systems utilizing white membranes, a slope greater than 1/8" per horizontal foot is recommended to serve the long-term aesthetics.

4. Tapered edge strips, crickets or saddles are recommended where periodic ponding of water may occur.

I. On new construction projects, especially in cold climate regions, moisture generated due to the construction process could adversely impact various components within the roofing assembly if not addressed. **Refer to** Design Reference DR-01-21 "Construction Generated Moisture" **included in the Versico Technical Manual.**

J. Vapor Retarders

1. Versico does not require a vapor retarder for the protection of the membrane; however, it should be considered by the specifier for the protection of the roofing assembly (i.e. primarily insulation, underlayment and adhesives).

The following criteria should be considered by the specifier:

2. Use of a vapor retarder to protect insulation and reduce moisture accumulation within an insulated roofing assembly, should be investigated by the specifier.

3. In the generally temperate climate of the United States, during the winter months, water vapor flows upward from a heated, more humid interior toward a colder, drier exterior. Vapor retarders are more commonly required in northern climates than in southern regions, where downward vapor pressure may be expected and the roofing membrane itself becomes the vapor retarder.

K. On structural concrete decks, when a vapor retarder is not used, gaps in the deck along the perimeter and around penetrations must be sealed along with vertical joints between tilt-up panels, if present, to prevent infiltration of hot humid air and possible moisture contamination resulting from condensation. This is specifically important when adhesive is used to attach the roof insulation.

CAUTION: If left unaddressed, collected moisture could weaken insulation boards and facers resulting in a blow-off or increase the probability of mold growth.

L. Retrofit – Recover Projects (When the existing roofing material is left in place)

1. The removal of existing wet insulation and membrane must be specified. The specifier shall select an appropriate and compatible material as a filler for voids created by removal of old insulation or membrane.

2. On existing built-up roof where partial removal is specified to remove wet or damaged insulation, priming the structural deck, with a Versico primer, is required where residual asphalt is present to ensure adequate adhesion of the new insulation. In lieu of priming and the use of insulation adhesion, insulation used to fill voids or to replace wet sections may be mechanically attached.

3. Entrapment of water between old and new membrane can damage and deteriorate new insulation/underlayment between the two membranes. If a vapor retarder or air barrier is not specified, Versico recommends existing membrane be perforated to avoid potential moisture accumulation to allow for detection of moisture to enable the building owner to take corrective action. This can be accomplished by drilling approximately 3/4" diameter holes every 100 square feet in the existing built-up roof or single-ply membrane (excluding PVC membrane).

4. Existing non-reinforced PVC membrane must be totally removed. If not removed it must be cut into maximum 10’ by 10’ sections and the new membrane underlayment must be mechanically attached. Flashing must be totally removed.

5. When Specifying this roofing system over existing gravel surfaced built-up roof, loose gravel must be removed to avoid the entrapment of moisture. In all cases, a membrane underlayment is required. Refer to Paragraph 3.02G, Insulation/Substrate Requirements, for minimum thickness of acceptable underlayment.

6. Existing Phenolic Foam insulation must be removed prior to the installation of this roofing system.

7. Refer to Section 3.02 for more information about securement of existing roof.

1.03 Quality Assurance

Building codes are above and beyond the intended purpose of this specification. The building **owner, owner’s representative** or **Specifier** should verify local codes for applicable requirements and limitations. It is the responsibility of the specifier to review local, state and regional codes to determine their impact on the specified Versico Roofing System.

NOTE: For code approvals achieved with the Versico VersiFleece Roofing Systems, refer to the Versico VersiFleece Code Approval Guide, DORA (Directory of Roof Assemblies), Factory Mutual (FM) Approval Guide or Underwriters Laboratories (UL) Fire Resistance or Roofing Materials and Systems Directories.

A. When recovering or retrofitting an existing roof system, the addition of new insulation (type and thickness) may alter the fire performance characteristics of the assembly. Building owners or their designated representatives shall consult the local code enforcement agency to avoid potential code violation.

B. Versico recommends the use of Versico supplied products for use with this Versico Roofing System. The performance or integrity of products by others, **when selected by the specifier and accepted as compatible by Versico**, is not the responsibility of Versico and is **disclaimed** by the Versico Warranty.

C. The specified roofing system must be installed by a Versico Authorized Roofing Contractor in compliance with drawings and specifications as approved by Versico.

D There must be no deviations made from Versico’s specification or Versico’s approved shop drawings without the

PRIOR WRITTEN APPROVAL of Versico.

E. After completion of the installation, upon request, an inspection shall be conducted by a Field Service Representative of Versico to ascertain that the membrane roofing system has been installed according to Versico's published specifications and details applicable at the time of bid. This inspection is to determine whether a warranty shall be issued. It is not intended as a final inspection for the benefit of the owner.

F. Provide polyisocyanurate insulation that meets PIMA Quality Mark Certified LTTR value through third party verification meeting ASTM C 1289, Type II, Class 1, Grade 2.

G. Solar reflectance of this roofing product may decrease over time due to environmental defacement such as dirt, biological growth, ponded water, etc. The roof should be monitored at regular intervals and maintained or cleaned when necessary to assure maximum solar reflectance.

H. Refer to the **Design Reference DR-07-23 "CRRC/LEED Information"** for information. (i.e. solar emittance, solar reflectance and recycled content.)

1.04 Submittals

A. To ensure compliance with Versico's minimum warranty requirements, the following projects should be forwarded to Versico for review prior to installation, preferably prior to bid.

1. Air pressurized buildings, canopies, and buildings with large openings where the total wall openings exceed 10% of the total wall area on which the openings are located (such as airport hangars, warehouses and large maintenance facilities). Refer to Attachment IV at the end of this section for perimeter considerations, when a Mechanically Attached System is specified.

2. Cold storage buildings and freezer facilities.

3. Fully Adhered Roofing System projects over 100' in height.

4. Mechanically Attached Roofing System projects over 50' in height.

5. Projects where the TPO membrane is expected to come in direct contact with petroleum-based products, waste products (i.e., grease, oil, animal fats, etc) and other chemicals.

6. Projects where hot asphalt is specified for insulation attachment.

7. If a Mechanically Attached membrane securement option is selected in lieu of the use of adhesive, projects specified with a fastener length exceeding 12 inches.

B. Shop drawings must be submitted to Versico by the Versico Authorized Roofing Contractor along with a completely executed Copy-A Job Approval Request. Approved shop drawings are required for inspection of the roof and on projects where on-site technical assistance is requested.

Shop drawings must include:

1. Outline of roof and size
2. Deck type (for multiple deck types)
3. Location and type of **all** penetrations
4. Perimeter and penetration details
5. Key plan (on multiple roof areas) with roof heights indicated

C. When field conditions necessitate modifications to the originally approved drawings, a copy of the shop drawing outlining all modifications must be submitted to Versico for revision and approval prior to inspection and warranty issuance.

D. **As Built Projects** (roofing systems installed prior to project approval by Versico)

The Versico Authorized Contractor may supply Versico with an As-Built drawing for projects completed prior to Versico's approval. The As-Built drawings:

1. Must conform to Versico's most current published specification and details applicable at the time of bid.
2. Must be submitted along with a completely executed Copy-B Job Completion.
3. Must include the items identified in Paragraph 1.04B.

NOTE: As-Built projects are not recommended for those projects referenced in Paragraph 1.04A in order to ensure

Versico Warranty requirements have been met.

E. **Copy-B Job Completion**

After project completion, a Copy-B Job Completion must be submitted to Versico to schedule the necessary inspection and acceptance of the project prior to issuance of the Versico warranty.

1.05 Warranty

A. A Total System Warranty is available for roofing systems on commercial buildings within the United States and applies only to **products manufactured or marketed by Versico**. The total system is defined as membrane, flashings, adhesives, sealants and other Versico brand products utilized in the installation. For a complete description of these products, refer to the Part 2 "Products" Section in this Specification and **Spec Supplement "Related Products" P-01-22**.

B. See Tables Below for information regarding Warranted Systems and Design Criteria:

1. **TABLE I – Minimum Membrane Thickness for Various Warranty Options** Identifies minimum membrane thickness for membranes used in fully adhered roofing systems**.**

2. **TABLE II - Underlayment and Fastening Density for Assemblies with Warranties Up to 20 Yrs** Identifies required underlayments for fully adhered roofing systems with Warranties up to 20 year based on the various wind speed coverages available. The Table also identifies fastening density or adhesive bead spacing and required edge terminations.

3. **TABLE III – Underlayment and Fastening Density for Assemblies with Warranties - 25 to 30 YR** Identifies required underlayments for fully adhered roofing systems with Warranties from 25 to 30 year based on the various wind speed coverages available. The Table also identifies fastening density or adhesive bead spacing and required edge terminations.

4. **TABLE IV – Bead Spacing for VersiFleece Membrane Adhesion** Identifies required bead spacing for field and perimeter sheets for available warranty duration and warranty wind speed coverages.

5. **TABLE V – Minimum Perimeter Width** Identifies required minimum perimeter sheet widths for various building heights.

Table I **VersiFleece Adhered Systems Warranty Options**

Max Warranty Duration	Minimum Membrane Thickness	Warranty Wind Speed			Additional Hail Coverage (4)		
		55, 72 or 80 mph	90 or 100 mph	110 or 120 mph	1" Dia. Hail	2" Dia. Hail	3" Dia. Hail
5,10, or 15 year	VersiFleece TPO 100-mil	√	√	√	√	√ (1)	N/A
	VersiFleece PVC 115-mil (3)	√	√	√	√	√ (1)	N/A
	VersiFleece KEE HP 105-mil	√	√	√	√	√ (1)	N/A
20 year	VersiFleece TPO 115-mil	√	√	√	√	√	√ (1)
	VersiFleece PVC 115-mil (3)(5)	√	√	√	√	√ (1)	N/A
	VersiFleece KEE HP 105-mil	√	√	√	√	√ (1)	N/A
25 year	VersiFleece TPO 135-mil	√	√	√	√	√	√ (1)
	VersiFleece PVC 135-mil (3)(5)	√	√	√	√	√	√ (1)
	VersiFleece KEE HP 115-mil	√	√	√	√	√	√ (1)
30 year	VersiFleece TPO 135-mil	√	√	√	√	√	√ (1)
	VersiFleece KEE HP 135-mil	√	√	√	√	√	√ (1)

Notes: N/A = Not Acceptable √= Acceptable

General: Mechanical Fastened Assemblies using any of the above membranes are limited to a maximum warranty wind speed of 72 mph, refer to Attachment II.

1) Requires Flexible DASH in full coverage or beads spaced at 4” o.c.
2) Require Flexible DASH in full coverage or beads spaced at 4” o.c. Contact Versico for underlayment requirements.
3) VersiFleece PVC with Polyester or Fiberglass Reinforced Scrim (FRS).
4) Flexible DASH Splatter application (50% coverage or 1/2 gallon per 100 square feet) does not qualify for additional puncture or hail warranties.
5) VersiFleece PVC 115- or 135-mil membranes in Slate Gray are limited to Warranties Up to 20 Year.

Table II Underlayment and Fastening Density for Assemblies with Warranties Up to 20 YR

Other Requirements are Listed in Additional Design Considerations following this Table
All Versico Products listed for higher wind speed coverage can also be used for Warranties with lesser speed coverage. (i.e. 72 MPH underlayment may be used for 55 MPH underlayment)

Peak Gust Wind Speed Warranty	Minimum Membrane Underlayment (Versico Supplied Only)	Insulation/Underlayment Attachment			Metal Edging
		# of Fasteners per 4' x 8' board size (1)	Adhesive Ribbon Spacing for 4' x 4' and 4' x 8' size board (11)		
			Field	Perimeter	
55 or 72 MPH	1" (20-psi) Polyisocyanurate	16 (9)	6" (4	6" (4)	VersiTrim Drip Edge, VersiTrim 200 or 300
	1-1/2" (20-psi) Polyisocyanurate	10			
	2" (20 -psi) Polyisocyanurate	8			
	1/2" SecurShield HD (2)	12			
	1/4" DensDeck or 1/4" Securock	12			
80 MPH	1/2" SecurShield HD Plus (2)	8	6" (4)(6)	6" (4)(6)	VersiTrim Drip Edge, VersiTrim 200 or 300 (10)
	1/2" Versico Recovery Board (2)	16			
	2" SecurShield HD Composite	6			
	1/2" DensDeck or 1/2" Securock (2)	8			
	1-1/2" (25-psi) Polyisocyanurate	10			
	2" (20 -psi) Polyisocyanurate	8			
90 MPH	1/2" DensDeck or 1/2" Securock (2)	12	6" (8)	6" (6)(7)	VersiTrim Drip Edge (3), VersiTrim 2000 or 3000.
	1/2" SecurShield HD (2) or 1-1/2" (20-psi) SecurShield Polyiso	16			
	1/2" SecurShield HD Plus (2)	12			
	2" (20-psi) SecurShield Polyiso	8			
	1-1/2" DuraFaceR (OSB/Polyiso Composite) or 1/2" DuraStorm VSH (2)	8			
	2" SecurShield HD Composite	8	6" (4)(6)	6" (4)(6)	
	1-1/2" Insulfoam HD Composite	16			
100 MPH	2" (25-psi) SecurShield Polyiso (1)	16	FS	FS	VersiTrim Drip Edge (3), VersiTrim 2000 or 3000.
110 MPH	1-1/2" DuraFaceR (OSB/Polyiso Composite) or 1/2" DuraStorm VSH (2)	16	FS	FS	VersiTrim 2000 or 3000
	1/2" SecurShield HD Plus (2)				
120 MPH	5/8" DensDeck or 5/8" DensDeck StormX Prime or 5/8" Securock (2)	16	FS	FS	VersiTrim 2000 or 3000
	1-1/2" DuraFaceR (OSB/Polyiso Composite) (1) or 1/2" DuraStorm VSH (2)	17			
	1/2" SecurShield HD Plus (2)	24			
	2" SecurShield HD Composite	16			

FS = Full Spray, Equipment (Rig) Splatter or Ribbons @ 4" O.C.
(1) For Building heights between 51'-100', enhance 12'-wide perimeter with 50% more fasteners and plates.
(2) Cover boards must be installed over a min. 1" thick approved Versico Insulation.
(3) Versico HPV or HPVX Fasteners must be used to secure Versico Drip Edge or VersiTrim 200 Metal Fascia to perimeter wood nailers.
(4) Gravel Surface BUR - Field @ 6" O.C. / Perimeter @ 4" O.C
(5) Steel Decks - Field & Perimeter @ 6" O.C.
(6) Cementitious Wood Fiber - Field @ 6" O.C. / Perimeter @ 4" O.C.
(7) Smooth BUR - Field @ 6" O.C. / Perimeter @ 4" O.C
(8) Gravel Surface BUR - 4" O.C.
(9) Reduced Fastening (11 fasteners per 4 x 8 board) is acceptable on Reroof/No Tear off projects with a maximum roof height of 40'.
(10) May be fastened with ring shank nails staggered 4" on center. Versico HPV or HPVX Fasteners may also be used fastened 12" on center.
(11) Maximum 4' x 4' insulation boards when the adhesive is extruded at 12" o.c. or when boards exceed 4" thickness. 4' x 8' insulation boards may be used when the adhesive is applied at Full-Spray, Equipment (Rig) Splatter, 4", or 6" beads).

Additional Design Considerations (Up to 20 YR Warranty)

1 - Building height shall not exceed 100 feet*.
2 - Local Wind Zone per ASCE 7 shall not exceed 130 mph*.
3 - Acceptable decking: 22-gauge or heavier steel, structural concrete, 1-1/2" wood plank, or 15/32" plywood.
4 - All "T-joints" must be overlaid with appropriate flashing material.
5 - Membrane Attachment: 15 YR Warranty - Adhesive Bead Spacing 12" o.c. field, 6" o.c. perimeter up to 55 MPH; 6" o.c. field, 6" perimeter 72 MPH ; 4" o.c., Splatter, Full Spray field and perimeter 80 MPH.
6 - Membrane Attachment: 20 YR Warranty - Adhesive Bead Spacing 6" o.c. field and perimeter up to 55 MPH; 6" o.c. field, 4" o.c perimeter 72 MPH ; 4" o.c., Splatter, Full Spray field and perimeter 80 MPH.

* For projects where building height exceeds 100' or wind speed exceeds 130 mph, please submit to Versico for review.

Table III Underlayment & Fastening Density for Assemblies with Warranties - 25 YR & 30 YR

Other Requirements are Listed in Additional Design Considerations following this Table.
All Versico Products listed for higher wind speed coverage can also be used for Warranties for a lower speed coverage. (i.e. 72 MPH underlayment may be used for 55 MPH underlayment)

Peak Gust Wind Speed Warranty	Minimum Membrane Underlayment	Insulation Attachment			Metal Edging
		# of Fasteners per 4' x 8' board size (1)	Adhesive Ribbon Spacing for 4' x 4' and 4' x 8' size board (10)		
			Field	Perimeter	
55 or 72 MPH	1" to 2" (25 psi) Polyisocyanurate	16	6" (3)(5)	6" (5)	Versico Drip Edge, VersiTrim 200 or 300 (8)
	1/2" Versico Recovery Board (1)(9)				
	1/4" DensDeck Prime or 1/4" Securock				
	1/2" SecurShield HD (2)(7)				
80 MPH	1-1/2" to 2" (25-psi) SecurShield Polyiso	20	6" (3)(5)(6)	6" (5)(6)	Versico Drip Edge (4), VersiTrim 200 or 300(4)(5) or VersiTrim 2000 or 3000.
	1/2" DensDeck Prime or 1/2" Securock (2)	16			
	1/2" SecurShield HD Plus (2)				
	1/2" SecurShield HD (2)(7)	20			
90 MPH	1/2" SecurShield HD (2)(7)	24	FS	FS	VersiTrim 2000 or 3000
	1/2" SecurShield HD Plus (2)	20			
	1/2" DensDeck Prime or 1/2" Securock (2)				
100 MPH	5/8" DensDeck Prime or 5/8" DensDeck StormX Prime or 5/8" Securock (2)	16	FS	FS	VersiTrim 2000 or 3000
	1-1/2" DuraFaceR (OSB/Polyiso Composite) or 1/2" DuraStorm VSH (2)				
	2" SecurShield HD Composite (2)				
	1/2" SecurShield HD Plus (2)	24			

FS = Full Spray, Equipment (Rig) Splatter or Ribbons @ 4" O.C.
(1) For Building heights between 51'-100', enhance 12'-wide perimeter with 50% more fasteners and plates.
(2) Hail coverage offered with substrate.
(3) Structural Concrete - Field @ 12" O.C. / Perimeter @ 6" O.C.
(4) 80-mph over structural concrete - Field & Perimeter @ 6" O.C.
(5) Cementitious Wood Fiber & Wood - 4" O.C.
(6) 80-mph over Gypsum Decks - 4" O.C
(7) 1/2" SecurShield HD limited to 90 mph.
(8) May be fastened with ring shank nails staggered 4" on center. Versico HPV or HPVX Fasteners may also be used fastened 12" on center.
(9) 1/2" Recovery Board limited to 55 mph.
(10) Maximum 4' x 4' insulation boards when the adhesive is extruded at 12" o.c. or when boards exceed 4" thickness. 4' x 8' insulation boards may be used when the adhesive is applied at Full-Spray, Equipment (Rig) Splatter, 4", or 6" beads).

Additional Design Considerations (25 YR or 30 YR Warranty)

1 - Minimum membrane thickness 135-mil VersiFleece TPO (25 & 30 YR) or 135-mil VersiFleece PVC FRS (25 YR) or 135-mil VersiFleece KEE HP FRS (30 YR)

2 - Building height shall not exceed 100'*
3 - 1/4" per horizontal foot slope is preferred; however 1/8" slope with sufficient number of drains and crickets / saddles may be accepted.
4 - Local Wind Zone per ASCE 7 shall not exceed 130 mph*
5 - Acceptable decking: 22-gauge or heavier steel, structural concrete, 1-1/2" wood plank, or 15/32" plywood. Other decks should be submitted for Versico review.
6 - All "T-joints" must be overlaid with appropriate flashing material.
7 - Two layers of insulation with staggered joints, bottom layer must be a minimum 1-1/2" (20-psi) Polyisocyanurate.
8 - New construction or complete tear-off of existing roofing material.
9 - Membrane Attachment : 25/30 YR Warranty - Adhesive Bead Spacing 4" o.c., Splatter or Full Spray field and perimeter UP to 100 MPH

* For projects where building height exceeds 100' or wind speed exceeds 100 mph, please submit to Versico for review.

Table IV Flexible DASH Bead Spacing for VersiFleece Membrane and Insulation Adhesion Coverage

Peak Gust Wind Speed Warranty	Warranty Length in Years					
	5 to 15 years		20 years		25 years	
	Field	Perimeter*	Field	Perimeter*	Field	Perimeter*
55 MPH	12"	6"	6"	6"	FS	FS
72 MPH	6"	6"	6"	FS	FS	FS
80 to 120 MPH	FS	FS	FS	FS	FS	FS

FS = Full Spray, Equipment (Rig) Splatter, Dual Tank Splatter or Ribbons @ 4" o.c.
Note: Dual Tank Splatter is only approved for VersiFleece Membrane Attachment.
*Refer to Table V

Table V Minimum Perimeter Width For VersiFleece Membrane and Insulation Attachment For All Warranties Up to 30 YR

Width of Perimeter	Building Height
4 feet	25 feet
8 feet	26 to 50 feet
12 feet	51 to 75 feet
18 feet	76 to 100 feet
24 feet	Greater than 100 feet

C. A warranty covering leaks caused by hail, refer to Table I - "VersiFleece Adhered Systems Warranty Options" for size of hail. Contact Versico for specific information.

D. On projects utilizing VersiFleece 115 membrane, a 5, 10, 15, or 20-year warranty with limited coverage for accidental punctures (up to 16 man-hours per year) is available for an additional charge.

E. On projects utilizing VersiFleece 135 membrane, a 5, 10, 15, 20, 25 or 30-year (30 YR – TPO Only) warranty with limited coverage for accidental punctures (up to 32 man-hours per year) is available for an additional charge.

F. Upon review by Versico, projects incorporating white VersiFleece (TPO Only) Membrane may be eligible for a 10- year Reflectivity Warranty Amendment. These projects must be submitted to Versico prior to installation and preferably prior to bid.

G. The formation or presence of mold or fungi in a building is dependent upon a broad range of factors including, but not limited to, the presence of spores and nutrient sources, moisture, temperatures, climatic conditions, relative humidity, and heating/ventilating systems and their maintenance and operating capabilities. These factors are beyond the control of Versico and Versico shall not be responsible for any claims, repairs, restoration or damages relating to the presence of any irritants, contaminants, vapors, fumes, molds, fungi, bacteria, spores, mycotoxins, or the like in any building or in the air, land, or water serving the building.

H. **Access for Warranty Service**

It shall be the owner's responsibility to expose the membrane in the event that warranty service is required when access is impaired. Such impairment includes, but is not limited to:

1. Design features, such as window washing systems, which require the installation of traffic surface units in excess of 80 pounds per unit.

2. Any equipment, ornamentation, building service units and other top surfacing materials which are not defined as part of this specification.

3. Photovoltaic and Mounting Systems or other Rooftop equipment that does not provide Versico with reasonable access to the membrane system for purposes of warranty investigation and related repairs.

4. Severely ponding conditions.

CAUTION: Applications such as walking decks, terraces, patios or areas subjected to conditions not typically found on roofing systems are **not** covered by this specification and not eligible for system warranties as stated herein.

1.06 Job Conditions

A. On phased roofing, temporary closures should be provided to prevent moisture infiltration. When a temporary roof is specified, Versico 725TR in conjunction with CCW-702, CCW-702LV or CAV-GRIP 3V Low-VOC Adhesive/Primer may be used. Refer to Product Section Part II for additional product information and Specification Supplement G-07-20.

B. When possible on multiple level roofs, begin the installation on the highest level to avoid or minimize construction traffic on completed roof sections.

C. On projects at high altitudes (6,000' and above) rapid flash-off (drying) of Bonding Adhesive and Primers will occur due to low atmospheric pressure.

D. Polyurethane foam application shall not proceed during periods of inclement weather. Follow Versico requirements for application temperatures and humidity levels.

E. Wind barriers shall be used if conditions could affect the quality of the sprayed polyurethane foam and to prevent possible over spray.

F. Vapor Retarders

1. Versico does not require a vapor retarder for the protection of the membrane; however, it should be considered by the specifier for the protection of the roofing assembly (i.e. primarily insulation, underlayment and adhesives). The following criteria should be considered by the specifier:

a) Use of a vapor retarder to protect insulation and reduce moisture accumulation within an insulated roofing assembly, should be investigated by the specifier. Consult latest publications by ASHRAE (American Society of Heating, Refrigerating and Air-Conditioning Engineers, Inc.) and NRCA (National Roofing Contractors Association) for specific information.

b) In the generally temperate climate of the United States, during the winter months, water vapor flows upward from a heated, more humid interior toward a colder, drier exterior. Vapor retarders are more commonly required in northern climates than in southern regions, where downward vapor pressure may be expected and the roofing membrane itself becomes the vapor retarder.

c) On cold storage/freezer facilities, the perimeter and penetration details must be selected to provide an air seal and prevent outside air from infiltrating and condensing within the roofing assembly.

3. When a vapor retarder is specified, Versico 725TR Air and Vapor Barrier may be used. Refer to Part II "Products" for necessary information and **Spec Supplement G-07-20 "Application Procedures for 725TR Air and Vapor Barrier"** for product Installation.

G. Wood Nailers are required for the securement of metal edgings, scuppers, and insulated pipes. Wood Nailer shall be secured per specifier recommendation or in accordance with Factory Mutual's property Loss Prevention Data Sheet 1-49. Refer to **Design Reference DR-08-11 "Wood Nailer Securement Criteria"** in Versico Technical Manual shall be referenced.

H. Do not apply Flexible DASH Adhesive when surface and/or ambient temperatures are below 25º F, unless, heated spray equipment is being utilized. Heated spray equipment may include, blankets, preheater and/or heated hoses.

1.07 Product Delivery, Storage and Handling

A. Deliver materials to the job site in the original, unopened containers.

B. When loading materials onto the roof, the Versico Authorized Roofing Contractor must comply with the requirements of the specifier/owner to prevent overloading and possible disturbance to the building structure.

C. Job site storage temperatures in excess of 90°F (32°C) may affect shelf life of curable materials (i.e., Flexible DASH Adhesive- Parts A and B, HydroBond Adhesive, uncured flashing, cleaners, sealants, primers, quick applied products, and Pourable Sealer.)

D. Prolonged exposure of quick applied products to temperatures below 40°F (5°C) will cause the pre-applied adhesive to lose tack and in extreme cases, not bond to the membrane. Refer to Product Data Sheets for individual products for temperature restrictions.

E. Flexible DASH Adhesive must be a minimum of 70°F (21°C) at the time of use. Use drum band, blanket heaters and hot boxes when necessary.

F. VersiFleece Membrane should be stored in its original plastic wrap or be covered to protect from moisture. Moisture absorbed by the fleece-backing must be removed by using a wet-vac system and allowed to dry completely, prior to membrane adhesion.

G. PVC or KEE HP PVC Membrane that has been exposed to the elements for approximately 7 days must be prepared with PVC and KEE HP Membrane Cleaner prior to hot air welding. Refer to Section 3.06, Paragraph B.2., Exposed Membrane Seam Preparation, for requirements.

H. Do not store adhesive, primer, cleaners, etc., containers with opened lids due to the loss of solvent, which will occur from flash-off.

I. When the temperature is expected to fall below 40°F (5°C), heated storage boxes should be provided on the roof for temporary storage of liquid adhesives and sealants. Adhesive and sealant containers should be rotated to maintain their temperature above 40°F (5°C).

PART II - PRODUCTS

2.01 General

The components of this Versico Roofing System are to be products of Versico or accepted by Versico as compatible. The installation, performance or integrity of products by others, **when selected by the specifier and accepted as compatible by Versico**, is not the responsibility of Versico and is expressly disclaimed by the Versico Warranty.

2.02 Membranes

A. **VersiFleece TPO Membrane**

1. **VersiFleece TPO membrane** incorporates 45, 60 or 80-mil thick Thermoplastic Polyolefin (TPO) membrane laminated to a 55-mil non-woven fleece backing resulting in a total finished sheet thickness of 100, 115 or 135-

mils. Membrane sheets are available in rolls 12' or 6' wide by 50' or 75 ' long. VersiFleece TPO Membrane is available in white, gray or tan in the 100 and 115 thicknesses and conforms to the following:

OPTION: 115-mil VersiFleece TPO is available in 5 special colors (Medium Bronze, Rock Brown, Terra Cotta, Slate Gray and Patina Green) in 12' x 100' long rolls as a limited stock item, depending on stock levels product may require a lead time. Contact Versico for availability.

OPTION: 115-mil (white) and 135-mil (white or gray) VersiFleece TPO reinforced membrane is available with an optional APEEL Protective Film. APEEL Protective Film can be left in place for up to 90 days without affecting the integrity of the film, guarding the TPO membrane's surface from scuffs and dirt accumulation during installation. Durable and easy to remove, APEEL Protective Film improves aesthetics and long-term reflectivity. Available 6' and 12' widths by 100' long rolls for 115-mil membrane and 6' and 12' widths by 75' long rolls for 135-mil membranes. VersiWeld 135-mil VersiFleece APEEL TPO requires a minimum order of 200 squares and 2-3 week lead time. Also available, APEEL 6" Cover Tape, allowing 100% coverage of the TPO surface. APEEL Cover Tape rolls are 1,640 feet long

Property	Test Method	Property of Unaged Sheet	Property After Aging (1) 28 days @ 240° F
Thickness of reinforced sheet over fleece, in. (mm) tolerance is ±10	ASTM D 751	0.045 (1.14) – VF 100 0.060 (1.52) – VF 115 0.080 (2.03) – VF 135	
Weight, lb/sq.ft.		0.27 VF 100 0.34 VF 115 0.44 VF 135	
Breaking Strength, min, lbf (kN)	ASTM D 751 Grab Method	300 (1.3) min. VF 100 400 (1.8) min. VF 115 425 (1.9) min. VF 135	375 (1.6) min. VF 100 400 (1.8) min. VF 115 425 (1.9) min. VF 135
Elongation at break of internal fabric,%	ASTM D 751	25 typical	25 typical
Tearing Strength, min, lbf (N) 8" by 8" specimen	ASTM D 751 B Tongue Tear	55 (245) min. 130 (578) typical	55 (245) min. 130 (578) typical
Brittleness Point, °F (°C)	ASTM D 2137	-40 (-40) min. -50 (-46) typical	
Linear Dimensional Change (shrinkage), %	ASTM D 1204	+/- 1.0 max. -0.2 typical	
Ozone Resistance, 100 pphm, 168 hours	ASTM D 1149	No Cracks	No Cracks
Resistance to Water Absorption After 7 days immersion @ 158°F (70°C) Change in mass, %	ASTM D 471 (fleece removed, edges sealed)	4.0 max. 2.0 typical	
Resistance to microbial surface growth, rating (1 is very poor, 10 is no growth)	ASTM D 3274 2 yr. S. Florida	9 – 10 typical	
Field seam strength, lbf/in. (kN/m) Seam tested in peel	ASTM D1876	40 (7.0) typical VF 100 60 (10.5) typical VF 115 70 (12.3) typical VF 135	
Water vapor permeance, Perms	ASTM E 96	0.10 max. 0.05 typical	
Puncture resistance, lbf (N)	FTM 101C Method 2031	350(1.6) min. VF 100 450 (2.0) typical VF 100 400 (1.8) min. VF 115 500 (2.2) typical VF 115 425 (1.9) min. VF 135 525 (2.3) typical VF 135	350(1.6) min. VF 100 450 (2.0) typical VF 100 400 (1.8) min. VF 115 525 (2.3) typical VF 115 425 (1.9) min. VF 135 600 (2.6) typical VF 135
Puncture resistance, Joules	ASTM D5635	20 VF 100 25 VF 115 32.5 VF 135	
Resistance to xenon-arc Weathering (2) Xenon-Arc, 17,640 kJ/m^2 VF 100, 20,160 kJ/m^2 VF 115, 27,720 kJ/m^2 VF 135 total radiant exposure visual condition at 10X	ASTM G 155 0.70 W/m 80°C B.P.T.	No Cracks No loss of breaking or tearing strength	

(1) Aging conditions are 28 days at 240° F (116° C) equivalent to 400 days at 176° F (80° C) for breaking strength, elongation, tearing strength, linear dimensional change, ozone and puncture resistance.
(2) Approximately equivalent to 14,000 hours exposure at 0.35 W/m^2 irradiance. B.P.T. is black panel temperature.

B. **VersiFleece PVC Membranes**

1. **VersiFleece PVC FRS membrane** incorporates 60 or 80-mil thick, fiberglass reinforced scrim, Polyvinyl Chloride (PVC) membrane laminated to a 55-mil thick non-woven polyester fleece-backing resulting in a total finished sheet thickness of 115 or 135-mils. Membrane sheets are available in rolls 10' wide by 100' long for 115-mil membrane and 10' wide by 75' log for 135-mil membranes. VersiFleece PVC FRS Membrane is available in white, gray, light gray and tan and 135 thicknesses and conforms to the following:

Property	Test Method	Requirement	VersiFleece FRS PVC 115-mil	VersiFleece FRS PVC 135-mil
Thickness of reinforced sheet over fleece, in. (mm)	ASTM D 4434	0.016 min. (0.40)	0.025 typ. (0.635)	0.030 typ. (0.762)
Breaking Strength (MD x CD), lbf (N)	ASTM D 751	200 min. (0.022)	450 x 400 (0.05 x 0.045)	500 x 450 (0.056 x 0.045)
Elongation break of reinforcement (MD X CD), %	ASTM D 751	15 min.	70 x 100	70 x 100
Seam Strength, min. (% of breaking strength)	ASTM D 751	>75	PASS	PASS
Tearing Strength (CD), lbf (N)	ASTM D 751	45 (200)	60	60
Low Temperature Bend	ASTM D 2136	No Cracks - 5x	PASS (-40º C)	PASS (-40º C)
Linear Dimensional Change, % (MD x CD)	ASTM D 1204	± 0.5 max.	0.36 x 0.00 typ.	0.36 x 0.00 typ.
Ozone Resistance	ASTM D 1149	No Cracks – 7x	PASS	PASS
Water Absorption Resistance, mass %	ASTM D 570	± 3.0 max.	2.0 typ.	2.0 typ.
Field Seam Strength, lbf/in. (kN/m)	ASTM D1876	No Requirement	25 (4.4) min. 60 (10.5) typ.	25 (4.4) min. 60 (10.5) typ.
Water Vapor Permeance, Perms	ASTM E 96	No Requirement	0.10 max. 0.05 typ.	0.10 max. 0.05 typ.
Puncture Resistance, Dynamic, J (ft-lbf)	ASTM D 5635	20 (14.7)	PASS	PASS
Puncture Resistance, Static, lbf (N)	ASTM D 5602	33 (145)	PASS	PASS
Xenon-Arc Resistance 12,600 kJ/m^2 total radiant exposure 10,000 hrs	ASTM G 155	No Cracks or Crazing – 10x	PASS	PASS
Properties After Heat Aging, Breaking Strength, % retained	ASTM D 3045	90 min.	90 min.	90 min.
Properties After Heat Aging, Elongation Reinf., % retained	ASTM D 3045	90 min.	90 min.	90 in.

2. **VersiFleece PVC membrane** incorporates 60- or 80-mil thick, polyester reinforced scrim, Polyvinyl Chloride (PVC) membrane laminated to a 55-mil non-woven fleece backing resulting in a total finished sheet thickness of 115, or 135- mils. Membrane sheets are available in rolls 10' wide by 100' long for 115-mil membranes and 10' wide by 75' long for 135-mil membranes. VersiFleece PVC Membrane is available in white, gray, light gray, slate gray and tan and conforms to the following:

Property	Test Method	Requirement	VersiFleece PVC 115-mil	VersiFleece PVC 135-mil
Thickness of reinforced sheet over fleece, in. (mm)	ASTM D 4434	No requirement	0.060 typ. (0.152)	0.080 typ. (0.203)
Membrane Thickness over scrim, in. (mm)	ASTM D 4434	0.016 min. (0.40)	0.027 typ. (0.686)	0.037 typ. (0.940)
Breaking Strength (MD x CD), lbf (N)	ASTM D 751	200 min. (890)	420 x 380 (73 x 66)	450 x 410 (79 x 72)
Elongation break of reinforcement (MD X CD), %	ASTM D 751	15 min.	30 x 30	30 x 30
Tearing Strength (MD x CD), lbf (N)	ASTM D 751	45 (200)	197 x 165 (876 x 734)	173 x 191 (769 x 849)
Low Temperature Bend	ASTM D 2135	No Cracks - 5x	PASS (-40º C)	PASS (-40º C)
Linear Dimensional Change, %	ASTM D 1204	± 0.5 max.	0.4 typ.	0.4 typ.
Water Absorption Resistance, mass %	ASTM D 570	± 3.0 max.	2.0	2.0
Puncture Resistance, Dynamic, J (ft-lbf)	ASTM D 5635	20 (14.7)	40 (29.5)	42.5 (31.3)
Puncture Resistance, Static, lbf (N)	ASTM D 5602	33 (145)	63.99 (284.6)	63.99 (284.6)
Federal Puncture (Max. Load in lbf)	FTM-101C	No Requirement	380	460
Xenon-Arc Resistance 12,600 kJ/m^2 total radiant exposure 10,000 hrs	ASTM G 155	No Cracks or Crazing – 10x	PASS	PASS
Properties After Heat Aging, Breaking Strength, % retained	ASTM D 3045	90 min.	90 min.	90 min.
Properties After Heat Aging, Elongation Reinf., % retained	ASTM D 3045	90 min.	90 min.	90 min.

3. **VersiFleece KEE HP membrane** incorporates 50-, 60- or 80-mil thick Polyester Reinforced Elvaloy KEE HP PVC membrane laminated to a 55-mil non-woven fleece backing resulting in a total finished sheet thickness of 105-, 115, or 135- mils. Membrane sheets are available in rolls 10' wide by 100' long for 105- and 115-mil and 10' wide by 75' long for 135-mil. VersiFleece KEE HP Membrane is available in white, gray, light gray and tan and conforms to the following:

Property	Test Method	VersiFleece KEE HP PVC 105-mil	VersiFleece KEE HP PVC 115-mil	VersiFleece KEE HP PVC 135-mil
Thickness of reinforced sheet over fleece, in. (mm)	ASTM D 4434	0.050 min. (1.27)	0.060 typ. (1.52)	0.080 typ. (2.03)
Thickness over scrim, in. (mm)	ASTM D 4434	0.024 min. (0.61)	0.029 typ. (0.74)	0.036 typ. (0.91)
Breaking Strength (MD x CD), lbf (kN/m)	ASTM D 751	410 x 360 (72 x 63)	450 x 410 (79 x 72)	500 x 490 (87 x 86)
Elongation break of reinforcement (MD x CD), %	ASTM D 751	35 x 30	35 x 30	35 x 30
Tearing Strength (MD x CD), lbf (N)	ASTM D 751	120 x 150 (534 x 222)	120 x 150 (534 x 222)	120 x 150 (534 x 222)
Low Temperature Bend	ASTM D 2135	PASS (-40º C)	PASS (-40º C)	PASS (-40º C)
Linear Dimensional Change, %	ASTM D 1204	0.4 typ.	0.4 typ.	0.4 typ.
Water Absorption Resistance, mass %	ASTM D 570	1.25	0.87	0.89
Puncture Resistance, Dynamic, J (ft-lbf)	ASTM D 5635	PASS	PASS	PASS
Puncture Resistance, Static, lbf (N)	ASTM D 5602	63.99 (284.6)	63.99 (284.6)	63.99 (284.6)
Federal Puncture (Max Load in lbf)	FTM-101C	332	384	482
Xenon-Arc Resistance 12,600 kJ/m^2 total radiant exposure 10,000 hrs	ASTM G 155	PASS	PASS	PASS
Properties After Heat Aging, Breaking Strength, % retained	ASTM D 3045	90 min.	90 min.	90 min.
Properties After Heat Aging, Elongation Reinf., % retained	ASTM D 3045	90 min.	90 min.	90 min.

2.03 Insulation / Underlayments

A. **General**

1. Roof insulation thickness must be determined by the thermal value required for each project and may be subject to code approval limitations. On projects where a vapor retarder is used, the specifier must calculate insulation thickness to ensure the temperature at the vapor retarder will not fall below the calculated dew point.

2. Multiple layers of insulation are recommended with all joints staggered between layers.

3. For minimum recommended R-Values, previously published by American Society of Heating and Air-Conditioning Engineers (ASHRAE), consult local building code official for applicable requirements.

4. For Insulation fastening pattern and densities refer to Versico Applicable Details and **Design Reference DR-05-23 "Insulation Fastening Patterns"**.

5. Versico Insulation/underlayment must be specified for all Total System Warranty projects or when the insulation is to be covered by the Versico Warranty. Any of the Versico Insulation/Underlayment may be specified subject to design restrictions included with each table.

B. **Versico Polyisocyanurate**

Table B1	**Polyisocyanurate** (See below for product descriptions)			
Insulations	**Minimum Thickness**	**ASTM**	**Roofing System Acceptability**	
			Fully Adhered	**Mechanically Attached**
Versico VersiCore Polyiso	*1.5"	C1289-06, Type II, Class 1, Grade 2 or 3	√	√
Versico VersiCore Polyiso NH	*1.5"	C1289-06, Type II, Class 1, Grade 2 or 3	√	√
Versico SecurShield Polyisocyanurate	*1.5"	C1289-06, Type II Class 2, Grade 2 or 3	√	√
Versico SecurShield Polyisocyanurate NH	*1.5"	C1289-06, Type II Class 2, Grade 2 or 3	√	√
Versico SecurShield HD Composite (SS HD)	2"	C1289-06, Type IV, Grade 2 or 3	√	√
Versico DuraFaceR Polyiso Composite (OSB)	1.5"	C1289-06, Type V, Grade 2 or 3	√	√

Design Restrictions

- Extended Warranty, those with longer duration, higher wind speed, or puncture coverage, may require the use of a cover board over Polyiso Insulation, refer to Warranty Tables in Paragraph 1.04 for applicable requirements.
- Maximum Flute Spanability shall be limited to 2-5/8" when 1" Minimum Polyiso Insulation is to be used.
- Minimum thickness of insulation board may be restricted by wind speed coverage and warranty duration, refer to Tables II and III in Paragraph 1.05.

*1.5" minimum for fully adhered systems. Subject to Warranty Limitation. 1" minimum may be accepted for fully adhered system, Versico must be contacted for fastening density.

Notes: N/A = Not Acceptable √ = Acceptable

2. **Versico VersiCore Polyiso** – A foam core insulation board covered on both sides with a medium weight fiber-reinforced felt facer meeting ASTM C 1289-06, Type II, Class 1, Grade 2 (20 psi) or Grade 3 (25 psi). The product is available in 4' x 8' standard size with a thickness from 1 to 4 inches. 4' x 4' tapered panels are also available.

3. **Versico VersiCore Polyiso NH -** A foam core insulation board covered on both sides with a glass-reinforced felt meeting ASTM C 1289, Type II, Class 1, Grade 2 (20 psi) or Grade 3 (25 psi). The product is available in 4' x 4' and 4' x 8' standard size with a thickness from ½" to 4 inches. VersiCore Polyiso NH contains zero halogenated flame retardants.

4. **SecurShield Polyisocyanurate –** A foam core insulation board covered on both sides with a coasted glass fiber mat facer meeting ASTM C 1289-06, Type II, Class 2, Grade 2 (20 psi) or Grade 3 (25 psi). The product is available in 4' x 8' standard size with a thickness from 1 to 4 inches. 4' x 4' tapered panels are also available. These flat board products feature a dark-colored coated-glass facer (CGF) on one side of the insulation board and a light-colored CGF on the other, labeled Ready Flash. Ready Flash Technology allows applicators to manage adhesive flash-off times by choosing between two different-colored facers on every board.

5. **SecurShield Polyisocyanurate –** A foam core insulation board covered on both sides with a coated glass fiber mat facer meeting ASTM C 1289, Type II, Class 2, Grade 2 (20 psi) or Grade 3 (25 psi). The product is available in 4' x 4' and 4' x 8' standard size with a thickness from ½ inch to 4 inches. SecurShield NH contains zero halogenated flame retardants.

6. **SecurShield HD Composite** – Composite insulation panel comprised of 1/2-inch high-density (109 psi max) Polyiso cover board laminated during the manufacturing process to SecurShield rigid Polyiso roof insulation meeting ASTM C1289 Type IV, Grade 2 (20 psi) or Grade 3 (25 psi). Available in 4' x 8' boards with thickness from 2" to 4.5". 4' x 4' panels are also available.

7. **DuraFaceR Polyiso Composite (OSB)** – Polyiso insulation bonded on the bottom side with a medium weight fiber-reinforced felt face and laminated with a top surface of 7/16" or 5/8" thick Oriented Strand Board (OSB) meeting ASTM C1289, Type V, Grade 2 (20 psi) or Grade 3 (25 psi). Available in 4' x 8' boards with thickness from 1-1/2" to 4".

C. **EPS : Expanded Polystyrene**

Table C1	**EPS : Expanded Polystyrene** (See below for product descriptions)			
Insulations*	**Minimum Thickness**	**ASTM**	**Roofing System Acceptability**	
			Fully Adhered	**Mechanically Attached**
InsulFoam I (1 lb density)	1”	C578 Type I	N/A	N/A
InsulFoam VIII	.75”	C578 Type VIII	N/A	N/A
InsulFoam II	.75"	C578 Type II	N/A	N/A
InsulFoam HD Composite (SecurShield HD)	1.5”	C578 Type (I, VIII, II, or IX)	√	√
InsulLam (Various Cover Boards)	1.5"	C578 Type (I, VIII, II. or IX)	√	N/A
InsulFoam SP	1"	C578 Type VIII	N/A	VersiWeld
Design Restrictions				
- Local Codes must be consulted regarding the acceptance of expanded insulation directly over steel decks. When specified, minimum thickness shall be designated by the manufacturer. - Expanded polystyrene roof insulations cannot be installed directly over coal-tar pitch roof surfaces or existing PVC membranes. A separation layer of minimum 1/2” SecurShield HD, Versico Recovery Board or Polyiso Insulation shall be used. - Other Insulations in other densities are available- Contact Versico				
Notes: N/A = Not Acceptable √ = Acceptable * R-Tech Fanfold Recover Board is listed in Paragraph E4 below				

a) **Insulfoam I –** A closed-cell lightweight expanded polystyrene (EPS) that meets ASTM C578, Type I. Nominal density of 1.0 lbs/cubic ft (pcf) available in 4’ x 4’ or 4’ x 8’ sizes with thickness from 1/4" to 40”. Custom lengths, widths and tapered boards are available. May be specified beneath Versico Recovery Board, Dens-Deck Prime, DensDeck StormX Prime or Securock.

b) **Insulfoam VIII –** A closed-cell lightweight expanded polystyrene (EPS) that meets ASTM C578, Type VIII. Nominal density of 1.25 lbs/cubic ft (pcf) available in 4’ x 4’ or 4’ x 8’ sizes with thickness from 1/4" to 40”. Custom lengths, widths and tapered boards are available. May be specified beneath Versico Recovery Board, Dens-Deck Prime, DensDeck StormX Prime or Securock.

c) **Insulfoam II –** A closed-cell lightweight expanded polystyrene (EPS) that meets ASTM C578, Type II. Nominal density of 1.5 lbs/cubic ft (pcf) available in 4’ x 4’ or 4’ x 8’ sizes with thickness from1/4” to 40”. Custom lengths, widths and tapered boards are available. May be specified beneath Versico Recovery Board, Dens-Deck Prime, DensDeck StormX Prime or Securock.

d) **InsulLam HD Composite – A composite insulation consisting of a closed-cell, lightweight and resilient expanded polystyrene (EPS) bonded to high-density Polyisocyanurate cover board. Available in 4’ x 8’ boards with overall thickness from 1-1/2” to 7”.**

e) **InsulLam –** Insulfoam expanded polystyrene (EPS) insulation laminated with a top surface of 7/16” or 5/8” thick Oriented Standard Board (OSB) or 5/8” plywood. Available in 4’ x 8’ boards with thickness from 1-1/2” to 7”.

f) **Insulfoam SP** - A closed-cell, lightweight and resilient expanded polystyrene (EPS) with a durable and stable, factory-laminated fiber glass facer. Available in 4’ x 8’ boards with overall thickness from 1” to 7”.

D. **XPS: Extruded Polystyrene –** Available through Versico is dimensionally stable with high thermal and low water absorption performance capability. XPS is available in varying compressive strengths thicknesses and sizes and can be specified as a base layer beneath an acceptable cover board. Refer to specific product data sheets for physical properties and additional technical information.

E. **Versico Vacuum Insulated Panel (VIP)**

Table E1	**Vacuum Insulated Panel (VIP)** (See below for product descriptions)			
Insulations / Underlayment	**Minimum Thickness**	**ASTM**	**Roofing System Acceptability**	
			Adhered	**Mechanically Fastened**
Versico Optim-R VIP	*1.6"	C1484	√	N/A
Design Restrictions				
*2.6" minimum for total installed system including an additional 2 layers of 1/2" SecurShield HD panels; 1 layer on top and 1 layer on bottom of Optim-R. For adhered systems only. Note: Optim-R VIP cannot be cut or punctured.				
Notes: N/A = Not Acceptable √ = Acceptable				

1. **Optim-R Vacuum Insulated Panel (VIP) –** a high R-Value vacuum insulated panel (VIP) used to provide a low-profile solution when height restrictions exist, such as windows, doors, equipment curbs, etc. Provides an R-38 insulating value in a 2.6" system thickness with up to 35% infill (non-VIP material). Available in 23.6" x 23.6" and 23.6" x 47.2" board sizes.

F. **Cover Boards**

Table F1	**Cover Boards** (See below for product descriptions)			
Insulations / Underlayment	**Minimum Thickness**	**ASTM**	**Roofing System Acceptability**	
			Fully Adhered	**Mechanically Attached**
SecurShield HD	.5"	C1289, Type II, Class 4 (109 psi max)	√	√
SecurShield HD Plus	.5"	C1289, Type II, Class 4 (109 psi max)	√	√
VersiCore HD	.5"	C1289, Type II, Class 1, Grade 3	N/A	√
DuraStorm VSH	.5"	Refer to Technical Data Bulletin	√	√
Securock Cover Board	.25"	Refer to Technical Data Bulletin	√	√
Versico Recovery Board	.5"	C208 Grade 2	√	√
DensDeck StormX Prime	.625"	C1177	√	√ (1)
DensDeck Prime	.25"	C1177	√	√ (1)
DensDeck	.25"	C1177	√	√ (1)
R-Tech Fanfold Recovery Board	.5"	C578 Type (I, VIII, II. or IX)	N/A	√
Design Restrictions				
- Versico Recovery Board and R-Tech Fanfold not recommended for direct use over Type B and F steel decks. - Securock Cover Board, Versico Recovery Board, DensDeck Prime, DensDeck StormX Prime or DensDeck may not be used directly over New or Existing Lightweight Insulating Concrete Decks existing or Structural Concrete. - Due to some warranty restrictions, DensDeck, DensDeck StormX Prime and DensDeck Prime not recommended for use directly over existing roofing membrane without prior written approval from Versico. Contact Versico for specific requirements. - R-Tech Fanfold primarily for use in existing roof re-covers applications or directly over structural or lightweight insulating concrete. (1) Permitted with roofs with slopes greater than 2" per foot for compliance with external fire codes, refer to UL listings or contact Versico.				
Notes: N/A = Not Acceptable √ = Acceptable				

2. **SecurShield HD –** a rigid insulation panel composed of a high-density (109 psi max), closed-cell polyisocyanurate foam core laminated to coated-glass fiber-mat facer for use as a cover board or recover board. Available 1/2" thick 4' x 8' panel weight 11 lbs with an R-value of 2.5. These flat board products feature a dark-colored coated-glass facer (CGF) on one side of the insulation board and a light-colored CGF on the other, labeled Ready Flash. Ready Flash Technology allows applicators to manage adhesive flash-off times by choosing between two different-colored facers on every board.

3. **SecurShield HD Plus** - a rigid insulation panel composed of a high-density (109 psi max), closed-cell polyisocyanurate foam core laminated to premium-performance coated-glass fiber-mat facer for use as a cover board or recover board. Available 1/2" thick 4' x 8' panel weight 11 lbs with an R-value of 2.5. Meets an FM 1-90 using only 8 fasteners per 4' x 8' board.

4. **VersiCore HD –** a closed-cell polyisocyanurate foam core insulation board covered on both sides with glass-reinforced felt (GRF) facer meeting ASTM C 1289, Type II, Class 1, Grade 3. The product is available in 4' x 4' and 4' x 8' standard sizes with a thickness of one half inch.

5. **Securock Cover Board –** A uniform composition of fiber-reinforced gypsum, without a facer, for use as a cover board or a thermal barrier. Available in 1/4" to 5/8" thick and 4' x 4' or 4' x 8' size boards. Long uninterrupted runs (>200') may require slight gapping due to thermal expansion.

6. **DuraStorm VSH Cover Board -** an engineered composite building material made from a proprietary blend of plastic and cellulose fiber sourced from post-industrial and post-consumer waste streams. DuraStorm VSH is a durable, extremely moisture and mold resistant building material with a core that does not disintegrate or delaminate in the presence of water. Available in 1/2" thick and 4' x 8' size board.

7. **Versico Recovery Board** - A 1/2" or 1" thick high-density wood fiberboard with an asphalt coated facer for use as a cover board or recover board. Available1/2" or 1" thick and 4' x 4' or 4' x 8' size boards. When used in reroof / no tear-off projects, warranty is limited to 15-year projects.

8. **DensDeck StormX Prime** – a reinforced gypsum cover board with an enhanced, moisture-resistant core and coated glass mat facers on the top and bottom side. The top surface is pre-primed and provides excellent bond strength for adhered membrane for use as a cover board. DensDeck StormX Prime is extremely durable and is approved for use in assemblies meeting FM's Very Severe Hail (VSH) Classification. Available in 5/8" thickness and 4' x 4' or 4' x 8' size boards.

9. **DensDeck Prime** –gypsum core that incorporates glass-mat facings on the top and bottom side. The top surface is pre-primed and provides excellent bond strength for fully adhered membrane for use as a cover board. Available in 1/4" to 5/8" and 4' x 4' or 4' x 8' size boards.

10. **DensDeck Cover Board** –gypsum core that incorporates glass-mat facings on the top and bottom side for use as a cover board. Available in 1/4" to 5/8" and 4' x 4' or 4' x 8' size boards.

G. For projects specified in conjunction with new sprayed-in-place polyurethane foam insulation, VersiFleece membrane can be adhered directly to the new urethane foam surface with Versico Flexible DASH Adhesive. Refer to Versico's SPF Fully Adhered Roofing System Specification for specific requirements.

2.04 Related Materials

A. **Flashings**

1. **TPO (VersiWeld) Related Products**

a. **VersiWeld Flashing**: VersiWeld 60-mil **non-reinforced flashing** is available in rolls **12" and 24" wide by 50' long**. Flashing is used for inside/outside corners, field fabricated pipe flashings, sealant pockets and scuppers, when the use of pre-molded accessories is not feasible. In addition, 45-mil by 6" wide by 100' long, 60-mil by 9" wide by 50' long and 0.080 by 9" wide by 50' long VersiWeld reinforced membrane is available for overlaying fasteners and fastening plates.

b. **VersiWeld Pressure-Sensitive Cover Strip:** A nominal 40-mil thick non-reinforced TPO membrane laminated to nominal 35-mil thick cured synthetic rubber quick-applied adhesive used in conjunction with TPO Primer or Low-VOC TPO Primer to strip in flat metal flanges (i.e., drip edges or rows of fasteners and plates). Available in rolls 6" wide by 100' long in colors of white, gray or tan. Not for use on 25-year or 30-year Warranty projects.

c. **VersiWeld TPO Reinforced Overlayment Strip:** A heat-weldable, reinforced thermoplastic polyolefin membrane. It is available in 45-mil 6" x 100' and 60-mil 6" x 100' and 9" x 50' rolls in colors of white, gray or tan. It can be used to cover end laps on VersiFleece and QA TPO systems and to strip in flat metal flanges on details such as TPO coated drip edges, gravel stops, and scuppers.

d. **VersiWeld TPO APEEL Cover Tape:** A 6"-wide, 1,640' long roll of APEEL Protective Film used to protect areas of VersiWeld TPO membrane where APEEL Protective Film has been removed (around details) or was

not factory applied (seams). APEEL Cover Tape allows contractors to keep 100 percent of the TPO surface clean during installation and is applied using the APEEL Cover Tape Applicator.

e. **VersiWeld TPO T-Joint Covers:** A 60-mil thick injection molded TPO flashing formed into a 4.5" diameter circle used to seal step-offs at splice intersections. Installation is mandatory on all 60-, 72-, and 80-mil TPO systems and on 45-mil systems where step-offs have not been properly sealed. Packaged in boxes of 100. Available in white, tan or gray.

f. **Yellow Pressure-Sensitive (PS) Warning Strip:** A nominal 30-mil-thick non-reinforced TPO flashing laminated to a nominal 30-mil-thick, fully cured synthetic rubber Pressure-Sensitive adhesive and is available in 6" wide by 100' long rolls. Yellow Pressure-Sensitive Warning Strip can be applied to EPDM, TPO or Hypalon roofing systems to provide a visual warning of an impending hazard (i.e. roof edge, deep drain sump, skylight).

g. **VersiWeld TPO Rib Profile:** Used to obtain the appearance of standing seam metal roofing with the performance of a TPO single-ply membrane. The Rib Profile measures 1-1/4" tall and 2-1/8" wide, including the welding flanges, while the vertical profile is a substantial 3/8" thick. The profile has a continuous 1/8" diameter alignment hole, for use with fiberglass connecting pins, as well as a 1/8" fiberglass reinforcing cord for added strength. The Rib Profile is available in white, gray and tan, 10' lengths and packaged 20 per carton.

h. **Pre-molded Accessories**:

1) **Inside Corners:** A pre-molded corner flashing for inside corners. Available in white, gray or tan; 60-mil thick.

2) **Outside Corners:** A pre-molded corner flashing for outside corners. Available in white, gray or tan; 60-mil thick.

3) **TPO Curb Wrap Corners**: Fabricated flashings are made of 45-mil thick reinforced VersiWeld membrane designed to reduce installation time to flash a curb when compared to conventional methods. Each corner is fabricated with a 6" wide base flange and a 12" overall height. Six sizes are available to fit curbs up to 6' by 6' in size. One curb requires 4 corners for a complete installation. TPO Curb Corners are packaged in boxes of twelve. Custom sizes are available as a special order product requiring lead time.

4) **TPO Universal Corners:** a pre-molded flashing for use in a variety of corner details, including inside and outside corners. Available in white and are 60-mil thick.

5) **Pipe Flashings:** A pre-molded white, gray or tan pipe flashing used for pipe penetrations. Available for 1" – 6" diameter pipes with clamping rings included.

6) **Split Pipe Seals:** A prefabricated flashing consisting of 45-mil thick reinforced VersiWeld Membrane for pipes 1" – 6" in diameter. A split (cut) and overlapped tab are incorporated to allow the pipe seal to be opened and wrapped around the pipe when it is not possible to pull a standard pipe flashing over a round penetration. Custom sizes are available as a special order product requiring lead time.

7) **TPO Square Tubing Wraps**: Fabricated flashings made of 45-mil thick reinforced VersiWeld membrane for square tubing. A split (cut) and overlap tab are incorporated into these parts to allow the seals to be opened and wrapped around a square penetration. Available for 3", 4", 5" and 6" diameter square tubing.

8) **Molded TPO Sealant Pockets:** A pre-fabricated, interlocking, 2-piece, injection molded, flexible pocket with a rigid polypropylene vertical wall and pre-formed deck flanges. Pockets can be adjusted from 11.5" to 7.5" in length by 6" in width by following the cutting lines molded into the pocket. Used in conjunction with Thermoplastic One-Part Pourable Sealer for waterproofing pipe clusters or other odd shaped penetrations. Available in white, gray or tan.

9) **Pre-Fabricated Sealant Pockets:** A two-piece, pre-fabricated sealant pocket that utilizes reinforced TPO membrane and coated metal to form a rigid, oversized sealant pocket with a weldable horizontal deck flange. Available in 12" (total volume of 1.87 gallons), 16" (total volume of 2.77 gallons) and 20" (total volume of 3.81 gallons). Packaged 2 per carton and available in white only. Refer to the applicable Technical Data Bulletin for dimensions and installation instructions.

10) **Sealant Pocket Extension Legs:** Designed for use with the TPO Molded Sealant Pocket and the Pre-Fabricated Sealant Pocket to extend the length in increments of 10". Fabricated from 45-mil thick reinforced TPO membrane and TPO coated metal. Can be used full length, cut to size for customized lengths or welded to each other for extra-long applications. Packaged 10 legs per carton and available in white only.

2. **PVC and KEE HP (VersiFleece) Related Products**

a. **VersiFlex PVC Flashing** is 60-mil thick, non-reinforced, (white, gray, light gray, slate gray or tan) and available in rolls **12" and 24" wide by 50' long**. Flashing is used for inside/outside corners and field fabricated pipe flashings when use of pre-molded accessories is not feasible.

b. **VersiFlex PVC Reinforced Cover Strip:** A 8” wide, nominal 60-mil and 80-mil thick, polyester reinforced PVC membrane. Used for stripping in rows of fasteners and plates and covering the butt joints of VersiFlex PVC membranes. Available in rolls 8" wide by 75' long in colors of white, gray or tan.

c. **VersiFlex KEE HP Reinforced Cover Strip:** A 8” wide, nominal 60-mil and 80-mil thick, polyester reinforced KEE HP PVC membrane. Used for stripping in rows of fasteners and plates and covering the butt joints of VersiFlex KEE HP PVC membranes. Available in rolls 8" wide by 75' long in colors of white, gray or tan, also available in 60-mil in rolls of 8” wide by 100’ long in white only.

d. **VersiFlex PVC Pressure-Sensitive Cover Strip:** A 6” wide, nominal 35-mil thick non-reinforced KEE HP flashing laminated to a nominal 35-mil, fully cured, pressure-sensitive, synthetic rubber adhesive. Used for stripping in flat metal edgins (i.e. drip edge) of VersiFlex PVC and KEE HP PVC membranes. Available in rolls 6" wide by 100' long in colors of white, gray or tan. Used in conjunction with PVC Step 1 Activator and PVC Step 2 Primer.

e. **VersiFlex PVC “T” Joint Cover:** A 4-1/2" diameter, 60-mil thick (white) or 40-mil (gray or tan), injection molded PVC flashing used to overlay “T” joints at field splices when 80-mil VersiFlex PVC or KEE HP membrane is used.

f. **VersiFlex PVC Yellow Pressure-Sensitive Warning Strip:** a nominal 30-mil-thick, non-reinforced membrane flashing laminated to a nominal 30-mil-thick, fully cured, synthetic rubber, pressure-sensitive adhesive and is available in 6"-wide by 100'-long rolls. Pressure-Sensitive Warning Strip can be applied to VersiFlex PVC or KEE HP systems to provide a visual warning of an impending hazard (e.g., roof edge, deep drain sump, skylight, etc.).

g. **VersiFlex PVC Rib Profile:** Used to obtain the appearance of standing seam metal roofing with the performance of a PVC single-ply membrane. The Rib Profile measures 1-1/4” tall and 2-1/8” wide, including the welding flanges, while the vertical profile is a substantial 3/8” thick. The profile has a continuous 1/8” diameter alignment hole, for use with fiberglass connecting pins, as well as a 1/8” fiberglass reinforcing cord for added strength. The Rib Profile is available in white, gray, light gray, slate gray and tan, 10’ lengths and packaged 20 per carton.

h. **Pre-Molded Accessories:**

1) **VersiFlex PVC Inside Corners:** A pre-molded flashing for inside corners. Available in white or gray on tan; 60-mil thick.

2) **VersiFlex PVC Outside Corners:** A pre-molded flashing for outside corners. Available in white, gray or tan; 60-mil thick.

3) **VersiFlex PVC Curb Wrap Corners**: Fabricated flashings are made of 60-mil thick reinforced VersiFlex KEE HP PVC Detail membrane designed to reduce installation time to flash a curb when compared to conventional methods. Each corner is fabricated with a 6" wide base flange and a 12" overall height. Three sizes are available to fit curbs up to 3' by 3' in size. One curb requires 4 corners for a complete installation. PVC Curb Wrap Corners are packaged in boxes containing twelve corners. Custom sizes are available as a special order product requiring lead time.

4) **VersiFlex PVC Universal Corners:** a pre-molded flashing for use in a variety of corner details, including inside and outside corners. Available in white, tan, gray, and light gray; 60-mil thick.

5) **VersiFlex PVC Pipe Flashings:** A pre-molded pipe flashing used for pipe penetrations. Available in white, gray, light gray and tan for 3/4" – 8" diameter pipes with clamping rings included.

6) **VersiFlex PVC Split Pipe Seals:** A prefabricated flashing consisting of 60-mil thick reinforced VersiFlex Membrane for pipes 1" – 6" in diameter. A split (cut) and overlapped tab are incorporated to allow the pipe seal to be opened and wrapped around the pipe when it is not possible to pull a standard pipe flashing over a round penetration. Available in white, gray or tan.

7) **VersiFlex PVC Square Tubing Wraps:** Fabricated flashings made of 60-mil thick reinforced VersiFlex membrane for square tubing. A split (cut) and overlap tab are incorporated into these parts to allow the seals to be opened and wrapped around a square penetration. Available for 3", 4" and 6" diameter square tubing. Available in white or gray.

8) **VersiFlex PVC Molded Sealant Pocket:** A pre-fabricated, interlocking, 2-piece, injection molded, flexible pocket with a rigid PVC vertical wall and pre-formed deck flanges. Pockets can be adjusted from 11.75" to 7.5" in length by 6" in width by following the cutting lines molded into the pocket. Used in conjunction with White One-Part Pourable Sealer for waterproofing pipe clusters or other odd shaped penetrations. Available in white only.

B. **Primers, Adhesives, Sealants and Cleaners**

Refer to Technical Data Bulletins for material coverage rates and proper usage. Prior to the use of any of the products listed below, consult the Safety Data Sheets (SDS) for applicable cautions and warnings.

1. **General Adhesives and Sealants (For all Membranes)**

a) **Flexible DASH Adhesive:** A two-component (Part A and B), low-rise polyurethane adhesive designed for bonding VersiFleece membrane and/or insulation to various substrates. Coverage rates can be found in Paragraph 3.05 'Membrane Placement and Securement'. Flexible DASH Adhesive is packaged in 50- and 15-gallon drums, as well as, 5-gallon Jug and Dual Cartridges that can be applied in full spray, extrusion, or splatter application depending on dispensing type.

b) **Flexible DASH Dual Tank Adhesive:** A two component (Part A and B), low rise adhesive for bonding VersiFleece membrane and/or insulation to various surfaces. Flexible DASH Dual Tanks utilize an HFO blowing agent. HFO (hydrofluoroolefin) blowing agents are widely recognized as the next-generation environmentally friendly blowing agent, replacing their HFC (hydrofluorocarbon) predecessor. Flexible DASH Dual Tank Adhesive can be applied in bead or spatter application. Coverage rates can be found in Paragraph 3.05 'Membrane Placement and Securement'.

c) **Flexible DASH Dual Cartridge:** A two component (Part A and B), extrusion applied, low rise adhesive for bonding insulation to various surfaces. Flexible DASH Dual Cartridge Adhesive can be applied in bead application. Coverage rates can be found in Paragraph 3.05 'Membrane Placement and Securement'.

d) **Aqua Base 120 Bonding Adhesive**: A semi-pressure-sensitive, water based adhesive used as a one-sided wet lay-in adhesive for VersiFleece (VersiWeld). Coverage rate is 100-120 square feet per gallon finished surface. **Refer to Spec Supplement G-09-21 "Aqua Base 120 Bonding Adhesive"** for further information.

e) **HydroBond Water-Based Adhesive:** A wet lay-in, one-sided dispersion adhesive. Compatible with all VersiFleece membranes, this product is ideal for bonding to various porous and non-porous substrates. (The use of Hydrobond with VersiFleece EPDM is not approved for use with Coated Glass Faced products). Coverage rates vary between 100-133 square foot per gallon using roller or spray applications.

f) **CAV-GRIP 3V Low-VOC Aerosol Contact Adhesive/Primer:** a Low-VOC, spray-applied aerosol contact adhesive and primer used for a variety of applications: adhering standard VersiWeld TPO and VersiGard EPDM membranes to horizontal and vertical surfaces, adhering VersiFleece membrane to vertical surfaces, as a primer for VapAir Seal 725TR, and as an unexposed asphalt primer for Flexible DASH for insulation attachment.

g) **Water Cut-Off Mastic:** A one-component, low viscosity, self-wetting, Butyl blend mastic used to prevent moisture migration at drains, compression terminations and beneath certain metal edging (at a coverage rate of approximately 10' per tube or 100' per gallon.

h) **Universal Single-Ply Sealant:** A 100% solids, solvent free, one-part, polyether sealant that provides a weather tight seal to a variety of building substrates. Can be used as a termination bar sealant or for use in counterflashing, coping, and scupper details. Packaged 24 per carton in 10.3 ounce tubs with a coverage rate of approximately 10' per tube.

2. **VersiWeld Adhesives, Sealants and Cleaners**

a) **VersiWeld Bonding Adhesive:** A high-strength, synthetic rubber adhesive used for bonding VersiWeld non-fleece-backed membrane to various surfaces. The adhesive is applied to both the membrane and the substrate at a coverage rate of approximately 60 square feet per gallon per finished surface (includes coverage on both surfaces).

b) **VersiWeld Low-VOC Bonding Adhesive:** An alternate, high-strength, adhesive using a blend of VOC exempt and non-exempt solvent which complies with the State of California Clean Air Act of 1988 (updated in 1997).

c) **TPO Cut-Edge Sealant:** A clear sealant used to seal cut edges of reinforced VersiWeld membrane. A coverage rate of approximately 225 - 275 linear feet per squeeze bottle can be achieved when a 1/8"diameter bead is applied.

d) **White One-Part Pourable Sealer:** A one-part, moisture curing, elastomeric polyether sealant used to fill TPO Molded Pourable Sealer Pockets. Packaged in 4, 2-liter foil pouches inside a reusable plastic bucket. 1 pouch will fill 2 TPO Molded Pourable Sealer Pockets.

e) **Weathered Membrane Cleaner:** Used to prepare membrane that has been exposed to the elements for approximately 7 days prior to hot air welding at an approximate coverage rate of 600 linear feet per gallon on a 4" wide surface.

f) **TPO and Low-VOC TPO Primer:** A primer used to prepare the surface of the membrane for the application of the Quick Applied Cover Strip.

3. **VersiFlex Adhesives, Sealants and Cleaners**

a) **Low-VOC Bonding Adhesive:** A high-strength, synthetic rubber adhesive used for bonding VersiFlex membrane to various surfaces. The adhesive is applied to both the membrane and the substrate at a coverage rate of approximately 60 square feet per gallon per finished surface (includes coverage on both surfaces).

b) **Hydrobond Water-Based Adhesive:** A wet lay-in, one-sided dispersion adhesive. Compatible with only VersiFlex PVC smooth-backed and VersiFleece membranes, this product is ideal for bonding only PVC membranes to various porous and non-porous substrates (cannot be used with any KEE or KEE HP PVC bareback membranes). Coverage rates vary between 100-133 square foot per gallon using roller or spray applications.

c) **CAV-GRIP PVC Aerosol Contact Adhesive:** a low-VOC, methylene chloride-free adhesive that can be used for a variety of applications including: adhering PVC bareback membranes to a variety of horizontal substrates and vertical walls (cannot be used with any KEE or KEE HP bareback membranes), as well as adhering VersiFleece membranes to vertical walls. Coverage rate is approximately 400 sq. ft. per #40 cylinder and 800 sq. ft. per #85 cylinder as an adhesive for vertical walls, in a double-sided application; 750 sq. ft. per #40 cylinder and 1,500 sq. ft. per #85 cylinder as an adhesive, horizontally, for the field of the roof, in a double-sided applications.

d) **VersiFlex Cut-Edge Sealant:** A clear sealant used to seal cut edges of reinforced VersiFlex membrane. A coverage rate of approximately 225 - 275 linear feet per squeeze bottle can be achieved when a 1/8"diameter bead is applied. The use of cut edge sealant to seal cut edges of VersiFlex membrane is not required.

e) **White One-Part Pourable Sealer:** A one-part, moisture curing, elastomeric polyether sealant used to fill Molded Sealant Pockets. Packaged in four 1/2 gallon pouches per plastic bucket. One pouch will fill 122 cubic inches of volume within a molded sealant pocket.

f) **PVC and KEE HP Membrane Cleaner:** Used to prepare PVC and KEE HP PVC membrane that has been exposed to the elements for approximately 7 days prior to hot air welding or to remove general construction dirt. Approximate coverage rate of 400 square feet per gallon (one surface).

g) **VersiFlex Low-VOC PVC Step 1 Activator:** A high-strength, solvent-based activator that allows PVC

Pressure-Sensitive (PS) Cover Strip to be bonded to VersiFlex PVC or KEE HP membranes. Low-VOC PVC Step 1 Activator meets the < 250 gpl VOC content requirements of the OTC Model Rule. It is specially formulated using a blend of VOC-exempt and non-exempt solvents and follows the state of California Clean Air Act of 1988 (updated in 1997) as further regulated by California's Air Quality Control Districts listing VOC limitations.

h) **VersiFlex Low-VOC PVC Step 2 Primer:** A high-solids-content, polymer based splice primer. This product is applied to KEE HP and PVC membranes to improve the adhesion of PVC Pressure-Sensitive Cover Strip. Low-VOC PVC Step 2 Primer meets the < 250 gpl VOC content requirements of the OTC Model Rule.

i) **VersiFlex PVC Step 2 Primer:** A high-solids-content, clear (translucent color), polymer-based splice primer used to prepare KEE HP and PVC membranes to be bonded to PVC Pressure-Sensitive Cover Strip.

2.05 Fastening Components

A. **Fasteners**

The following Table illustrates criteria for fastening of Versico Insulation with the referenced roof deck and includes minimum penetration requirements and pilot hole criteria.

Insulation Fastening Criteria

Deck Type	Versico Fasteners (1)	Min. Penetration	Pilot Hole Depth	Pilot Hole Diameter
Steel or Lightweight Insulating Concrete over Steel	ASAP or InsulTite	3/4"	N/A	N/A
Structural Concrete, rated 3,000 psi or greater	CD-10	1"	Note (2)	7/32"
	MP 14-10	1"	Note (2)	3/16"
Wood Plank, min. 15/32" thick Plywood or min. 7/16" OSB	HPV, ASAP or InsulTite	Min. 1" (3)	N/A	N/A
Cementitious Wood Fiber	Polymer Gyptec	1-1/2"	Note (4)	N/A
Cementitious Wood Fiber	Lite-Deck Fastener	2"	Note (4)	N/A
Gypsum	Polymer Gyptec	1-1/2"	Note (2)	7/16", 1/2" or 9/16" (5)
Gypsum	Lite-Deck Fastener	2"	Note (5)	Note (6)

Notes: N/A = Not Applicable

(1) Only 3" diameter insulation fastening plates can be used for insulation attachment.
(2) The pilot hole must be predrilled to a sufficient depth to prevent contact between the fastener point and any accumulated dust in the predrilled hole. This will help prevent bottoming out of the fastener during installation.

(3) For wood planks only, fastener penetration shall not exceed 1-1/2".
(4) Most cementious wood fiber decks do not require pre-drilling; however, Versico should be contacted prior to installation for verification of specific types that may require a pilot hole to be predrilled.

(5) Pilot hole size may be varied to maximize pullout resistance.
(6) Gypsum hardness varies, and the desired pullout may determine pilot hole size. This could range from ¼" to 5/16.

All Fasteners listed below can be used with VersiWeld or VersiFlex Roofing Systems. Refer to the applicable specification for specific requirements.

1. **HPV Fastener:** A threaded E-coat square head fastener **for insulation attachment only**. Used into steel, wood plank, minimum 15/32" thick plywood or minimum 7/16" thick oriented strand board (OSB).

2. **InsulTite Fastener**: A threaded Phillips drive fastener used with Versico Insulation Plates for **insulation attachment** to steel or wood decks.

3. **Pre-Assembled ASAP Fasteners:** Versico's InsulTite Fastener pre-assembled with a 3" diameter plastic plate used for **insulation attachment only** on Fully Adhered and Mechanically Attached Roofing Systems. Installed using Olympic Fasteners' Fastening Tool.

4. **CD-10 Nail In Fasteners**: A hammer-driven, non-threaded E-Coat fastener for use with structural concrete decks rated 3,000 psi or greater.

5. **MP 14-10 Concrete Fasteners**: A #14 threaded fastener with a #3 Phillips drive used for minimum 3,000 psi concrete decks.

6. **Polymer Gyptec Fastener:** A non-penetrating, plastic fastener and corresponding plate used with lightweight deck substrates such as fibrous cement and gypsum.

7. **Lite-Deck Fastener**: An oversized diameter fastener and associated 3" Lite-Deck Metal Plate for use on Fully Adhered Roofing Systems to attach insulation to gypsum decks.

8. **Term Bar Nail-In**: A 1-1/4" long expansion anchor with threaded drive pin used for fastening Termination Bar or Seam Fastening Plates to concrete, brick or block walls. The fastener is set by hammering the drive pin into place.

B. **Insulation Fastening Plates**

1. **Insulation Fastening Plates**: A nominal 3" diameter metal plate used for insulation attachment in conjunction with the appropriate Versico Fastener.

2. **SecurFast Insulation Fastening Plates:** A nominal 2-7/8" hexagon metal plate used for insulation attachment in conjunction with the appropriate Versico Fastener.

3. **Accutrac Insulation Plates:** A nominal 3" square, recessed or flat bottomed, metal plate used for insulation attachment in conjunction with the appropriate Versico Fastener. Flat bottom plate is used with manufactured Philips Head fasteners only.

2.06 Vapor /Air Barrier and Primer

A. **General**

If insulation is to be adhered to the vapor retarder with Flexible DASH Adhesive, the vapor retarder must be compatible and shall be fully adhered to the substrate. Available products include Versico's VapAir Seal 725TR Air and Vapor Barrier, VapAir Seal MD Air and Vapor Barrier and spray or roller applied butyl coatings. Installation requirements for Versico's VapAir Seal 725TR Air and Vapor Barrier are identified in **Spec Supplement G-07-20 "Application Procedures for 725TR Air and Vapor Barrier"** and Versico's VapAir Seal MD Air and Vapor Barrier are identified in **Spec Supplement G-12-19 "Application Procedures for Versico's VapAir Seal MD Air and Vapor Barrier"** in the Versico Technical Manual.

B. **Versico VapAir Seal 725TR Air and Vapor Barrier** - A 40-mil thick composite consisting of 35-mil self-adhering rubberized asphalt membrane laminated to an 5-mil UV resistant poly film with an anti-skid surface which is fully compatible with Flexible DASH Adhesive. 725TR can also function as a temporary roof for up to 120 days. Available in rolls 39" wide by 100' long (325 square feet).

C. **Versico VapAir Seal MD Air and Vapor Barrier** – a reinforced composite aluminum foil with self-adhesive SBS backing and removable poly release film. Used for direct application over metal decks. Used for direct application over metal decks. Available in rolls 42.5" wide by 131.23" long (460 square feet).

D. **CAV-GRIP 3V Low-VOC Aerosol Contact Adhesive/Primer:** a low-VOC, methylene chloride-free adhesive that can be used for a variety of applications including: enhancing the bond between Versico's VapAir Seal 725TR and various substrates. Coverage rate is approximately 2,000-2,500 sq. ft. per #40 cylinder and 4,000-5,000 sq. ft. per #85 cylinder as a primer, in a single-sided application.

E. **CCW-702 Primer and 702LV Primer (Low-VOC)** - A single component, solvent based, high tack primer used to provide adhesion between Versico 725TR Air and Vapor Barrier and an approved substrate. Applied by spray or long nap roller with a coverage rating ranging from approximately 300 to 350 square feet per gallon on smooth finishes (i.e., concrete) to 75 square feet per gallon on porous surfaces (i.e., Dens-Deck Prime gypsum board). Available in 5-gallon containers. CCW-702LV Primer contains less than 250g/L VOCs and meets South Coast Air Quality Management District (SCAQMD) and Leadership in Energy and Environmental Design (LEED) Requirements for Volatile Organic Compounds.

F. **CCW-702WB –** a high-tack, water-based contact adhesive for promoting adhesion of Versico air/vapor barrier membranes and an approved substrate (i.e., concrete, Dens-Deck Prime and Securock). Applied by roller, brush or spray with an application rate of approximately 200 sq. ft. per gallon. Available in 5-gallon containers. CCW-702WB Primer contains 57g/L VOCs and meets South Coast Air Quality Management District (SCAQMD) and Leadership in Energy and Environmental Design (LEED) Requirements for Volatile Organic Compounds.

2.07 Edges and Terminations

A. **General**

Products listed below can be used with any of the available Versico Roofing Systems. Refer to the applicable Versico details and installation instruction manuals for specific installation criteria.

B. **Products**

1. **VersiTrim™ 200 Fascia**: A snap-on edge system consisting of a 24 gauge galvanized metal water dam and 40, 50 or 63-mil thick aluminum Kynar 500, clear and colored anodized finish or 22 or 24 gauge steel, Kynar 500 finish. The fascia is available in a variety of colors and heights varying from 5" to 12-1/2". Custom fascias and colors are available upon request. ANSI/SPRI ES-1 certified. Meets up to FM 1-90 approval, refer to Technical Data Bulletin for applicable requirements.

2. **VersiTrim 300 Fascia System**: A snap-on edge system consisting of a 24 gauge galvanized metal springclip water dam and 50 or 63-mil thick aluminum Kynar 500, colored anodized finish or 24 gauge steel, Kynar 500 finish. The fascia is available in a variety of colors and heights varying from 5" to 10". Custom fascias and colors are available upon request. ANSI/SPRI ES-1 certified. Meets up to FM 1-180 approval, refer to Technical Data Bulletin for applicable requirements.

3. **VersiTrim 2000 Standard Fascia:** An anchor bar roof edge fascia system consisting of heavy .100" thick extruded aluminum bar, corrosion resistant stainless steel fasteners and snap-on fascia cover used with Fully Adhered, Mechanically Attached assemblies. Refer to installation instructions for various sizes, colors and accessories ANSI/SPRI ES-1 certified. Also available in **VersiTrim 2000 Extended Fascia** (Up to 13" Face Height) and **VersiTrim 2000 Canted Fascia**. Meets up to FM 1-645 approval, refer to Technical Data Bulletin for applicable requirements.

4. **VersiTrim 3000 Roof Edge System**: A metal anchor bar fascia system consisting of a 20 gauge steel retainer bar, corrosion resistant fasteners and a 32, 40, 50 or 63-mil thick aluminum or 24 gauge steel snap-on fascia cover. It is for use in Fully Adhered and Mechanically Attached Roofing Systems. ANSI/SPRI ES-1 certified. Also available in **VersiTrim 3000XT Roof Edge System** (Up to 13" Face Height). Meets up to FM 1-465 approval, refer to Technical Data Bulletin for applicable requirements.

6. **VersiTrim One Fascia (MA/FA Single Ply):** A snap-on edge system consisting of an extruded aluminum retainer bar, corrosion resistant fasteners and a 24 gauge or 0.040 Kynar finished aluminum fascia cover. Available with a 3" fascia height 12' long. ANSI/SPRI ES-1 certified.

7. **VersiTrim One Edge (MA/FA Single Ply):** A snap-on edge system consisting of a 24 gauge retainer bar, corrosion resistant fasteners and a 24 gauge or 0.040 aluminum Kynar finished fascia cover. A spring clip holds the fascia cover in place. Available in sizes up to 8" fascia height 12' long. ANSI/SPRI ES-1 certified.

8. **Versico Drip Edge:** Designed for use on Fully Adhered and Mechanically Attached Roofing Systems. Includes a 22 gauge continuous 12' pre-punched 90-degree angle cleat and 12' long fascia sections. Incorporates concealed joint covers and strong 1-1/4" ring shank nails to provide long-term holding power. A selection of colors in 24 gauge steel, Kynar® 500 and 32-mil aluminum finish or Kynar 500 is available.

9. **VersiTrim 200/300 Drip Edge:** Pre-fabricated with TPO or PVC-coated metal edging. Heat-weld membrane directly to edge. Available in sizes up to 8" fascia height and in colors: white, gray or tan.

10. **VersiTrim 200 Coping:** Incorporates an anchor cleat with pre-slotted holes, a concealed joint cover and 10' or 12' continuous sections of coping cap consisting of 40, 50 or 63-mil thick Kynar 500, clear and colored anodized finish or 24 gauge steel, Kynar 500 finish. The coping cap is available in a variety of colors and widths. Custom pieces such as tees, crosses, radius copings, etc., are also available. ANSI/SPRI ES-1 certified. Meets up to FM 1-90 approval, refer to Technical Data Bulletin for applicable requirements.

11. **VersiTrim 300 Parapet Wall Coping:** Incorporates an anchor cleat with pre-slotted holes, a concealed joint cover and 10' or 12' continuous sections of coping cap consisting of 50 or 63-mil thick Kynar 500, clear and colored anodized finish or 24 gauge steel, Kynar 500 finish. The coping cap is available in a variety of colors and widths. Custom pieces such as tees, crosses, radius copings, etc., are also available. ANSI/SPRI ES-1 certified. Meets up to FM 1-180 approval, refer to Technical Data Bulletin for applicable requirements.

12. **VersiTrim One Coping:** A snap-on coping edge system consisting of a 24 gauge retainer bar (face side only), corrosion resistant fasteners and a 24 gauge or 0.040 aluminum Kynar finished coping cover. The coping cover is secured by clipping on the retainer bar and fastened on the backside with corrosion resistant fasteners (with rubber washer). Available for wall thicknesses up to 30". ANSI/SPRI ES-1 Certified.

13. **Termination Bar:** A 1" wide and 98-mil thick extruded aluminum bar pre-punched 6" on center which incorporates a sealant ledge to support Lap Sealant and provide increased stability for membrane terminations.

14. **VersiTrim Term Bar Fascia:** A 1.75” wide formed aluminum termination bar with pre-slotted fastening holes for ease of locating and installing. The decorative cover is available in 0.040” aluminum or 24-gauge galvanized steel. VersiTrim Term Bar Fascia is manufactured in 12’ lengths for fewer joints/seams, fewer sections to handle and faster installation.

15. **VersiWeld Coated Metal:** A 24 gauge, galvanized steel sheet coated with a layer of non-reinforced VersiWeld Flashing. The sheet is cut to the appropriate width and used to fabricate metal drip edges or other roof perimeter edging profiles. VersiWeld Membrane may be heat welded directly to the coated metal. Coated metal is available in sheets 4' x 10' and comes packaged 25 sheets per pallet (also available packaged 10 sheets per pallet on a direct ship basis). Available in white, gray or tan.

16. **VersiFlex PVC Coated Metal:** A 24 gauge, galvanized steel sheet coated with a layer of non-reinforced VersiFlex Flashing. The sheet is cut to the appropriate width and used to fabricate metal drip edges or other roof perimeter edging profiles. VersiFlex Membrane may be heat welded directly to the coated metal. Coated metal is available in sheets 4' x 10' and comes packaged 10 sheets per pallet. Available in white, gray, light gray, slate gray or tan.

2.08 Roof Walkways

Walkways are to be specified at all traffic concentration points (i.e., roof hatches, access doors, rooftop ladders, etc.), and if regular maintenance, once a month or more, is necessary to service rooftop equipment.

A. Walkway Types

1. **VersiWeld Heat Weldable Walkway Rolls:** Designed to protect VersiWeld membrane in those areas exposed to repetitive foot traffic or other hazards. Walkway material may be heat welded to VersiWeld membrane using an automated heat welder or hand held heat welder. The diamond plate tread pattern offers superior slip resistance. The walk edges are trimmed in safety yellow to better define the designated traffic flow. Walkway Rolls are 34” wide by 50' long and are nominal 180 mils thick. Available in white, tan or gray.

   NOTE: As an option, walkway pads may be fully adhered to the membrane surface with QA Seam Tape and TPO Primer

2. **VersiFlex PVC Heat Weldable Walkway Rolls:** Manufactured from specially compounded PVC, offering superior tear, puncture and weather resistance. Designed to protect VersiFlex membrane in those areas exposed to repetitive foot traffic or other hazards. Walkway material may be heat welded to VersiFlex membrane using an automated heat welder or hand held heat welder. Walkway Rolls are 36" wide by 60' long and are nominal 80-mils and 110-mils thick. Available in gray only.

3. **VersiWeld TPO Crossgrip Walkway Rolls:** Manufactured from TPO and may be used in lieu of standard VersiWeld TPO Walkway Rolls when a walkway is to be loose-laid and not secured to the membrane. Loose-laid Crossgrip TPO Walkway Rolls are effective for winds up to 55 mph. Rolls are 36” wide by 33’ long, available in white, gray and yellow.

4. **VersiFlex PVC Crossgrip Walkway Rolls:** Manufactured from PVC and may be used in lieu of standard VersiFlex PVC Walkway Rolls when a walkway is to be loose-laid and not secured to the membrane. Loose-laid Crossgrip PVC Walkway Rolls are effective for winds up to 55 mph. Rolls are 36” wide by 33’ long, available in white, gray and yellow.

5. **Other Walkways (For use with all membranes)**

   a) **Versico Interlocking™ Rubber Pavers:** 24" X 24" X 2" thick rubber paver weighing approximately 24 pounds per unit, 6 pounds per square foot manufactured from recycled rubber, which provides a resilient, shock absorbing, weather resistant surface. Designed primarily for use as a walkway or on terrace areas offering a unique, environmentally sound advantage over concrete pavers. Features include freeze/thaw stability, bi-directional drainage and no breakage concerns. Available in black and terra cotta.

   b) **Smooth concrete pavers**, when specified in conjunction with insulation that is mechanically attached, must be loose laid over a slip sheet of membrane or 2 layers of HP Protective Mat. When insulation is attached with Flexible DASH Adhesive, concrete pavers may be placed over one layer of HP Protective Mat. Pavers cannot weigh more than 80 pounds per paper for ease of removal.

c) **Hanover Pedestal Paver**, used for light traffic areas associated with rooftop or garden roof applications. 23-1/2" x 23-1/2" x 2" thick precast concrete pavers weighing 25 psf with an elevated clearance of 1/2" from incorporated footing. Available in 8 standard colors, with special order colors available. The pedestal paver can either be installed in conjunction with a separation layer of HP Protective Mat or using Hanover Pedestal and shims.

d) **Hanover Ballast and Lightweight Ballast Pavers**, 24" x 24" x 1-13/16" thick, Ballast Paver comes in a natural color and a non-slip Diamond finish and weighs 22 lbs/sq. ft. The Lightweight, 23-1/2" x 23-1/2" x 1-1/4" thick, Ballast Paver comes in a natural color and a non-slip diamond finish and weighs 15 lbs/sq. ft. Both pavers can be used as ballast or walkways.

2.09 Other Versico Products

Refer to **Spec Supplement P-01-22 "Related Products"** for additional accessories.

PART III - EXECUTION

Prior to commencing with the installation of any of the VersiFleece Membrane Systems refer to Paragraph 1.05 "Warranty Tables" for applicable components and proper securement method suitable for the appropriate warranty coverage.

Requirements listed in this specification are considered minimum and are intended for the sole purpose of obtaining a Versico Warranty. Additional requirements dictated by Regulatory Agencies, Building Insurance or Specifiers must be complied with and are considered to be beyond the scope of this specification.

3.01 General

A. Safety Data Sheets (SDS) must be on location at all times during transportation, storage and application of materials. The contractor shall follow all safety regulations as recommended by OSHA and other agencies having jurisdiction.

B. To ensure most current installation requirements are met and techniques are followed. Technical Data Bulletin should be available on site.

C. Subject to project conditions, it is recommended to begin the application of this roofing system at the highest point of the project area and work to the lowest point to prevent water infiltration. This will include completion of all flashings, terminations and daily seals.

D. A proper substrate shall be provided by the building owner. The structure shall be sufficient to withstand normal construction loads and live loads.

E. Protect areas of high construction traffic using plywood sheets.

3.02 Roof Deck / Substrate Criteria

A. Proper decking shall be provided by the building owner. The building owner or its designated representative must ensure that the building structure is investigated by a registered engineer to assure its ability to withstand the total weight of the specified roofing system as well as construction and live loads in accordance with all applicable codes. The specifier must also designate the maximum allowable weight and location for material loading and storage on the roof.

B. When insulation/ membrane underlayments are to be mechanically attached, withdrawal resistance tests are strongly suggested to determine the suitability of a roof deck. Refer to **Design Reference DR-06-19 "Withdrawal Resistance Criteria"** in the Versico Technical Manual proper procedures for conducting pullout tests.

C. Defects in the substrate must be reported and documented to the specifier, general contractor and building owner for assessment. The Versico Authorized Contractor shall not proceed with installation unless defects are corrected.

D. On structural concrete decks, when a vapor retarder is not used, gaps in the deck along the perimeter and around penetrations must be sealed along with vertical joints between tilt-up panels, if present, to prevent infiltration of hot humid air and possible moisture contamination resulting from condensation. This is specifically important when adhesive is used to attach the roof insulation.

E. **For all projects** (new or retrofit), the substrate must be relatively even without noticeable high spots or depressions. Accumulated water, ice or snow must be removed to prevent the absorption of moisture in the new roofing

components and roofing system.

F. **Substrate Preparation**

1) Prior to the placement of membrane underlayment, clear the substrate of debris and foreign material that may be harmful to the roofing system. Gaps greater than 1/4" must be filled with an appropriate material.

2) For direct application over an acceptable roof deck/substrate, the substrate must be smooth, steel trowel finished (structural concrete), free of debris, protrusions, sharp edges and loose and foreign material. Cracks or voids in the substrate, greater than 1/4", must be filled with an appropriate material.

3) **On retrofit - recover projects**, cut and remove wet insulation, as identified by the specifier, and fill all voids with new insulation of type specified so it is relatively flush (+/- 1/4") with the existing surface.

   a) Entrapment of water between the old and new membrane can damage and deteriorate new insulation/underlayment between the two membranes. **If a vapor retarder or air barrier is not specified**, Versico recommends the existing membrane be perforated to avoid potential moisture accumulation and to allow the detection of moisture to enable the building owner to take corrective action.

   b) **For existing PVC membranes**, when insulation/membrane underlayment are to be mechanically attached, in lieu of total removal, the membrane may be cut into maximum 10' by 10' sections. All PVC flashings at the perimeter, roof drains and roof penetrations must be removed.

   c) When installing this roofing system over an existing **gravel surfaced built-up roof**, **loose gravel must be removed**. Power Brooming or Hydro Vacuuming is recommended by Versico to remove the loose gravel or dirt, which may trap moisture. Any uneven areas of the substrate must be leveled to prevent insulation from bridging.

   d) When installing this roofing system over existing TPO Membranes less than 2 years old or EPDM Membrane, use X-Tenda Coat Membrane Cleaner or X-Tenda Coat EPDM Activator. Dilute the product per the instruction label., Spray the surface and let stand for 15 minutes, prior to power washing.

      1) On retrofit projects, all existing phenolic insulation must be removed.
      2) Refer to table below for other Recover/Retro-fit considerations.

NOTE: When VersiFleece membrane is installed directly over an existing single-ply roof, the existing single-ply roof must be secured with HPV or HPVX Fasteners and 2” diameter Seam Plates at 12” O.C. at all deck to wall junctions, angle changes greater than 2:12 and around curbs/skylights, regardless of warranty duration or warranty wind speed. Fasten directly through VersiFleece membrane and existing single-ply roof to the deck OR fasten through the existing single-ply roof to the deck, prior to application of VersiFleece. Additional fastening of the existing roof may be utilized to enhance the wind uplift resistance of the existing roof, Contact Versico for further information.

G. The following table identifies the acceptable roof decks/substrates and the minimum underlayment requirements:

Roof Deck & Substrate Criteria for Fully Adhered Roofing Systems

Acceptable Roof Deck/Substrate	VersiFleece TPO Membrane	VersiFleece PVC Membrane	VersiFleece KEE HP Membrane
NEW CONSTRUCTION			
Steel (min. 22 gauge)(1)	Insulation	Insulation	Insulation
Structural Concrete (min. 3000 psi) or Gypsum	Direct Application	Direct Application	Direct Application
Plywood (min. 15/32" thick) or Oriented Strand Board (min. 7/16" thick)	Direct Application	Direct Application	Direct Application
Wood Planks (minimum 3/4" thick)	Direct Application	Direct Application	Direct Application
Fibrous Cement	Insulation	Insulation	Insulation
Lightweight Insulating Concrete	Direct Application (2)	Direct Application (2)	Direct Application (2)
RETROFIT / NO TEAR-OFF			
Existing Smooth Surface BUR (7) or Mineral Surface Cap Sheet	Direct Application (8)	Direct Application (8)	Direct Application (8)
Gravel Surfaced Asphaltic BUR (3)(4)	Insulation	Insulation	Insulation
Coal Tar Pitch (3)(4)	Insulation	Insulation	Insulation
Modified Bitumen	Direct Application (6)(8)	Direct Application (6)(8)	Direct Application (6)(8)
Existing Single-Ply	Direct Application (5)	Insulation (5)	Direct Application (5)
Existing SPF	Insulation	Insulation	Insulation
RETROFIT / TEAR-OFF			
Existing roof material removed (regardless of deck type)	Insulation	Insulation	Insulation

Notes:

(1) Local codes must be consulted regarding thermal barrier requirements.
(2) VersiFleece Fully Adhered Roofing System may be specified directly over a new approved cellular or perlite lightweight insulating concrete substrate, refer to Attachment I for additional information.
(3) Loose gravel must be removed to avoid moisture entrapment.
(4) Existing coal tar could drip back into the building, especially when new insulation does not provide sufficient thermal value to prevent the surface of the coal tar from softening.
(5) An approved mechanically attached insulation/underlayment is required over existing ballasted single-ply systems. For Direct Application Versico may be contacted for required substrate preparation.
(6) Direct application permitted over smooth or granular surfaced modified bitumen. Membrane shall be positioned with length of sheets parallel to modified bitumen field seams. Efforts should be made to ensure seams of the VersiFleece system are parallel to existing seams, when new splices run perpendicular, the field seam must be carefully inspected especially at intersections.
(7) Existing Type III or IV smooth asphalt BUR Only
(8) Possible staining/discoloration of the white membrane may result when installing this system directly over existing smooth surfaced BUR or modified bitumen, especially along the selvage edge where fleece backing is not present. If aesthetics are critical, an approved insulation should be specified beneath the membrane
(9) Silicone-coated substrates must be scarified (coating removed) prior to the application of Flexible DASH Adhesive.

3.03 Insulation / Underlayment

A. **General**

1. Roof insulation thickness must be determined by the thermal value required for each project and may be subject to code approval limitations. On projects where a vapor retarder is used, the specifier must calculate insulation thickness to ensure the temperature at the vapor retarder will not fall below the dew point.

2. On projects where coal tar pitch is used, sufficient insulation must be used to prevent softening of the coal tar and possible dripping into the building, especially when the insulation is mechanically attached.

4. Multiple layers of insulation are recommended with all joints staggered between layers.

5. Do not install more insulation/underlayment than can be covered by membrane in the same day.

6. All insulation boards must be butted together with no gaps greater than 1/4". Gaps greater than 1/4" are not acceptable.

7. Insulation should be protected from repetitive foot or construction traffic during or after installation of the roofing system.

8. Adhered or “Peel and Stick” Vapor Retarders, when used, may pull away from angle changes due to inadequate adhesion or poor substrate preparation. When insulation is to be adhered to the Vapor Retarder, mechanical securement is required along the perimeter. Insulation shall be mechanically attached with plates and fasteners at 12” o.c. (within 6” of the angle change).

NOTE: Projects utilizing Versico’s “Peel and Stick” Vapor Barrier must comply with Versico’s installation requirement outlined in Spec Supplement G-07-20 “Application Procedures for Versico 725 Air and Vapor Barrier”. Applicable Details should also be referenced for Vapor Retarder terminations along angle changes.

9. Restrictions:

   a) Versico Roofing Systems cannot be specified in conjunction with existing or new Phenolic Insulation.

   b) Fiberglass insulation cannot be specified even if overlaid with additional insulation or membrane underlayment.

3.04 Insulation Attachment

A. General

Prior to proceeding with insulation securement refer to Warranty Tables, Paragraph 1.05, for attachment method and appropriate fastening density required for the specific Versico Warranty.

B. Mechanical Attachment

Insulation fastening density will vary based on insulation type, thickness, and required warranty. Warranty Tables in Paragraph 1.05 should be referenced for fastening density and the appropriate Versico detail may be consulted to identify acceptable fastening pattern.

1. For code compliance, increased fastening density may be required depending upon project wind speed and wind uplift requirement. Refer to **Design Reference DR-05-23 “Insulation Fastening Patterns”** for fastening pattern reference.

2. When insulation securement is to comply with Factory Mutual (FM) approvals, follow the requirements of the specifier concerning additional securement at the roof perimeter and corners. Also refer to **Design Reference DR-05-23 “Insulation Fastening Patterns”** for various fastening patterns.

3. On Reroof/No Tear off projects with a maximum roof height of 40', any Versico Insulation (i.e., 1/2” SecurShield HD, Versico Recovery Board, Polyisocyanurate less than 1-1/2" thick) may be secured at the minimum rate of 11 Fasteners per 4' x 8' board (5 Fasteners per 4' x 4' board).

4. When Oriented strand board (OSB) is specified for membrane underlayment, utilize DuraFaceR OSB/Polyiso Composite, mechanically fastened to the deck at the rate 17 fasteners for 4 x 8 board in accordance with Versico Details. When positioning OSB, butt edges and stagger joints of adjacent panels.

C. Adhesive Attachment

Versico Urethane Adhesive Full Spray (Flexible DASH) or Bead applied (Flexible DASH or OlyBond) or Equipment (Rig) Splatter (Flexible DASH) may be used. When bead adhesive is specified bead spacing will vary based on Warranty coverage, refer to Warranty Tables, Paragraph 1.05 and appropriate Versico Details. **CAUTION:** Ensure the bead of adhesive is 2” from edge of board for 4” o.c. bead spacing and 3” from edge of board for 6” and 12” o.c. bead spacing. Refer to **Detail A-27.7** in **Spec Supplement G-08-23**.

CAUTION: Apply adhesive bead so that the distance from the edge of the board does not exceed half the bead spacing (i.e. within 6” of bead spacing of 12” O.C.).

CAUTION: Do not apply urethane adhesives directly to un-weathered asphalt, (new or residual) refer to Spec Supplement G-02-22 “VersiFleece and Insulation Attachment and Coverage Rates with Flexible DASH Adhesive”.

CAUTION: Gaps between horizontal and vertical surfaces of the roof area as well as gaps around penetrations must be sealed to prevent interior warm air from infiltrating and condensing within the roofing assembly. Condensing moisture could weaken bottom insulation facer and eventually result in dislodgement or loose boards when adhesive is used.

1. Flexible DASH may be used in an Equipment (Rig) Splatter application method, in lieu of, full spray or bead attachment for adhering Insulation or VersiFleece Membranes to a smooth, flat surface. Flexible DASH may be dispensed by using Dual Tanks or either a HULK Spray Rig or Patriot Spray Rig with a VEE-AIR Spray Gun to achieve 50% coverage of the substrate at a rate of 1/2 gallon per 100 square feet. To achieve proper coverage, spray in a horizontal, sweeping motion, from a minimum of 24" height, overlapping each new pass with the previous pass by 50%.

2. Refer to **Spec Supplement G-15-22 "Flexible DASH Adhesive Equipment and Set-Up Requirements for Full Spray, Bead and Splatter Applications"** and **G-02-22 "VersiFleece and Insulation Attachment and Coverage Rates with Flexible DASH Adhesive"** for equipment settings, application procedures and coverage rates.

3. On FM Global insured projects, consult FM Global's local representative concerning the use of adhesive to attach insulation to steel decks.

4. Check to ensure the substrate is dry. Adhesive cannot be applied to a wet or damp surface.

5. Apply Adhesive over the dry substrate area at the coverage rates indicated in **Spec Supplement G-02-22 "VersiFleece and Insulation Attachment and Coverage Rates with Flexible DASH Adhesive**".

6. Allow the adhesive to rise up approximately 1/8" to 3/4", depending on dispensing method, and develop strings prior to setting insulation boards into adhesive.

   Note: String-time is measured by touching the adhesive with a splice wipe and looking for development of "strings" of adhesive as you pull the splice wipe out of the adhesive. With Flexible DASH Adhesive, string time is generally around 1-1/2 – 2 minutes after application at room temperature.

7. **Walk the boards into the adhesive and roll using the 30" wide, 150 pound weighted segmented steel roller** to ensure full embedment. Optimal set up time should be approximately 5 to 7 minutes.

   CAUTION: Walking on the boards immediately after placement in adhesive can cause slippage/movement until the adhesive has started to set up.

   CAUTION: If the boards easily slide, string time has not been achieved.

   On roofs with a slope greater than 1/2" in 12", begin adhering insulation at the low point and work upward to avoid slippage.

   One person should be designated to walk and roll in all boards. Relief cuts may be necessary to allow lifted board to lay flat, or constant weight (a minimum 10 lbs for 5-15 minutes per lifted area) may be necessary to achieve adequate adhesion.

8. Refer to **Spec Supplement G-02-22 "VersiFleece and Insulation Attachment and Coverage Rates with Flexible DASH Adhesive"** for application procedures and coverage rates.

   NOTE: Projects utilizing Versico's "Peel and Stick" Vapor Barrier must comply with Versico's installation requirement outlined in Spec Supplement G-07-20 "Application Procedures for Versico 725 Air and Vapor Barrier". Applicable Details should also be referenced for Vapor Retarder terminations along angle changes.

3.05 Membrane Placement and Securement Criteria

A. **General**

1. Do not apply Flexible DASH Adhesive when surface and/or ambient temperatures are below 25° F (-4°C). The temperature of Flexible DASH Adhesive must be between 70° F (21°C) and 90°F (32°C), at the time of use. Use blanket heaters and/or hot boxes when necessary.

2. Flexible DASH Adhesive may be applied when surface and/or ambient temperatures are below 25° F (-4°C) when heated equipment is used that includes the following: heated blankets, preheater, and heated hose.

3. When using Flexible DASH Adhesive in non-heated spray equipment, substrate and/or ambient temperatures must be between 25ºF (-4ºC) and 120ºF (49ºC).

4. The coverage rate of Flexible DASH Adhesive used to adhere the membrane are in the table below:

Flexible DASH Adhesive Coverage Rates					
Approximate Coverage Rate (Sq. Ft.)					
Package Type	**Full Spray**	**Splatter**	**4" o.c.**	**6" o.c.**	**12" o.c.**
Dual Cartridges	N/A	N/A	100-200	200-300	400-600
Dual Tanks	N/A	2,600-2,800	1,100-1,300	1,700-1,900	3,500-3,700
5-Gallon Jugs	600-1,000	1,800-2,000	670-900	1,000-1,250	2,000-2,500
15-Gallon Drums	1,800-3,000	5,400-6,000	2,110-2,700	3,000-3,750	6,000-7,500
50-Gallon Drums	5,000-10,000	18,000-20,000	6,700-9,000	10,000-12,500	20,000-25,000

5. **Sweep** all loose debris from the substrate.

6. **Verify** all sections are dry prior to proceeding with the application of Flexible DASH Adhesive/VersiFleece membrane.

   CAUTION: Ensure that water does not flow beneath any completed sections of the membrane system by completing all flashings, terminations and daily seals by the end of each work day.

B. **TPO/PVC/KEE HP Membrane Placement/Bonding –Option #1**

1. Position and unroll successive sheets and align to provide a minimum 2" overlap (use pre-marked overlap line) along the selvage edge. At end laps (along the width of the sheet), membrane shall be butted together and to be overlaid with minimum 6" wide VersiWeld/VersiFlex Reinforced Membrane hot air welded on all edges.

2. Fold adjacent sheets in half lengthwise (end to end) to expose approximately 10' wide (width of the sheet) by half the length of the sheet substrate area.

   Notes: Fold selvage sheet edges (along the length of the sheets) under the membrane to prevent overspray onto the splice area.

   Membrane which has the adjacent sheet spliced over it should be adhered to the substrate first. This will prevent the selvage edge splice area from being contaminated by setting splice edge into urethane adhesive.

3. **Apply Flexible DASH Adhesive** onto the substrate and allow to rise approximately 1/8" to 3/4", depending on dispensing method, and develop strings when touched with a Splice Wipe. Roll the membrane with a 30" wide, 150 lb weighted segmented steel roller. **For extruded applications, apply adhesive at 4", 6" or 12" on center with a minimum 1/2" wet bead. Refer to Tables IV & V in Paragraph 1.05 for Bead Spacing.**

4. **HydroBond Adhesive** can be applied directly to the substrate using an airless spray machine or a medium nap roller. Do not apply HydroBond to splice areas to be hot-air welded. When applying HydroBond, ensure that the adhesive has not dried before the membrane is laid in place. This is a wet lay-in adhesive; drying occurs rapidly during high temperatures, and care must be taken to ensure the membrane is laid into wet adhesive. To ensure a wet lay-in, adjust the application technique according to weather conditions. Avoid heavy or thin application of adhesive. Roll the membrane into the wet, adhesive coated substrate while avoiding wrinkles. Immediately brush down the bonded portion of the membrane with a soft-bristle push broom or a clean, dry roller applicator to achieve maximum contact and to work out any air bubbles. Immediately after brooming out from the center, roll the membrane in all directions with a minimum 100–150-lb (45–68 kg) weighted roller to achieve maximum contact.

5. Apply **Flexible DASH or HydroBond Adhesive** to the substrate and continue process described above until all sheets are fully bonded, allowing for the necessary splice overlaps. At end laps (along the width of the sheet), membrane shall be butted together and to be overlaid with minimum 6" wide VersiWeld/VersiFlex Reinforced Membrane hot air welded on all edges.

C. **TPO/PVC/KEE HP Membrane Placement/Bonding – Option #2**

1. **Position** first roll of VersiFleece membrane at the designated starting point on the roof.

2. **Chalk** a line to ensure proper positioning of the VersiFleece membrane.

3. **Unroll** 10' to 15' of membrane to ensure it is properly aligned and fold unrolled section back over roll.

4. **Apply Flexible DASH Adhesive** over the substrate area to be covered by the membrane that is folded back. **For extruded applications, apply adhesive at 4", 6" or 12" on center with a minimum ½" wet bead.**

5. Once the Flexible DASH Adhesive is applied in place and has begun to rise approximately 1/8" in height and **develop strings when touched with a Splice Wipe**, slide the membrane back into the adhesive.

6. **Roll** the membrane using a 30" wide, 150 pound weighted segmented steel roller, to set the membrane into the adhesive.

7. **HydroBond Adhesive** can be applied directly to the substrate using an airless spray machine or a medium nap roller. Do not apply HydroBond to splice areas to be hot-air welded. When applying HydroBond, ensure that the adhesive has not dried before the membrane is laid in place. This is a wet lay-in adhesive; drying occurs rapidly during high temperatures, and care must be taken to ensure the membrane is laid into wet adhesive. To ensure a wet lay-in, adjust the application technique according to weather conditions. Avoid heavy or thin application of adhesive. Roll the membrane into the wet, adhesive coated substrate while avoiding wrinkles. Immediately brush down the bonded portion of the membrane with a soft-bristle push broom or a clean, dry roller applicator to achieve maximum contact and to work out any air bubbles. Immediately after brooming out from the center, roll the membrane in all directions with a minimum 100–150-lb (45–68 kg) weighted roller to achieve maximum contact.

8. Proceed to the front of the roll and continue to apply **Flexible DASH or HydroBond Adhesive** and roll the VersiFleece membrane into the adhesive. At the end of the roll, leave approximately 18" unadhered (to be folded back to prevent overspraying when installing the adjoining sheet).

9. Once the first sheet is positioned, measure to allow for a minimum (Refer to Option #1) overlap along the length of the sheet. At end laps, membrane shall be butted together and overlaid with a minimum 6" wide VersiWeld/VersiFlex Reinforced Membrane hot air welded on all edges. (Cut edges of VersiWeld membrane shall be sealed with TPO Cut Edge Sealant.)

10. Position the next roll and repeat the process as described above.

D. **Do not apply Flexible DASH or HydroBond Adhesive to splice areas.** If Flexible DASH or HydroBond Adhesive should contaminate the splice area, immediately (while Flexible DASH adhesive is still in liquid form) clean with Weathered Membrane Cleaner for TPO membranes or PVC and KEE HP Membrane Cleaner for PVC and KEE HP membranes. Cured Adhesive which has dried may be removed with paint remover as referenced in Paragraph 3.06 B.3.

3.06 Heat Welding Procedures (VersiWeld/VersiFlex)

A. **General**

1. Hot air weld the VersiFleece membrane sheets using the Automatic Hot Air Welding Machine or Hot Air Hand Welder and silicone roller. For description of heat welding equipment and generator/electrical requirements, refer to **Spec Supplement T-01-23 "Heat Welding Equipment".**

2. When roof slope exceeds 5 inches per horizontal foot, use of the Automatic Hot Air Welding Machine may become more difficult working parallel with the slope it may be necessary to run the sheets perpendicular to avoid the use of Hand Held Hot Air Welder.

3. Membrane has a selvage edge (fleece-backing is discontinued) along the length of the sheet for membrane welding.

   Selvage edges are not provided along the width of the membrane. Adjoining membrane sheets shall be butted together, overlaid with a minimum 6" wide VersiWeld/VersiFlex Reinforced Membrane and hot air welded on all edges. Seal all VersiWeld/VersiFlex membrane edges (where scrim reinforcement is exposed) with Cut-Edge Sealant.

   Note: When using VersiFleece TPO 115- or 135-mil membrane or VersiFleece PVC 135-mil membrane, a surface splice of non-reinforced flashing or "T-Joint" Cover must be applied over all "T" joint splice

intersections.

B. Check the surfaces of the membrane to be hot air welded to ensure they are properly prepared as outlined below:

1. Membrane Cleaning - The surfaces to be hot air welded must be clean. Membrane overlaps that become contaminated with field dirt must be cleaned with Weathered Membrane Cleaner (VersiWeld) or PVC and KEE HP PVC Membrane Cleaner (VersiFlex) and wiped dry with a clean Splice Wipe. No residual dirt or contaminants should be evident.

2. Exposed Membrane Seam Preparation - Surface oxidation of membrane will occur upon exposure to heat and sunlight. After exposure to the elements, membrane must be cleaned with Weathered or PVC and KEE HP Membrane Cleaner prior to hot air welding as follows:

   a) Apply Weathered Membrane Cleaner (VersiWeld) or PVC and KEE HP Membrane Cleaner (VersiFlex) to the surface of the membrane which has been exposed using a clean Splice Wipe or other white natural fiber (cotton) rag or ScotchBrite type pad and wipe along the direction of the seam.

      If natural fiber rags are used, they must be white to prevent fabric dye from discoloring the membrane.

      Prior to hot air welding, wipe the surface where Weathered Membrane Cleaner (VersiWeld) or PVC and KEE HP Membrane Cleaner (VersiFlex) has been applied with a clean, dry Splice Wipe or other white rag to remove cleaner residue.

   b) Weathered Membrane Cleaner (VersiWeld) will achieve approximately 600 linear feet (one surface) of coverage per gallon for a standard hot air welded splice area. PVC and KEE HP Membrane Cleaner (VersiFlex) will achieve approximately 400 square feet (one surface) of coverage per gallon for a standard heat welded splice area.

   c) The membrane can typically be repaired up to 6 months to a year with the standard cleaning method referenced above. In cases where the standard cleaning method is not sufficient, additional scrubbing and cleaning will be required. Refer to Paragraph 3.07-B.

3. Check surfaces of the VersiFleece TPO/PVC/KEE HP membrane around details (i.e., walls, curbs, vents, etc.) for evidence of Flexible DASH Adhesive overspray since proper heat welding of flashing will not be accomplished if overspray is present. Overspray shall be removed as follow:

   a) Apply a paint remover such as Tal-Strip® Extra Strength manufactured by Mar-Hyde® Corporation (can be purchased at most automotive centers) to the overspray area and allow to remain on the membrane surface approximately 5 minutes.
   b) Remove residue with a Splice Wipe or clean cloth. Wipe cleaned area with Weathered Membrane Cleaner (TPO) or PVC and KEE HP Membrane Cleaner (PVC or KEE HP Only) prior to heat welding (Acetone may be used in lieu of PVC and KEE HP Membrane Cleaner where VOC requirements are in effect).

C. **Automatic and/or Hand Held Hot Air Welder Equipment**

1. Refer to **Spec Supplement T-01-23 – "Heat Welding Equipment"** for:

   a. Temperature Settings
   b. Equipment Set-up
   c. Additional Information

D. **Membrane Welding**

1. Prepare the Automatic Hot Air Welding Machine and allow it to warm for approximately 5 to 10 minutes to reach operating temperature.

2. Perform test trials before welding to ensure proper welding is achieved.

3. Position the Automatic Hot Air Welding Machine properly prior to seaming with the guide handle pointing in the same direction the machine will move along the seam.

4. Lift the overlapping membrane sheet and insert the blower nozzle of the Automatic Hot Air Welding Machine between the overlap. Immediately begin moving the machine along the seam to prevent burning the membrane.

5. Weight plates provided on Automatic Welders must be utilized.

6. Proceed along the seam ensuring that the small guide wheel in front of the machine aligns with the edge of the top membrane sheet. Guide the machine from the front only.

   CAUTION: Ensure the power cord has plenty of slack to prevent dragging the machine off course (which could result from a tightly stretched cord).

7. At all splice intersections, roll the seam with a silicone roller to ensure a continuous hot air welded seam (the membrane should be creased into any membrane step-off with the edge of the silicone roller). A false weld may result due to surface irregularities created by multiple thicknesses of VersiFleece membrane sheets.

   Note: When using VersiFleece TPO 115- or 135-mil membrane or VersiFleece PVC/KEE HP 135-mil membrane, a surface splice of VersiWeld/VersiFlex Non-Reinforced Flashing or T-Joint Cover must be applied over all "T" joint splice intersections. T-joint covers are also required along the end-lap overlays regardless of membrane thickness.

8. To remove the Automatic Hot Air Welding Machine from the finished splice, stop the movement of the machine and immediately remove the nozzle from the seam area. Mark the end of the hot air welded seam with a water-soluble marker for easy identification. A Hand Held Welder will be necessary to complete the weld in the area between where the Automatic Hot Air Welding Machine is stopped and restarted.

9. All membranes, at end laps, a minimum 6" wide, reinforced coverstrip must be used in conjunction with applicable primer.

E. **Preventing Membrane Creeping During Welding**

The operator of automatic welding equipment must apply foot pressure to the membrane, keeping the membrane tight under the welder. Refer to **Spec Supplement T-01-23 – "Heat Welding Equipment"** for additional information.

F. **Test Cuts**

Perform a test weld at least at the start of work each morning and afternoon. Refer to **Spec Supplement T-01-23 – "Heat Welding Equipment"** for additional information.

G. **Seam Probing**

A blunt or dull cotter pin puller is recommended to probe all heat-welded seams. Probing seams must be done once heat welds have thoroughly cooled. Refer to **Spec Supplement T-01-23 – "Heat Welding Equipment"** for additional information.

3.07 WELDING PROBLEMS/REPAIRS

A. A Hand Held Hot Air Welder and a 2 inch wide silicone roller must be used when repairing the VersiWeld or VersiFlex VersiFleece membrane. When the entire hot air welded seam is to be overlaid, an Automatic Hot Air Welding Machine may be used.

B. Prior to proceeding with any repair procedure, the area to be repaired must be cleaned and any material which has been exposed approximately 7 days must be prepared with Versico Weathered Membrane Cleaner (VersiWeld) or PVC and KEE HP Membrane Cleaner (VersiFlex) as outlined in **Spec Supplement T-01-23 "Heat Welding Equipment Use and Procedures Thermoplastic Membranes**", Exposed Membrane Seam Preparation. The membrane can typically be repaired up to 6 months to a year with a standard cleaning method. In cases where the standard cleaning method is not sufficient, the following procedures must be used:

   1. Scrub the area to be welded with a "Scotch Brite" pad and appropriate Membrane Cleaner. The cleaner will become discolored during this procedure.

   2. Clean all residue from the area to be welded with a Splice Wipe or clean rag.

   3. Weld the new membrane to the cleaned area using standard welding procedures.

C. Voids in welded seams can be repaired using a Hand Held Hot Air Welder and a silicone roller.

D. Position the hand held welder facing into void so hot air is forced between overlapping membranes. Roll the top membrane surface using positive pressure toward the outer edge until the heated membrane surfaces are fused.

E. Exposed scrim-reinforcement (resulting from scorching surface of membrane) and test cut areas must be repaired by overlaying the damaged area with a separate piece of membrane with rounded corners. The overlay must extend a minimum of 2 inches past the area to be repaired.

F. Probe all edges of the overlay once cooled to ensure a proper weld has been achieved.

G. Seal all cut edges of VersiWeld reinforced membrane with TPO Cut-Edge Sealant. PVC Cut-Edge Sealant is not required for VersiFlex membrane.

3.08 Flashings

For other requirements which must be complied with in order for Versico warranty to be issued, refer to Spec Supplement G-04-22 "Flashing Consideration/Metal Work".

A. **General Considerations**

1. All existing loose flashing must be removed prior to the application of new flashing. New membrane flashing must extend above all existing intact flashing but must not conceal weep holes or cover existing through wall counter flashing.

2. Deck to wall joints, vertical joints between tilt up panels, and any gaps in metal walls must be sealed to prevent any infiltration and possible condensations beneath the membrane. Refer to appropriate Versico Details for recommendation.

3. Install surface mounted reglets and compression bar terminations directly to the wall surface.

4. In areas where metal counterflashing is used as the vertical termination, the counterflashing must be sealed with a rubber grade caulking to prevent moisture migration behind the new wall flashing.

5. **At roof drains and compression seal terminations** such as terminations bars and coping stones, the **fleece-backing must be removed** from the back of the membrane so Water Cut-Off Mastic can be applied directly to the VersiFleece membrane surface.

   a. To remove fleece-backing utilize a Hand Held Hot Air Welder and apply heat in a back and forth motion over the area of where the fleece is to be removed. Fleece will melt and the bottom of the membrane will be exposed.

6. Cut-edges of VersiFleece TPO membrane, where scrim reinforcement is exposed, must be sealed with TPO Cut-Edge Sealant (not required on vertical surfaces). The use of PVC Cut-Edge Sealant on cut edges of VersiFlex VersiFleece membrane is not required, but it is recommended, regardless of warranty duration.

7. Care must be taken when setting the flashing to avoid bridging greater than 3/4 inch at angle changes (i.e., where a parapet or roof penetration meets the roof deck). This can be accomplished by creasing the membrane into the angle change.

8. All vertical EPDM field splices at the base of a wall or curb must be overlaid with a Pressure-Sensitive "T" Joint Cover, 6" wide section (with rounded corners) of VersiGard Pressure-Sensitive Flashing or VersiGard White uncured Peel & Stick Flashing centered over the field splice in accordance with the applicable Versico Details. When 60-mil or greater Reinforced VersiWeld or 80-mil VersiFlex Non-Fleece Membrane is used for wall/curb flashing resulting splice intersection must be overlaid with appropriate "T"-Joint cover.

1. Terminate the edges of the installed membrane in accordance with Versico's applicable Termination Details.

9. On all Total System Warranty projects, Versico's Termination Bar, in conjunction with Water Cut-Off Mastic, must be installed under all metal counterflashings used for vertical wall terminations.

10. The height of the new wall flashing and termination must extend above the anticipated water level (due to heavy rain) or slush line (due to water under accumulated snow).

11. The Specifier must examine structural supports for rooftop equipment to determine if reasonable access to the membrane beneath the equipment is provided.

12. Bitumen based roof cement must be removed or concealed with an acceptable underlayment.

13. When sleepers are used for mounting rooftop equipment, they must be designed to provide adequate support. An appropriate detail must be selected to prevent depression of the insulation and possible damage to the membrane.

    NOTE: When sleeper mounted pipe and gas lines running perpendicular to roof slope should be elevated to reduce forces caused by melting/sliding snow. Designer may consider the utilization of a support system secured to roof structure and properly flashed.

14. Existing Roof Tie-Ins

    a. Depending on the type of the existing roofing system, the tie-in method will vary. Total isolation between the two roofing systems or weep holes may be required to address moisture migration from one roofing system to the other. Refer to appropriate TPC-13 Detail, contact Versico for further information. If constant compression is required, ensure fleece is removed from the bottom of the membrane.

15. Flashing of Difficult Penetrations, refer to **Spec Supplement G-11-20 for "LIQUISEAL Liquid Flashing"** for additional information and specific requirements.

B. **Walls, Parapets, Curbs, Skylights, etc.**

1. Use continuous deck membrane where feasible as outlined in appropriate Versico Detail.

2. When the use of continuous deck membrane for wall flashing is not feasible, a separate piece of Non-Fleece Cured Membrane may be used in accordance with appropriate Versico Detail.

   When a separate piece of Non-Fleece Cured membrane is used, adhere membrane to the wall or curb with appropriate Bonding Adhesive. Terminate in accordance to the applicable Versico Termination Details.

3. When using a separate piece of Non-Fleece membrane for wall flashing should comply with minimum membrane thickness as outlined in Warranty Tables in the appropriate Thermoplastic specifications.

4. As an alternative to the use of a separate piece of Non-Fleece Cured Membrane, a separate piece of VersiFleece membrane can be used for wall/curb flashings if a selvage edge is provided.

5. At angle changes along walls, curbs, skylights, etc., for warranties up to 20 years, VersiFleece membrane must be adhered in Flexible DASH Adhesive beads placed directly at the angle change and an additional bead spaced a maximum of 3" away from the first bead (at the angle change) see **Detail VF-12.1A** and **VF-12.2A**. For warranties over 20 years, mechanical securement of the membrane is required.

6. Adhere **VersiFleece** membrane to the wall with **Flexible DASH Adhesive with full spray.** Allow extra time for Flexible DASH Adhesive to gain green strength prior to setting membrane in vertical surface.

   NOTE: Splatter Application is not approved for vertical wall attachment.

   a. VersiFleece membrane may be fully adhered with appropriate Bonding Adhesive, however, a coat of bonding adhesive must be first applied to the fleece backing and allowed to dry. Then apply a standard coat of Bonding Adhesive on the wall a second layer over the dried coat of Bonding Adhesive on the fleece membrane, then and allow to properly dry.

   b. VersiFleece membrane may be adhered to vertical surfaces with CAV-GRIP 3V Low-VOC aerosol adhesive. Spray wall and back of the membrane utilizing 50% overlap and 100% coverage.

7. When VersiFleece membrane is used as wall/curb flashing, the **fleece-backing must be removed along the top edge of the membrane prior to completing compression seal terminations** so Water Cut-Off Mastic can be applied directly to the membrane surface. This can be accomplished by applying heat to the fleece until the bottom of the membrane is exposed.

8. For **corner flashing** requirements, refer to the applicable Versico Details included at the end of this section.

9. For re-roofing projects where residual asphalt may be present separation must be provided between the asphalt and White Membranes to avoid possible discoloration and permanent staining. Refer to applicable Versico Detail or Versico may be contacted for other recommendations.

C. **Metal Edge Terminations**

1. The width of the perimeter wood nailer to which the metal edge is to be secured must extend beyond the width of the metal edge deck flange.

2. All shop fabricated metal must incorporate a continuous cleat (min. 22 ga.) and must be secured at least 6 inches on center. Or as approved by the Specifier, whichever is greater.

3. Pre-Manufactured metal edging must be secured to the wood nailer as specified by the respective manufacturer.

4. Refer to the appropriate Versico Detail for flashing options and requirements and **Design Reference DR-12-18 "Metal Edgings"** for applicable wind uplift achieved using the various Versico supplied metal.

D. **Expansion Joints**

At expansion joints, a separate section of VersiFleece membrane installed with the fleece-backing side facing up beneath the field membrane may be required. Refer to the applicable Versico Details for installation requirements.

E. **Roof Drains**

When the VersiFleece membrane extends into the drain sump/clamping ring, **Fleece-backing must be removed** from the underside of the membrane so Water Cut-Off Mastic can be applied directly to the membrane surface. Apply heat to fleece material until the bottom of the membrane is exposed. As an option, a separate section of Non-Fleece Membrane can be extended into the drain sump. Refer to applicable Versico Details for various flashing options.

Only drain strainers that have been approved by the specifier in accordance with all applicable codes may be used.

F. **VersiWeld/VersiFlex Rib Profiles**

1. The Rib Profile is recommended for use with VersiFleece TPO and PVC adhered roofing systems.

2. The VersiWeld/VersiFlex Rib Profiles should be positioned parallel to the laps of the installed TPO/PVC roofing system and parallel with the roof slope where possible.

3. Ensure that all welding surfaces are clean and dry. Inspect all seam areas for proper weld prior to installing VersiWeld/VersiFlex Rib Profile.

4. Rib Profile spacing can be individually determined to achieve the desired appearance.

5. Connecting multiple ribs is achieved by using fiberglass pins. Insert a pin half-way into the end of one profile. Connect the adjoining rib by inserting the exposed end of the pin into the alignment hole. Repeat previous steps for additional TPO/PVC Rib profiles.

6. Consult the VersiWeld or VersiFlex Rib Profile installation guides for instructions on proper installation techniques.

G. **Other Penetrations**

1. Thermoplastic VersiFleece Membrane (TPO/PVC/KEE HP PVC) with Warranties of 20 Year or greater must incorporate Versico supplied pre-fabricated accessories to seal pipes, corners, sealant pockets, etc.

2. All Projects, regardless of Warranty Duration, shall incorporate Versico supplied pre-fabricated accessories to seal pipes, corners, sealant pockets, etc., when feasible. When field fabrication is required, the flashing material shall not be less than 60-mils thick.

3. For wall and curb flashing, the required thickness shall equal the deck membrane thickness.

4. For all membranes, Flexible Penetrations (braided cables, conduits, wires, etc.) must be enclosed in a stable "goose neck".

   Apply a field fabricated pipe flashing using VersiWeld TPO or VersiFlex PVC non-reinforced flashing to flash the goose neck.

5. For pipe clusters or unusually shaped penetrations, a Molded Sealant Pocket must be utilized.

6. Hot pipes which exceed 140°F (60°C) (PVC/KEE HP) or 160°F (71°C) (TPO) must be insulated with metal collars and rain hoods and flashed in accordance with appropriate Versico Detail.

7. Applicable Versico details shall be utilized. For VersiFleece Fully Adhered Roofing Systems, additional membrane securement around pipes or pourable sealer pockets is not required regardless of size.

3.09 Roof Walkways

Walkways are to be specified at all traffic concentration points (i.e., roof hatches, access doors, rooftop ladders, etc.), and if regular maintenance (once a month or more) is necessary to service rooftop equipment. Refer to **Spec Supplement G-05-21 "Roof Walkway Installation"**.

3.10 Daily Seal

On phased roofing, when the completion of flashings and terminations is not possible by the end of each workday, provisions must be taken to temporarily close the membrane to prevent water infiltration. Refer to **Spec Supplement G-06-20 "Daily Seal / Clean Up"**.

Copyright 2024 Versico Roofing Systems
Versico, VersiWeld, VersiFlex, VersiFleece, VersiCore, VersiTrim, DuraFaceR and Flexible DASH Adhesive are Trademarks of Versico
Insulfoam, InsulLam, R-Tech by Insulfoam
Thermapink, Foamular and Durapink are Trademarks of Owens Corning
DensDeck, DensDeck Prime and DensDeck StormX Prime are Trademarks of Georgia-Pacific Corporation
Securock is a Trademark of USG
Styrofoam is a Trademark of Dow Chemical Company
Olybond is a Trademark of OMG, Inc.

This specification represents the applicable information available at the time of its publication. Owners, specifiers and Versico authorized Roofing Contractors should consult Versico or their Versico Independent Sales Representative for any information, which has subsequently been made available.

Review the appropriate Versico warranty for specific warranty coverage, terms, conditions and limitations.

SPECIFICATION
ATTACHMENT

VersiFleece TPO/PVC/KEE HP Fully Adhered Roofing System

"Attachment I"

Direct Application Over Lightweight Insulating Concrete

January 2024

When specified, the VersiWeld VersiFleece TPO or VersiFlex VersiFleece PVC/KEE HP membrane may be fully adhered with Flexible DASH Adhesive directly over a new **approved cellular or perlite lightweight insulating concrete** substrate with a **minimum compressive strength of 225 psi**.

Note: When the use of vermiculite lightweight insulating concrete is specified, Versico must be contacted to determine applicable requirements pertaining to priming, venting and warranty wind speed coverage. Projects where the VersiFleece membrane has been approved over vermiculite will be limited to a wind speed coverage of 55 mph peak gust wind speed unless otherwise approved by Versico.

Note: Except when the lightweight insulating concrete is poured over slotted steel decks, pressure relief vents must be specified at a minimum rate of 1 every 2000 square feet and shall be installed with each completed section, to provide immediate relief and prevent pressure build-up. Direct Application is not permitted where the lightweight concrete is poured over an existing roofing material.

The Authorized Contractor must provide Versico with a copy of a certification letter from the lightweight insulating concrete manufacturer (on new construction projects), which references the project name and location and contains the manufacturer's brand name, minimum compressive strength, average wet and air dry densities.

The substrate must be dry, free of debris, fins, frost, loose and foreign materials. Fill any gaps in the substrate greater than 1/4" with Flexible DASH Adhesive or other appropriate material.

VersiFleece Membrane - Adhesive Attachment – Up to 20 YR Warranty			
Warranty Duration	**Wind Speed Coverage**	**Adhesive Ribbon Spacing**	
		Field	**Perimeter**
15 YR Warranty	55 MPH	12” O.C.	6” O.C.
	72 MPH	6” O.C.	6” O.C.
	80 MPH	FS	FS
20 YR Warranty	55 MPH	6” O.C.	6” O.C.
	72 MPH	6” O.C.	4” O.C.
	80 MPH	FS	FS
FS = Full Spray, Equipment (Rig) Splatter or Ribbons @ 4” O.C.			

Application Cautions

1. Do not proceed with membrane installation until the lightweight insulating concrete has cured a minimum of 48 hours. If necessary, consult with the lightweight insulating concrete manufacturer concerning additional drying time.

2. After rain or other precipitation, follow the manufacturer’s requirements concerning proper visual inspection and additional drying time prior to adhering the membrane.

3. Prior to membrane installation, darker areas, especially along hairline cracks in the concrete, may serve as an indication of moisture entrapment and possible standing water beneath the surface. If this condition is found, consult with the lightweight insulating concrete manufacturer for proper corrective measures.

4. Except when lightweight insulating concrete is poured over slotted steel decks, the roofing contractor must conduct core cuts at the minimum rate of 1 every 2,000 square feet. The core cuts should be located around hairline cracks (if present) where darker areas are visible. After core cuts have been taken, the substrate must be examined for evidence of moisture above the structural deck and, if found, a wet/dry vacuum system, as recommended by the lightweight insulating concrete manufacturer, must be utilized to remove standing water from beneath the surface of the concrete.

   a) To ensure the efficient operation of the vacuum system, a tight seal must be provided between the nozzle of the vacuum and the lightweight concrete substrate.

   b) A one-way pressure relief vent, approved by Versico, must be installed over each core cut in accordance with applicable Versico Details. Contact Versico for approved pressure relief vents.

END OF ATTACHMENT

SPECIFICATION
ATTACHMENT

VersiFleece TPO/PVC/KEE HP Mechanically Attached Roofing System

"Attachment II"

Mechanically Attached Membrane Option

January 2024

General Considerations

A. As an option to fully adhering the VersiFleece Membrane (TPO with polyester reinforcing and PVC/KEE HP with fiberglass reinforcement) with Flexible DASH Adhesive, the membrane may be loose laid and mechanically attached over an approved substrate to an acceptable deck (minimum 22 ga. steel deck or wood decks) using HPVX Fasteners and HPVX Plates as described in Table I & II of this attachment.

B. **Any Versico approved insulation or cover board** included in the Thermoplastic Specification, approved for Mechanically Attached Assemblies, may be used as part of the roofing assembly.

C. The approved insulation/cover board shall be mechanically attached to the roof deck at the minimum rate of **1 fastener and plate per every 8 square feet** (4 fasteners in a 4 x 8 board) for warranties up to 15 year. Projects with 20 year warranties require the use of 6 fasteners and plates in a 4' x 8' board (1 per 5.333 square feet).

CAUTION: **Versico Polyisocyanurate Insulation with a thickness less than 1.5" installed over an existing roofing membrane without a tear-off** must be mechanically attached to the roof deck with a minimum of **1 fastener and plate for every 4 square feet** or less of insulation. Refer to Thermoplastic Mechanically Attached Specification for Specific Cautions, Warnings and other membrane/insulation fastening options.

D. Use of DensDeck, DensDeck Prime and DensDeck StormX Prime should be limited to assemblies with slopes greater than 2" per foot to ensure compliance with external fire codes, care shall be exercised to ensure polymer plates are fully seated. DensDeck, DensDeck Prime and DensDeck StormX Prime are not approved in re-roofing applications for use directly over existing roofing membranes. Not for use directly over lightweight insulating concrete substrates in either new construction or re-roofing applications/tear-off.

Submittals

A. In addition to the Submittal requirements outlined in Paragraph 1.04 of the main specification, for mechanically attached systems shop drawings must include:

1. Sheet width and number of perimeter sheets
2. Versico Fastener type, length and maximum spacing (for membrane securement).

B. **Along with project submittals** (shop drawing and Request for Warranty), the roofing contractor must include **pullout test** results when the results are below the requirements identified in the Table included in **Design Reference DR-06-19 "Withdrawal Resistance Criteria"**.

Warranty

A. Projects meeting the conditions below can be eligible for a maximum 15 year System Warranty with wind speed coverage up to 72 mph peak gusts. Projects requiring extended wind speed coverage or a 20-year System warranty must be submitted to Versico for review prior to installation.

Table I VersiFleece TPO/PVC/KEE HP Membrane Fastening Criteria for Mechanically Attached Roofing Systems 22 GA. Steel Deck Only							
Peak Gust Wind Speed Warranty	Membrane Type	Max. Building Height	Min. Number of Perimeter Sheets / Building Distance from Coastline: Greater than 7 miles	Min. Number of Perimeter Sheets / Building Distance from Coastline: Less than or equal to 7 miles	Field Membrane Width	Perimeter Sheet Width	*Fastening Density (Field & Perimeter Sheets)
55 MPH	TPO	Up to 50'	1	2	12'	6'	12" O.C.
	PVC	Up to 40'	1	2	10'	5'	
72 MPH	TPO	Up to 50'	2	2	12'	6'	12" O.C.
	PVC	Up to 40'	2	2	10'	5'	

*TPO or PVC or KEE HP PVC using HPVX Fasteners and HPVX Plates.

Table II VersiFleece TPO/PVC/KEE HP Membrane Fastening Criteria for Mechanically Attached Roofing Systems Wood Decks								
Peak Gust Wind Speed Warranty	Deck Type	Projected Pull-Out Values	Membrane Type	Min. Number of Perimeter Sheets / Building Distance from Coastline: Greater than 7 miles	Min. Number of Perimeter Sheets / Building Distance from Coastline: Less than or equal to 7 miles	Field Membrane Width	Perimeter Sheet Width	Fastening Density (Field & Perimeter Sheets)
55 MPH	7/16" OSB* or 15/32" 3-Ply Plywood or 5/8" OSB	210 lbs* (OSB) or 240 lbs (3-Ply) or 310lbs (OSB)	TPO	2	3	12'	6'	12" O.C.*
			PVC	2	3	10'	5'	
	15/32" 5-Ply Plywood	530 lbs	TPO	1	2	12'	6'	12" O.C.
			PVC	1	2	10'	5'	
72 MPH	15/32" 5-Ply Plywood	530 lbs	TPO	2	3	12'	6'	12" O.C.
			PVC	2	3	10'	5'	

*Fastening Density for Field and Perimeter Sheets is 9" o.c. when fastening to 7/16" OSB with minimum pullout of 210lbs.

Roof Deck and Substrate Criteria

A. The following table identifies the acceptable roof decks/substrates and the minimum underlayment requirements:

Roof Deck & Substrate Criteria for Mechanically Attached Roofing Systems

Acceptable Roof Deck/Substrate	VersiFleece EPDM Membrane	VersiFleece TPO Membrane	VersiFleece FRS PVC Membrane	VersiFleece KEE HP Membrane
NEW CONSTRUCTION				
Steel (min. 22 gauge)(1)(2)	Insulation	Insulation	Insulation	Insulation
Plywood (min. 15/32" thick) or Oriented Strand Board (min. 7/16" thick)	Direct Application	Direct Application	Direct Application	Direct Application
Wood Planks (minimum 3/4" thick)	Direct Application	Direct Application	Direct Application	Direct Application
Lightweight Insulating Concrete	Direct Application	Direct Application	Direct Application	Direct Application
RETROFIT / NO TEAR-OFF				
Existing Smooth Surface BUR (7) or Mineral Surface Cap Sheet	Direct Application (10)(11)	Direct Application (11)	Direct Application (8)(9)	Direct Application (9)(11)
Gravel Surfaced BUR (3)(4)	Insulation	Insulation	Insulation	Insulation
Coal Tar Pitch (4)	Insulation (4)	Insulation (4)	Insulation (4)	Insulation (4)
Modified Bitumen (6)	Direct Application	Direct Application (6)	Direct Application	Direct Application
Existing Single-Ply	Direct Application (5)	Direct Application (5)	Direct Application (5)	Direct Application (5)
RETROFIT / TEAR-OFF				
Existing roof material removed (steel or wood decks)	Insulation	Insulation	Insulation	Insulation

Notes:

(1) Local codes must be consulted regarding thermal barrier requirements.
(2) Mechanically Attached Systems cannot be specified on steel decks less than 22 gauge or for corrugated steel decks, regardless of gauge.
(3) Loose gravel must be removed to avoid moisture entrapment.
(4) Existing coal tar could drip back into the building, especially when new insulation does not provide sufficient thermal value to prevent the surface of the coal tar from softening.
(5) An approved Insulation / Underlayment is required over existing ballasted single-ply systems and PVC roofing systems of any type.
(6) Direct application permitted over smooth surfaced modified bitumen. Membrane shall be positioned with length of sheets parallel to modified bitumen field seams. At end laps or other locations where splices intersect modified bitumen field seams. Refer to VersiFleece specification and applicable Versico Details.
(7) Existing Type III or IV smooth asphalt BUR only.
(8) Possible staining/discoloration of the white membrane may result when installing this system directly over existing smooth surfaced BUR or modified bitumen, especially along the selvage edge where fleece backing is not present. If aesthetics are critical, an approved insulation should be specified beneath the membrane.
(9) Direct application for VersiFleece KEE HP Only. VersiFleece PVC requires insulation.
(10) Mechanically Fastened Systems (VersiGard (black) may be applied directly to the substrate providing asphalt on existing smooth surfaced built-up roof has a softening point above 185°F (85°C).
(11)) Existing Type III or IV smooth asphalt BUR Only.

This page intentionally blank

SPECIFICATION
ATTACHMENT

VersiFleece FR TPO
Mechanically Attached Roofing System

"Attachment III"

January 2024

General Considerations

A. A UL Class A roof assembly can be achieved without the use of a coverboard over combustible decks by utilizing the VersiFleece FR TPO, 115-mil white, membrane, available in 5’ or 10’ wide by 50’ or 100’ long. This roof assembly is loose laid and mechanically fastened over a combustible deck with Versico HPVX Fasteners and HPVX Plates positioned along the centerline of the 10'-wide sheets as follows:

1. Adjoining sheets of VersiFleece FR TPO are overlapped approximately 5½" along the length of the membrane (at the selvage edge) where fastening plates will be located.

   Note: To qualify for Versico’s 2" hail coverage warranty, adjoin the two VersiFleece FR TPO sheets by overlapping approximately 9" to ensure the fastening plates are covered by the FR fleece. The fleece portion of the membrane must extend a minimum of 3/4" past the edge of the plate.

2. At end laps (along the width of the sheet), membranes shall be butted together which will be overlaid with minimum 6"-wide VersiWeld reinforced membrane hot-air welded on all edges. Cut edges of TPO membrane shall be sealed with TPO cut edge sealant.

B. The membrane shall be secured around the building perimeter using either 5’ wide sheets of VersiFleece FR TPO or additional rows of HPVX Fasteners and HPVX Plates positioned along the centerline of the 10'-wide sheets as follows:

1. VersiWeld Pressure-Sensitive Cover strip (in conjunction with TPO Primer) or a minimum 6"-wide VersiWeld Reinforced membrane (hot-air welded) used to overlay the fasteners and plates. Cut edges of TPO membrane shall be sealed with TPO cut edge sealant.

2. **Note:** Projects, where a 20-year Warranty is specified, must utilize a minimum 6”-wide VersiWeld Reinforced membrane (hot-air welded) used to overlay the fasteners and plates.

Submittals

A. In addition to the Submittal requirements outlined in Paragraph 1.04 of the main specification, for mechanically fastened systems shop drawings must include the number of perimeter sheets.

B. **Along with project submittals** (shop drawing and Request for Warranty), the roofing contractor must include **pullout test** results when the results are below the requirements identified in Table I.

Warranty

Projects meeting the conditions outlined in Table I can be eligible for a maximum 20 year System Warranty with wind speed coverage up to 72 mph peak gusts. Projects requiring extended wind speed coverage must be submitted to Versico for review prior to installation.

Table I	VersiFleece FR TPO Membrane Fastening Criteria for Wood Decks							
Peak Gust Wind Speed Warranty	Deck Type	Projected Pull-Out Values	Membrane Type	Min. Number of Perimeter Sheets		Field Membrane Width	Perimeter Sheet Width	Fastening Density (Field & Perimeter Sheets)
				Building Distance from Coastline				
				Greater than 7 miles	Less than or equal to 7 miles			
55 MPH	7/16" OSB* or 15/32" 3-Ply Plywood or 5/8" OSB	210 lbs* (OSB) or 240 lbs (3-Ply) or 310lbs (OSB)	**FR TPO**	2	3	10'	5'	12" O.C. *
	15/32" 5-Ply Plywood	530 lbs	**FR TPO**	1	2	10'	5'	12" O.C.
72 MPH	15/32" 5-Ply Plywood	530 lbs	**FR TPO**	2	3	10'	5'	12" O.C.

*Fastening Density for Field and Perimeter Sheets is 9" o.c. when fastening to 7/16" OSB with minimum pullout of 210lbs.

Roof Deck and Substrate Criteria

The following table identifies the acceptable roof decks/substrates and the minimum underlayment requirements:

Roof Deck & Substrate Criteria for Mechanically Fastened Roofing Systems

Acceptable Roof Deck/Substrate	VersiFleece FR TPO Membrane
NEW CONSTRUCTION	
Plywood (min. 15/32" thick) or Oriented Strand Board (min. 7/16" thick)	Direct Application
Wood Planks (minimum 3/4" thick)	Direct Application
RETROFIT / TEAR-OFF	
Existing roof material removed (wood decks)	Direct Application with some limitations*

* For direct application over an acceptable roof deck/substrate, the substrate must be smooth, free of debris, protrusions, sharp edges and loose and foreign material. Cracks or voids in the substrate, greater than 1/4", must be filled with an appropriate material. Protruding nails or screws shall be removed and replaced with threaded screw-type fasteners.

Associated Installation Details

Direct Application Over Wood Deck VFFR-2.1
Cricket or Saddle Covered with Standard TYPO Membrane VFFR-2.2
Roof Drain for VersiFleece FR TPO Membrane VFFR-6.1
VersiFleece FR TPO – Insert Drain Through Deck VFFR-6.2

END OF ATTACHMENT

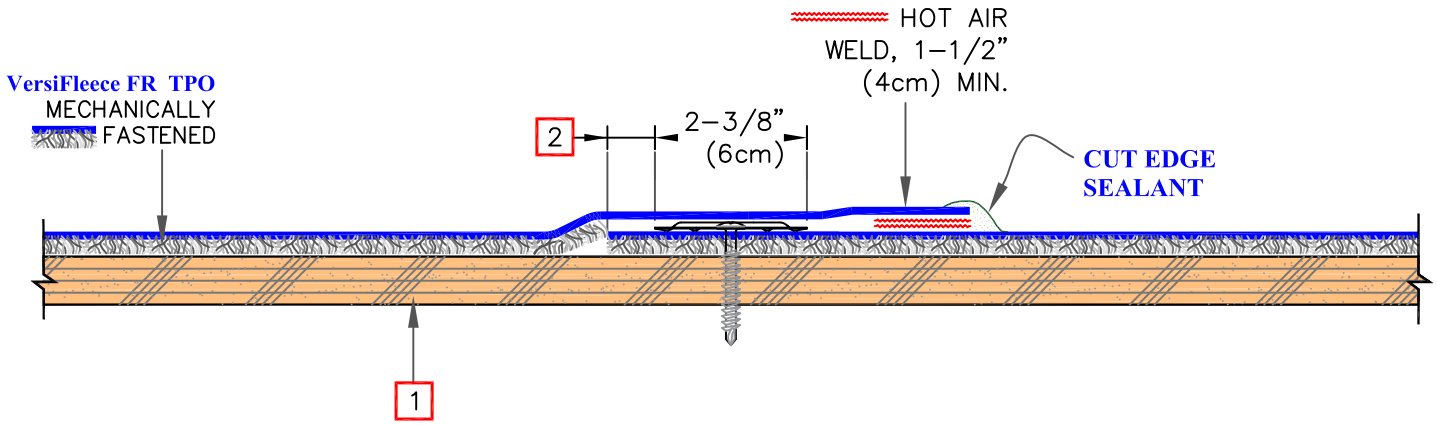

DETAIL A (TYPICAL SEAM)

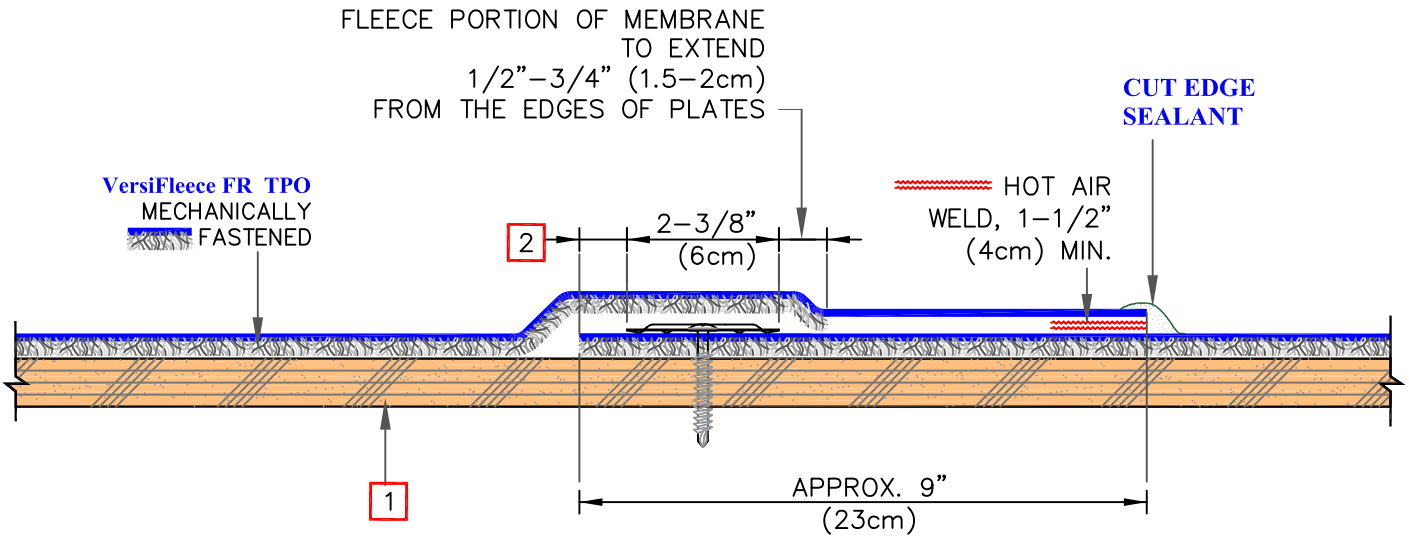

DETAIL B (SEAM FOR OBTAINING HAIL WARRANTY COVERAGE)

NOTES:

1. COMBUSTIBLE DECK, MAX. SLOPE 1/4" PER FOOT – PLYWOOD SHOWN. ON EXISTING DECKS, REMOVE PROTRUDING NAILS/FASTENERS AND REPLACE WITH NEW THREADED FASTENERS.
2. PLATE EDGES 1/2"–3/4" (1.5–2cm) FROM THE EDGE OF MEMBRANE.

© 2024 VERSICO

DIRECT APPLICATION OVER WOOD DECK

→ VERSIFLEECE FR TPO MEMBRANE
→ APPROVED ADHESIVE
→ APPROVED SUBSTRATE
0 → SEE NOTE(S)

FR (FIRE RATED)

VFFR–2.1

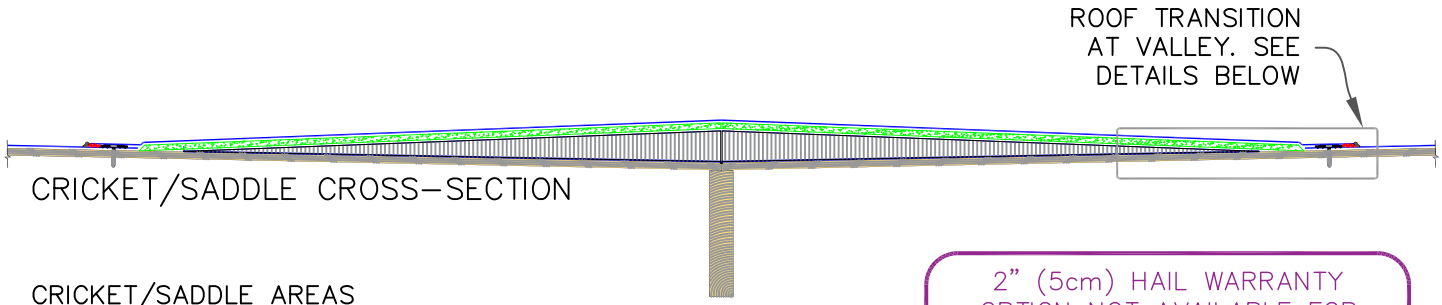

2" (5cm) HAIL WARRANTY OPTION NOT AVAILABLE FOR AREAS USING NON-FLEECE MEMBRANE.

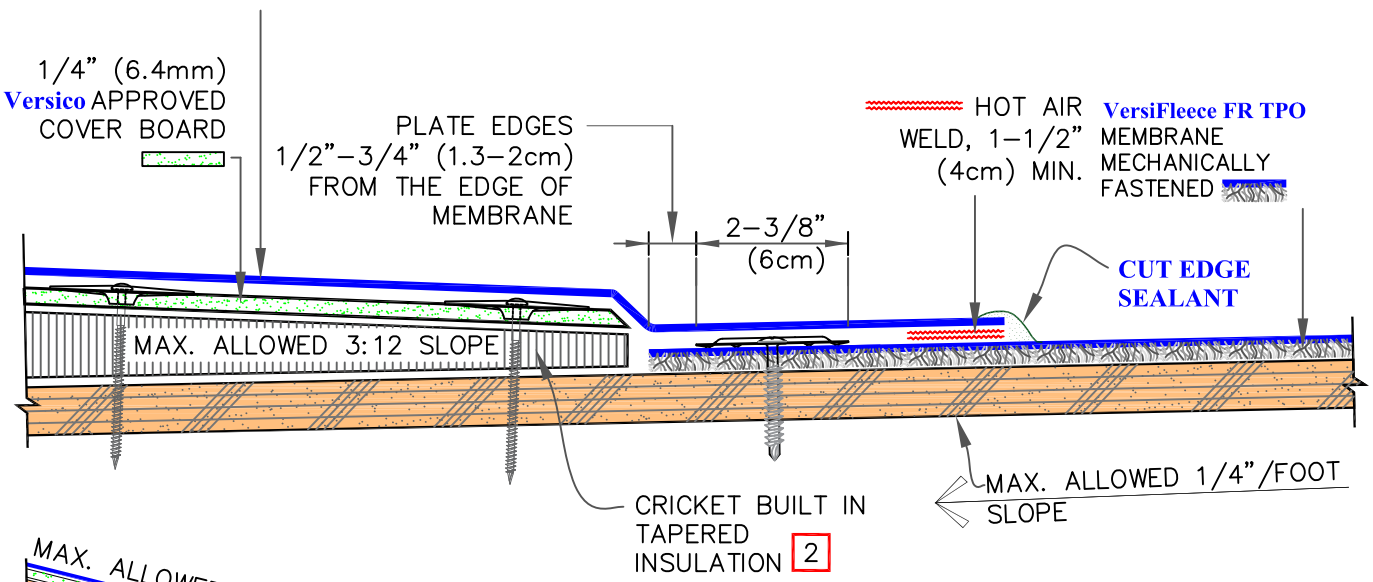

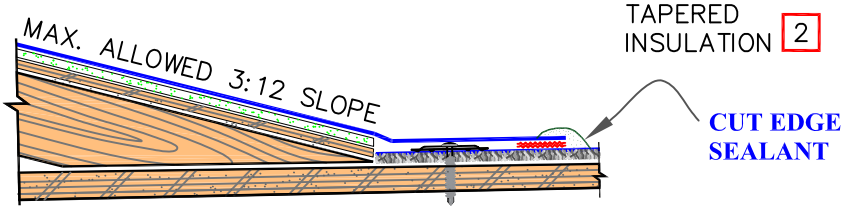

CRICKET BUILT IN WOOD CARPENTRY

1/4"/FOOT	1.2°	1 METER : 2Cm	2%
3" : 12"	14°	1 METER : 25Cm	25%

NOTES:

1. SEE INSET A TO FURTHER ENHANCE THE FIRE PROTECTION, (OPTIONAL).
2. POLYISOCYANURATE OR EXPANDED POLYSTYRENE BOARDS. SEE GRAPHIC EXAMPLE BELOW FOR SLOPE RATIO.

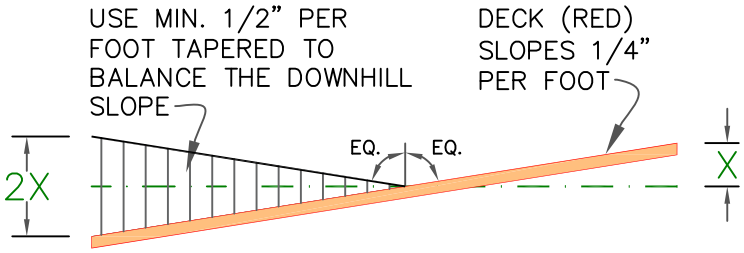

INSET A

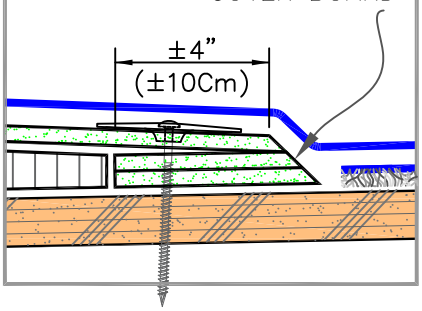

VERSICO ROOFING SYSTEMS
© 2024 VERSICO

CRICKET OR SADDLE COVERED WITH STANDARD TPO MEMBRANE

→ VERSIFLEECE FR TPO MEMBRANE
→ APPROVED ADHESIVE
→ APPROVED SUBSTRATE
0 → SEE NOTE(S)

FR (FIRE RATED)

VFFR-2.2

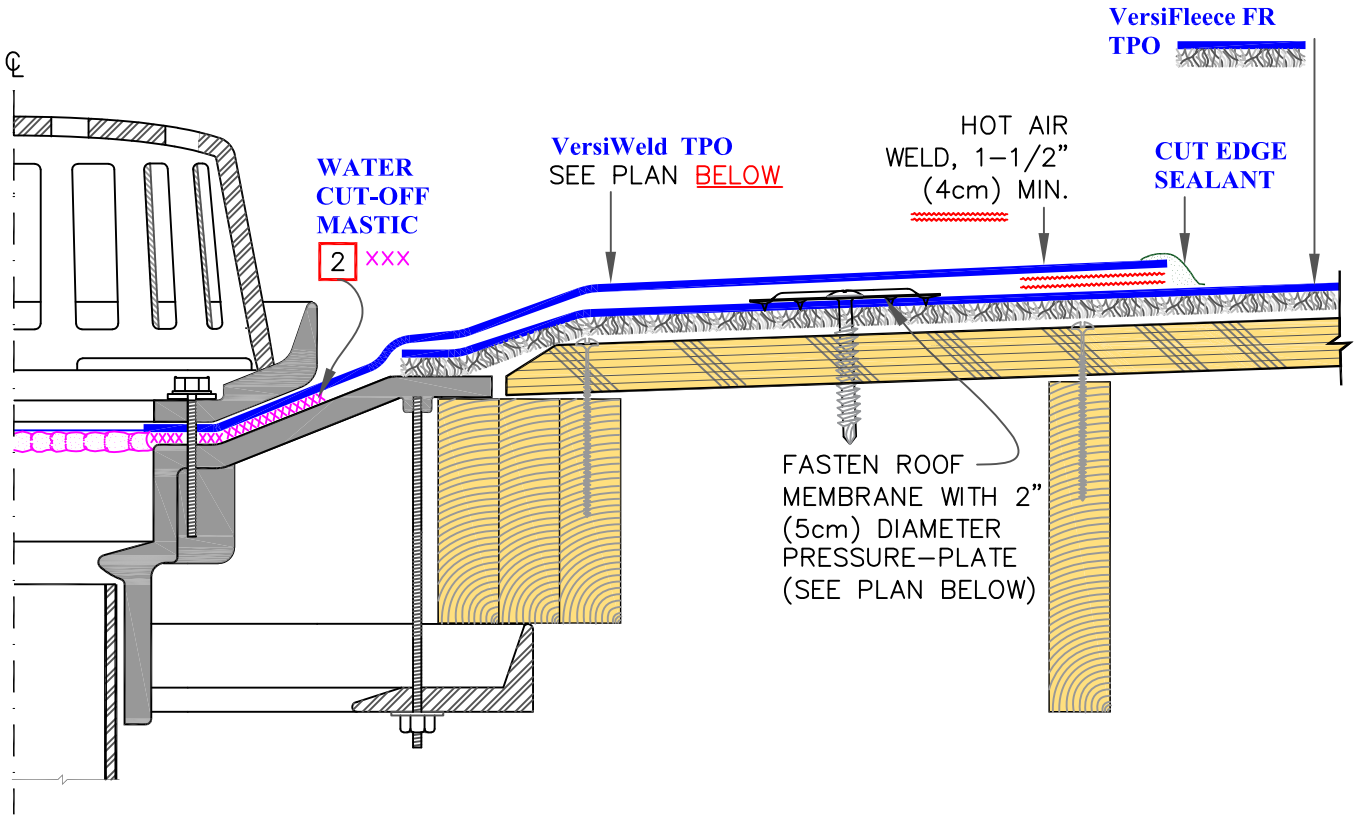

NOTES:

1. ROOF DRAIN SIZE AND NUMBER OF DRAINS SHALL BE IN ACCORDANCE WITH THE LOCAL CODES.

2. ALL BOLTS OR CLAMPS MUST BE IN PLACE TO PROVIDE CONSTANT COMPRESSION ON WATER CUT–OFF MASTIC.

3. THE HOLE IN THE MEMBRANE SHALL EXCEED THE DIAMETER OF THE DRAIN PIPE, BUT SHALL BE NO LESS THAN 1/2" (1.5cm) FROM THE ATTACHMENT POINTS OF THE DRAIN CLAMPING RING.

4. APPROXIMATELY 1/8" (3mm) DIAMETER BEAD OF CUT–EDGE SEALANT IS REQUIRED ON CUT EDGES O REINFORCED TPO MEMBRANE.

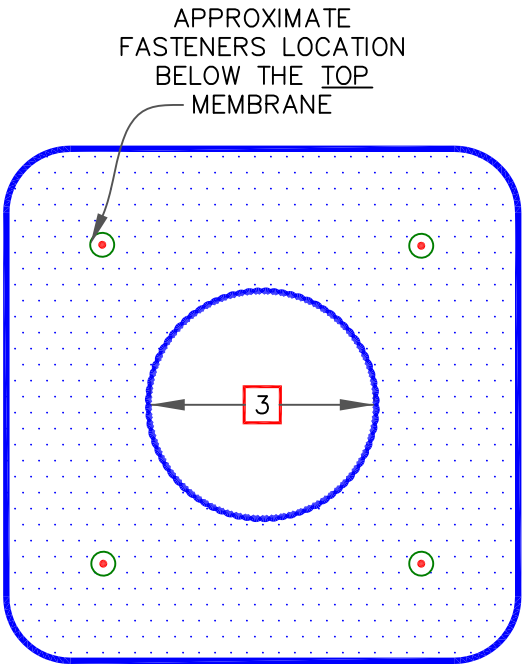

36"X36" (91X91cm) VersiWeld TPO
WITH ROUNDED CORNERS

VERSICO ROOFING SYSTEMS
© 2024 VERSICO

ROOF DRAIN FOR
VersiFleece FR TPO
MEMBRANE

→ VERSIFLEECE FR TPO MEMBRANE
→ APPROVED ADHESIVE
→ APPROVED SUBSTRATE
0 → SEE NOTE(S)

FR (FIRE RATED)

VFFR–6.1

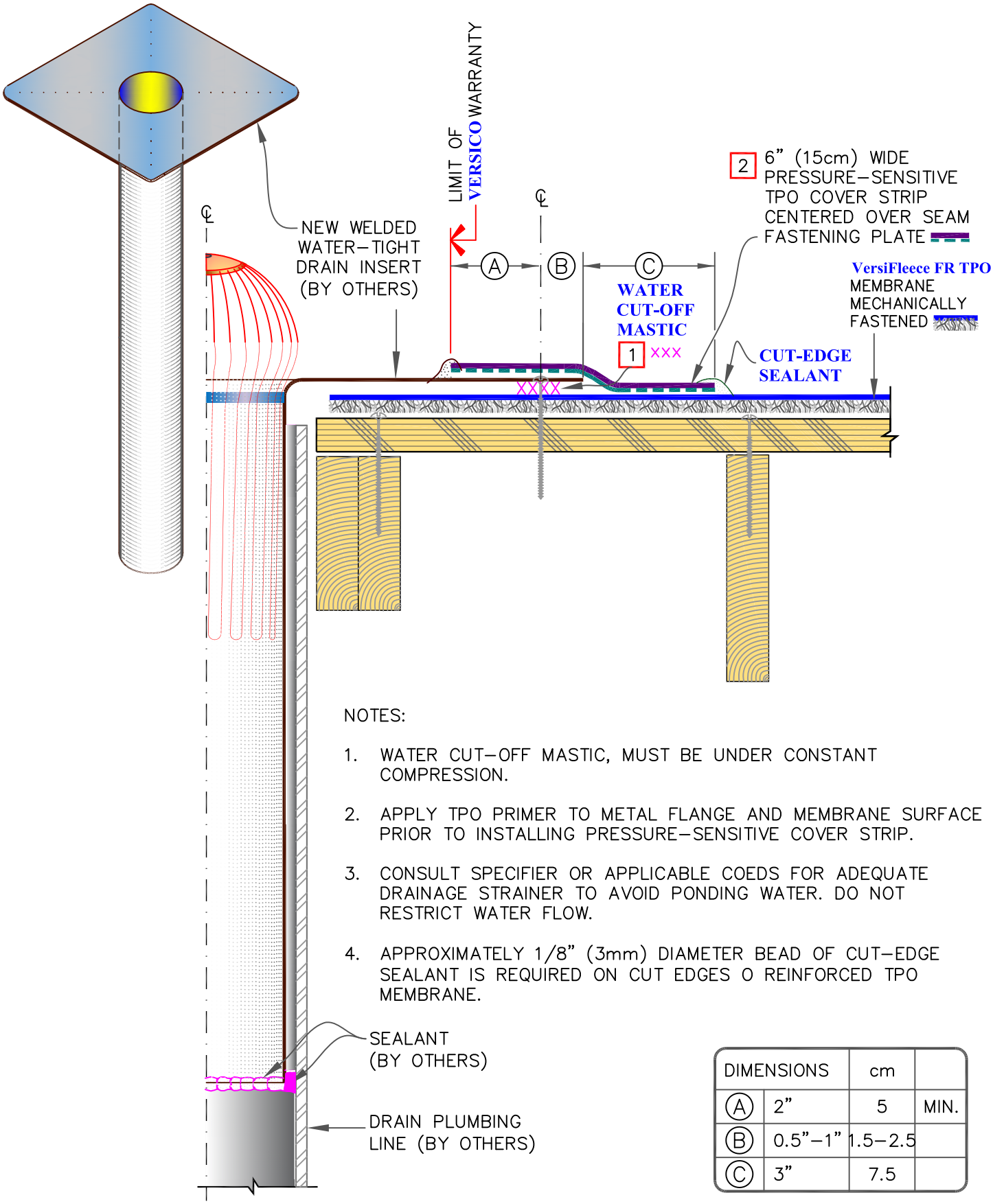

NOTES:

1. WATER CUT-OFF MASTIC, MUST BE UNDER CONSTANT COMPRESSION.
2. APPLY TPO PRIMER TO METAL FLANGE AND MEMBRANE SURFACE PRIOR TO INSTALLING PRESSURE-SENSITIVE COVER STRIP.
3. CONSULT SPECIFIER OR APPLICABLE COEDS FOR ADEQUATE DRAINAGE STRAINER TO AVOID PONDING WATER. DO NOT RESTRICT WATER FLOW.
4. APPROXIMATELY 1/8" (3mm) DIAMETER BEAD OF CUT-EDGE SEALANT IS REQUIRED ON CUT EDGES O REINFORCED TPO MEMBRANE.

DIMENSIONS		cm	
A	2"	5	MIN.
B	0.5"–1"	1.5–2.5	
C	3"	7.5	

VERSICO ROOFING SYSTEMS

© 2024 VERSICO

VersiFleece FR – INSERT DRAIN THROUGH DECK

→ VERSIFLEECE FR TPO MEMBRANE
→ APPROVED ADHESIVE
→ APPROVED SUBSTRATE
0 → SEE NOTE(S)

FR (FIRE RATED)

VFFR–6.2

SPECIFICATION
ATTACHMENT

VersiFleece RL EPDM/TPO/PVC/KEE HP RapidLock Roofing System

"Attachment IV"

January 2024

General Considerations

This system utilizes VersiFleece RL EPDM, TPO or PVC membrane attached with Velcro® Brand Securable Solutions to either VersiCore RL Polyiso, SecurShield RL Polyiso or SecurShield HD RL Cover Board resulting in a fully adhered membrane without the use of adhesives. Available in 115-mil thick EPDM (black) or TPO (white, gray or tan) or PVC (white) in 10’ wide by 50’ or 100’ length rolls. The VersiFleece RL EPDM membrane is manufactured with 3” Factory-Applied Tape. VersiFleece RL EPDM, TPO and PVC membranes have a factory-applied release liner to aid in installation. The VersiFleece RL TPO 115-mil membrane is available with APEEL Protective film in white, tan or gray and 10’ wide by 100’ long rolls.

Warranty

Projects meeting the conditions below can be eligible for a maximum 20 year Membrane System Warranty with wind speed coverage up to 90 mph peak gusts. Projects requiring extended wind speed coverage warranty must be submitted to Versico for review prior to installation.

NOTE: See Tables Below for information regarding Warranted Systems and Design Criteria.

Table I **VersiFleece RL Adhered Systems Warranty Options**

Years	Minimum Membrane Thickness	Warranty Wind Speed			Additional Hail Coverage(4)		
		55, 72 or 80 mph	90 or 100 mph	110 or 120 mph	1" Dia. Hail	2" Dia. Hail	3" Dia. Hail
5,10, or 15 year	VersiFleece RL EPDM 115-mil (1) or VersiFleece RL TPO 115-mil or VersiFleece RL PVC 115-mil	√	√	√	√	√	N/A
20 year	VersiFleece RL EPDM 115-mil (1) or VersiFleece RL TPO 115-mil or VersiFleece RL PVC 115-mil	√	√	√	√	√	N/A
25 year	VersiFleece RL EPDM 115-mil (2)	√	√	√	√	√	√
	VersiFleece RL EPDM 145-mil (2)	√	√	√	√	√	√
	VersiFleece RL TPO 135-mil	√	√	√	√	√	√
	VersiFleece RL PVC 135-mil	√	√	√	√	√	√
30 year	VersiFleece RL EPDM 145-mil (2)	√	√	√	√	√	√
	VersiFleece RL PVC 135-mil	√	√	√	√	√	√
	VersiFleece RL TPO 135-mil	√	√	√	√	√	√

Notes: N/A = Not Acceptable √= Acceptable

(1) Using 3” Factory-Applied Tape (FAT)
(2) Using 6” Factory-Applied Tape (FAT)

Table II Underlayment/Insulation & Required Attachment Assemblies Up to 20 YR Warranty

Other Requirements are Listed in Additional Design Considerations following this Table
All Versico Products listed for higher wind speed coverage can also be used for Warranties with lesser speed coverage.
(i.e. 72 MPH underlayment may be used for 55 MPH underlayment)

Peak Gust Wind Speed Warranty	Minimum Membrane Underlayment (Versico Supplied Only)	Insulation/Underlayment Attachment			Metal Edging
		# of Fasteners per 4' x 8' board size (1)	Adhesive Ribbon Spacing for 4' x 4' and 4' x 8' size board (9)		
			Field	Perimeter	
55 or 72 MPH	1/2 SecurShield HD RL (2)	12	6" (4)	6" (4)	Versico Drip Edge, SecurEdge™ 200 or 300
	2" VersiCore RL	8			
	2.6" VersiCore RL				
	2" SecurShield Polyiso RL				
	2.6" SecurShield Polyiso RL				
80 MPH	1/2 SecurShield HD RL (2)	16	6" (4)	6" (4)	Versico Drip Edge, SecurEdge 200 or 300 (8)
	2" SecurShield Polyiso RL	8			
	2.6" SecurShield Polyiso RL				
90 MPH	1/2" SecurShield HD RL (2)	16	6" (7)	6" (7)	Versico Drip Edge (3), SecurEdge 2000 or 3000.
	2" SecurShield Polyiso RL	8			
	2.6" SecurShield Polyiso RL				
100 MPH	2" SecurShield Polyiso RL	16	FS	FS	Versico Drip Edge (3), SecurEdge 2000 or 3000.
	2.6" SecurShield Polyiso RL				
110 or 120 MPH	1/2" SecurShield HD RL (2)	Not Acceptable	FS	FS	SecurEdge 2000 or 3000

FS = Full Spray, Equipment (Rig) Splatter or Ribbons @ 4" O.C.
(1) For Building heights between 51-100', enhance 12'-wide perimeter with 50% more fasteners and plates. Cannot exceed 24 fasteners per board.
(2) Cover boards must be installed over a min. 1" thick approved Versico Insulation.
(3) Versico HP or HP-X Fasteners must be used to secure Versico Drip Edge or SecurEdge 200 Metal Fascia to perimeter wood nailers.
(4) Gravel Surface BUR - Field @ 6" O.C. / Perimeter @ 4" O.C
(5) Steel Decks - Field & Perimeter @ 6" O.C.
(6) Smooth BUR - Field @ 6" O.C. / Perimeter @ 4" O.C
(7) Gravel Surface BUR – FS
(8) May be fastened with ring shank nails staggered 4" on center. Versico HP or HP-X™ Fasteners may also be used fastened 12" on center.
(9) Maximum 4' x 4' insulation boards when the adhesive is extruded at 12" o.c. or when boards exceed 4" thickness. 4' x 8' insulation boards may be used when the adhesive is applied at Full-Spray, Equipment (Rig) Splatter, 4", or 6" beads).

Additional Design Considerations (Up to 20 YR Warranty)

(Required in conjunction with Table II)

A - Building height shall not exceed 100 foot*
B - Local Wind Zone per ASCE 7 shall not exceed 130 mph*
C - Acceptable decking: 22-gauge or heavier steel, structural concrete, 1-1/2" wood plank, or 15/32" plywood.
D - All "T-joints" must be overlaid with appropriate flashing material
* For projects where building height exceeds 100' or wind speed exceeds 130 mph, please submit to Versico for review.

Table III Underlayment/Insulation & Required Attachment Assemblies 25 YR or 30 YR Warranty

Other Requirements are Listed in Additional Design Considerations following this Table.
All Versico Products listed for higher wind speed coverage can also be used for Warranties for a lower speed coverage.
(i.e. 72 MPH underlayment may be used for 55 MPH underlayment)

Peak Gust Wind Speed Warranty	Minimum Membrane Underlayment	Insulation Attachment			Metal Edging
		# of Fasteners per 4' x 8' board size (1)	Adhesive Ribbon Spacing for 4' x 8' size board		
			Field	Perimeter	
55 or 72 MPH	2" SecurShield Polyiso RL	20	6" (3)	6"	Versico Drip Edge, SecurEdge 200 or 300 (5)
	2.6" SecurShield Polyiso RL				
	1/2" SecurShield HD RL (1) (2)(7)	16			
80 MPH	2" SecurShield Polyiso RL	20	6"	6"	Versico Drip Edge (4), SecurEdge 200 or 300(4) or SecurEdge 2000 or 3000.
	2.6" SecurShield Polyiso RL				
	1/2" SecurShield HD RL (2)(7)				
90 MPH	1/2" SecurShield HD RL (1) (2)(7)	24	FS	FS	SecurEdge 2000 or 3000
100 or 120 MPH	1/2" SecurShield HD RL (2)	Not Acceptable	FS	FS	SecurEdge 2000 or 3000

FS = Full Spray, Equipment (Rig) Splatter or Ribbons @ 4" O.C.
(1) For Building heights between 51-100', enhance 12'-wide perimeter with 50% more fasteners and plates. Cannot exceed 24 fasteners per board.
(2) Hail coverage offered with substrate.
(3) Structural Concrete - Field @ 12" O.C. / Perimeter @ 6" O.C.
(4) 80-mph over structural concrete - Field & Perimeter @ 6" O.C.
(5) May be fastened with ring shank nails staggered 4" on center. Versico HP or HP-X Fasteners may also be used fastened 12" on center.
(6) Gravel Surface BUR – Field @ 6" O.C. / Perimeter @ 4" O.C.
(7) 1/2" SecurShield HD limited to 90 mph.

Additional Design Considerations (25 YR or 30 YR Warranty)

(Required in conjunction with Table III)

A - Minimum membrane thickness of 145-mil FleeceBACK RL EPDM, 135-mil FleeceBACK RLTPO or RL PVC, Maximum 25-year warranty for FleeceBACK RL PVC
B - Building height shall not exceed 100 foot *
C - 1/4" per horizontal foot slope is preferred; however, 1/8" slope with sufficient number of drains and crickets / saddles may be accepted.
D - Local Wind Zone per ASCE 7 shall not exceed 130 mph*
E - Acceptable decking: 22-gauge or heavier steel, structural concrete, 1-1/2" wood plank, or 15/32" plywood.
F - All "T-joints" must be overlaid with appropriate flashing material.
G - Two layers of insulation with staggered joints, bottom layer must be a minimum 1-1/2" (20-psi) Polyisocyanurate.
H - New construction or complete tear-off of existing roofing material.
*For projects where building height exceeds 100" or wind speeds exceeds 100 mph, please submit to Versico for review.

Table IV Minimum Perimeter Width For Adhered Insulation Attachment

Width of Perimeter	Building Height
4 feet	25 feet
8 feet	26 to 50 feet
12 feet	51 to 75 feet
16 feet	76 to 100 feet
24 feet	Greater than 100 feet

Note: This Table is for reference for Versico System Warranties and does not replace FM requirements for FM insured projects.

Insulation/Underlayments

A. Versico VersiCore RL (RapidLock) Polyisocyanurate – A foam core insulation board covered on both sides with a glass fiber-reinforced felt facer (GRF) meeting ASTM C 1289, Type II, Class 1, Grade 2 (20 psi). The product is available in 4' x 8' standard size with a thickness of 2.0 inch and 2.6 inch. VersiCore RL has an additional "hook" facer to be used with the "loop" fleece of the VersiFleece RL membrane.

B. Versico SecurShield RL (RapidLock) Polyisocyanurate – A foam core insulation board covered on both sides with a premium coated glass facer (CGF) meeting ASTM C 1289, Type II, Class 2, Grade 2 (20 psi). The product is available in 4' x 8' standard size with a thickness of 2.0 inch and 2.6 inch. SecurShield RL has an additional "hook" facer to be used with the "loop" fleece of the VersiFleece RL membrane.

C. Versico SecurShield HD RL Cover Board– a rigid insulation panel composed of a high-density, closed-cell polyisocyanurate foam core laminated to moisture resistant coated-glass fiber-mat facer for use as a cover board or recover board meeting ASTM 1289, Type II, Class 4, Grade 1 (80 psi). Available 1/2" thick 4' x 8' panel weight 11 lbs with an R-value of 2.5. SecurShield HD RL has an additional "hook" facer to be used with the "loop" fleece of the VersiFleece RL membrane.

D. Versico SecurShield HD Composite RL Polyiso – a rigid roof insulation panel composed of a top layer of high-density, closed cell foam, and a bottom layer of 20 psi closed cell foam. Both layers are laminated to a coated glass facer. SecurShield HD Composite RL has an additional "hook" facer to be used with the "loop" fleece of the FleeceBACK RL membrane; May be used as a cover board in compliance with ASTM C1289 Type II, Class 4, Grade 1 (109 psi max.) or as base insulation meeting ASTM C1289 Type II, Class 2, Grade 2 (20 psi). The product is available in 47.5" x 95.5" (1206 mm x 2425 mm) and 47.5" x 47.5" (1206 mm x 1206 mm) in 2" to 2.5" thickness in .5" increments.

Insulation Installation

A. Insulation Attachment (Mechanically Fastened) –
RapidLock insulation is mechanically fastened to the roof deck per Paragraph 3.04 of this VersiFleece specification.

B. Insulation Attachment (Adhered) –
RapidLock insulation is adhered with Flexible DASH Adhesive to the roof deck. When adhering insulation with Flexible DASH, the adhesive is spray-applied or extruded onto the substrate and allowed to rise and foam. Once the adhesive develops string/body/gel (approximately 2 minutes depending on climate), place insulation into the adhesive and walk board into place. Roll the insulation with 30" wide, 150-pound weighted segmented steel roller to ensure full embedment.

NOTE: Assemblies with multiple layers of insulation may incorporate both methods by fastening the bottom layer(s) and adhering the top layer.

Membrane Installation

A. Membrane Attachment –
Prior to membrane placement, the surface of the RapidLock insulation must be cleaned of dust and other foreign

matter using a fine push broom or a blower.

B. Option 1

1. Remove the RapidLock fleece release film on one half of the sheet starting from the split in the liner at the middle of the sheet. The liner should be removed at an angle to reduce splitting or tearing.
2. Roll the membrane onto the substrate at an angle while avoiding wrinkles. When applying the VersiFleece RL EPDM, TPO, or PVC membrane, it is recommended to maintain a large curve (radius) on the leading edge of the membrane. This will help eliminate creases and bubbles that cannot be removed after the sheet is in place.
3. Broom the sheet and then roll the membrane in place starting using a 30” wide, 150-pound weighted segmented steel roller from the middle of the 10'-0” wide sheet and working towards the outer edge.
4. Fold back the remaining half of the sheet and repeat the above process.

C. Option 2

1. Pull both release liners off simultaneously from underneath the membrane at a low angle.
2. Broom the sheet and then roll the membrane in place starting using a 150-lb weighted segmented steel roller from the middle of the 10'-0” wide sheet and working towards the outer edge.

D. Membrane Splicing – VersiFleece RL EPDM

1. To complete seams between two adjoining membrane panels, apply primer to the splice area in conjunction with Versico’s Quick Applied Seam Tape.
2. Strip-in end laps with 6" Quick Applied Overlayment Strip or Quick Applied Cured Cover Strip.
3. Roller-apply V-150 Primer or Low-VOC EPDM Primer to the splice area of the bottom sheet with a short-nap-length paint roller. The primed area shall be free of globs and puddles. Allow primer to dry until it does not transfer to a dry finger.
4. Allow the taped edge of the top sheet to fall freely onto the primed sheet below.
5. Pull the poly backing from the Quick Applied Seam Tape beneath the top sheet and allow the top sheet to fall freely onto the exposed primed surface.
6. Press top sheet onto bottom sheet using firm, even hand pressure across the splice and toward the splice edge.
7. Immediately roll the splice with a 2"-wide (50 mm) steel roller or Versico’s Stand-Up Seam Roller, using positive pressure. Roll across the splice edge when using a 2" roller, not parallel to it. When using the Stand-Up Seam Roller, roll parallel to direction of the splice.
8. For cold-weather splicing below 40°F (4°C), these steps must be followed:

    a. Heat the primed area of the bottom membrane with a hot-air gun as the top sheet with Factory-Applied Tape is applied and pressed into place.

    b. Prior to rolling the splice area with a 2"-wide steel hand roller, apply heat to the top side of the membrane with a hot-air gun. The heated surface should be hot to the touch. Be careful not to burn or blister the membrane.

9. Install Quick Applied Uncured Flashing or Quick Applied T-Joint Covers over all field splice intersections. Apply Lap Sealant according to appropriate detail.

E. TPO Membrane Splicing using Heat-Welding – VersiFleece RL TPO

1. Refer to the paragraph 3.06 of this VersiFleece specification for typical heat welding procedures.
2. The membrane has an uncoated edge on one side along the length of the sheet for membrane welding. Adjoining membrane sheets are overlapped lengthwise a minimum of 2" to provide for a minimum 1-1/2" wide heat weld. It is recommended that all splices be shingled to avoid bucking of water.
3. An uncoated edge is not provided at the ends of the rolls. Adjoining membrane sheets must be butted together and overlaid with 6"- wide TPO Reinforced Membrane, hot-air welded along all edges. Seal all membrane edges (where scrim reinforcement is exposed) with TPO Cut-Edge Sealant.

F. PVC Membrane Splicing using Heat-Welding – VersiFleece RL PVC

1. Refer to the paragraph 3.06 of this VersiFleece specification for typical heat welding procedures.

2. The membrane has an uncoated edge on one side along the length of the sheet for membrane welding. Adjoining membrane sheets are overlapped lengthwise a minimum of 2" to provide for a minimum 1-1/2" wide heat weld. It is recommended that all splices be shingled to avoid bucking of water.

3. An uncoated edge is not provided at the ends of the rolls. Adjoining membrane sheets must be butted together and overlaid with 6"- wide PVC Reinforced Membrane, and hot-air welded along all edges. PVC Cut-Edge Sealant is not required on cut edges of VersiFlex membrane.

Associated Installation Details

EPDM RL (RapidLock) Membrane Splices RL-2.1
EPDM RL (RapidLock) Membrane Splice (145-mil; 25 and 30-YEAR WARRANTY)……RL-2.1A
PVC/TPO RL (RapidLock) Membrane Splices RL-2.2A
EPDM RL (RapidLock) Roof Drain RL-6A.1
EPDM RL (RapidLock) Roof Drain with Target Patch RL-6B.1
EPDM RL (RapidLock) Parapet/Curb Flashing with No Adhesive RL-12A.1A
EPDM RL (RapidLock) Parapet/Curb Flashing with CAV-GRIP 3V (Page 1 of 2) RL-12A.1B
EPDM RL (RapidLock) Parapet/Curb Flashing with CAV-GRIP 3V (Page 2 of 2) RL-12A.1C
PVC/TPO RL (RapidLock) Parapet/Curb Flashing with No Adhesive RL-12B.1A
PVC/TPO RL (RapidLock) Parapet/Curb Flashing with CAV-GRIP 3V Adhesive on Wall RL-12B.1B

Velcro is a Trademark of Velcro BVBA

END OF ATTACHMENT

MEMBRANE SPLICE

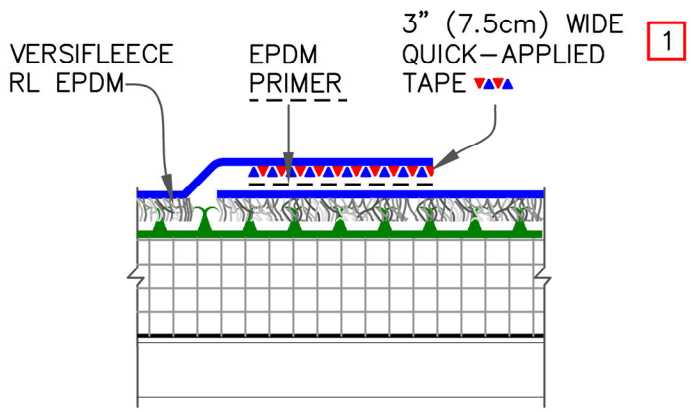

END LAP SPLICE

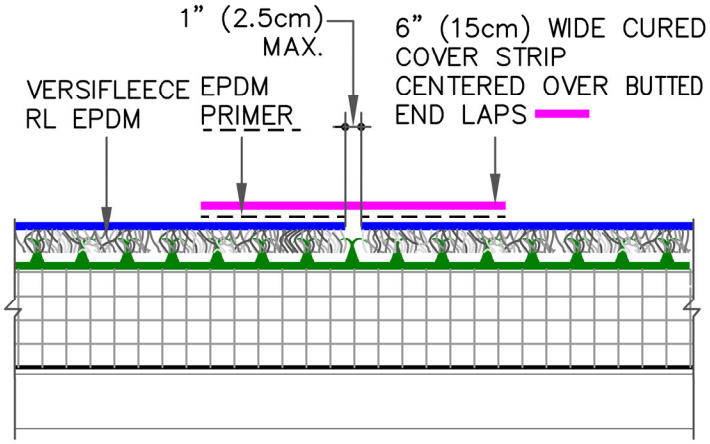

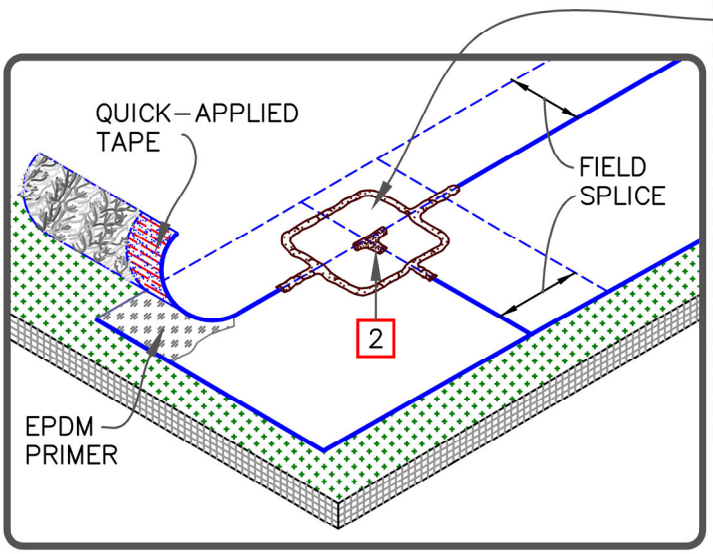

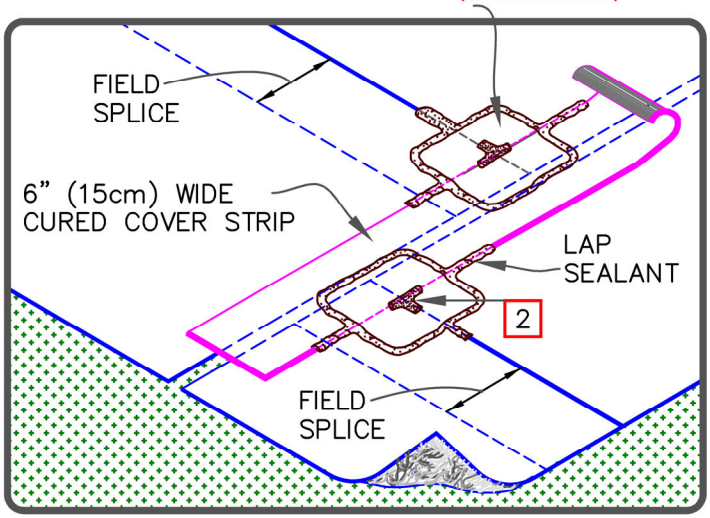

NOTES:

1. APPLY EPDM PRIMER TO MEMBRANE SURFACES PRIOR TO INSTALLING QUICK–APPLIED FLASHING AND/OR QUICK–APPLIED SEAM TAPE.

2. APPLY LAP SEALANT ALONG THE EDGE OF THE MEMBRANE SPLICE (UNDER THE 6"x6" (15x15cm) T–JOINT COVER) COVERING THE EXPOSED SPLICE TAPE 1/2" (1.5cm) IN EACH DIRECTION FROM THE SPLICE INTERSECTION.

3. 6" (15cm) QUICK–APPLIED UNCURED EPDM FLASHING MAY ALSO BE CENTERED OVER THE FIELD SPLICE INTERSECTION.

*RAPID LOCK TECHNOLOGY IS MAGNIFIED ON SCALE

VERSICO ROOFING SYSTEMS

© 2024 VERSICO

RL™ EPDM (RAPID LOCK) MEMBRANE SPLICE– PROJECTS WITH 10, 15 AND 20 YEAR WARRANTIES

→ VERSIFLEECE RL MEMBRANE

→ *INSULATION BOARD WITH RAPID LOCK TECHNOLOGY

0 SEE NOTE(S)

RAPID LOCK

RL–2.1

MEMBRANE SPLICE

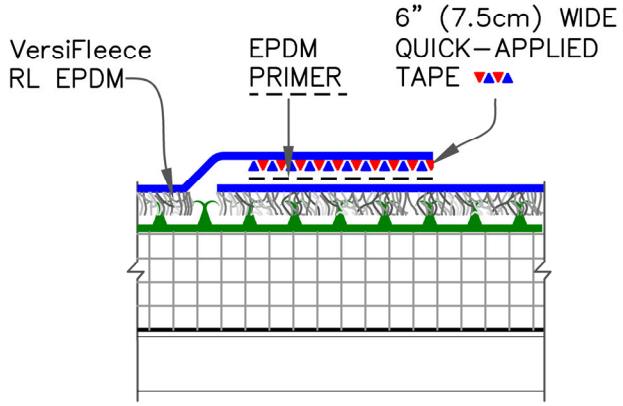

END LAP SPLICE

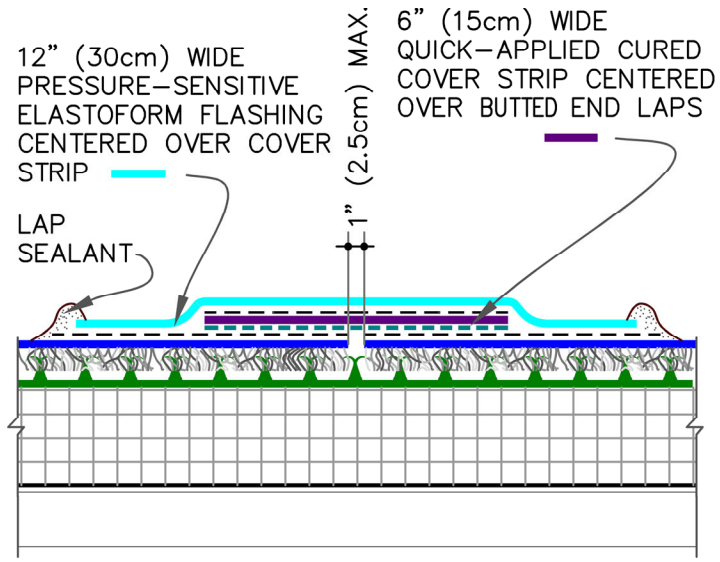

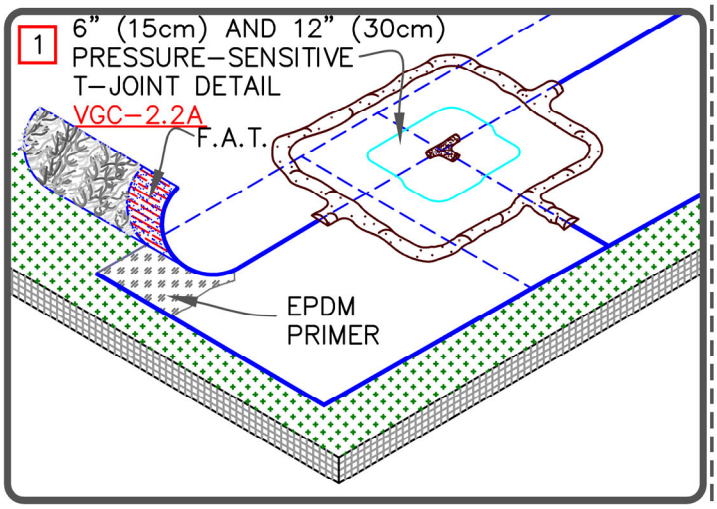

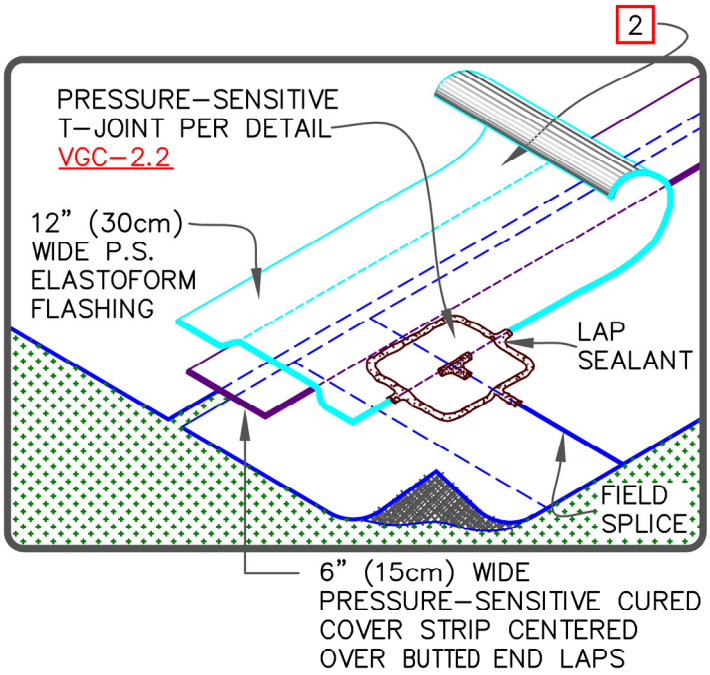

NOTES:

1. APPLY EPDM PRIMER TO MEMBRANE SURFACES PRIOR TO INSTALLING PRESSURE–SENSITIVE FLASHING AND/OR FACTORY APPLIED SecurTAPE.

2. APPLY LAP SEALANT ALONG THE EDGE OF THE MEMBRANE SPLICE (UNDER THE 6"x6" (15cm X 15cm) T–JOINT COVER) COVERING THE EXPOSED SPLICE TAPE 1/2" (1.5cm) IN EACH DIRECTION FROM THE SPLICE INTERSECTION.

3. ALL EPDM SPLICE INTERSECTIONS MUST BE OVERLAID WITH TWO LAYERS OF PRESSURE–SENSITIVE ELASTOFORM FLASHING. THE BOTTOM LAYER SHALL BE 6"X6" (15cm X 15cm) COVERED WITH A 12"X12" (30cm X 30cm) TOP LAYER. BOTH LAYERS SHALL BE CENTERED OVER THE SPLICE INTERSECTION AND SEALED WITH CONTINUOUS LAP SEALANT, AS SHOWN.

*RAPID LOCK TECHNOLOGY IS MAGNIFIED ON SCALE

VERSICO ROOFING SYSTEMS
© 2024 VERSICO

RL™ EPDM (RAPID LOCK) MEMBRANE SPLICE– PROJECTS WITH 145–MIL MEMBRANE OR 25 AND 30–YEAR WARRANTIES

→ VERSIFLEECE RL MEMBRANE
→ *INSULATION BOARD WITH RAPID LOCK TECHNOLOGY
0 SEE NOTE(S)

RAPID LOCK

RL–2.1A

MEMBRANE SPLICE

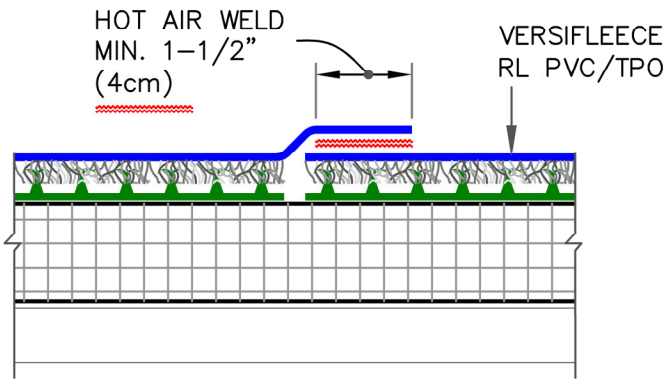

DIMENSION		cm
A	2–1/4"	6

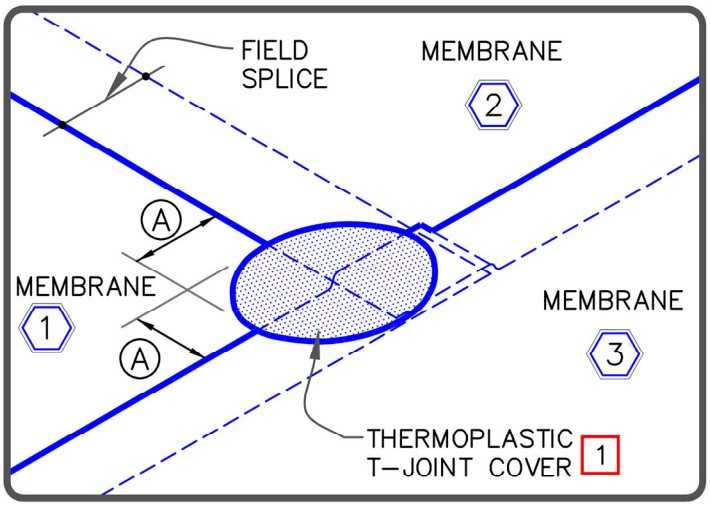

END LAP SPLICE

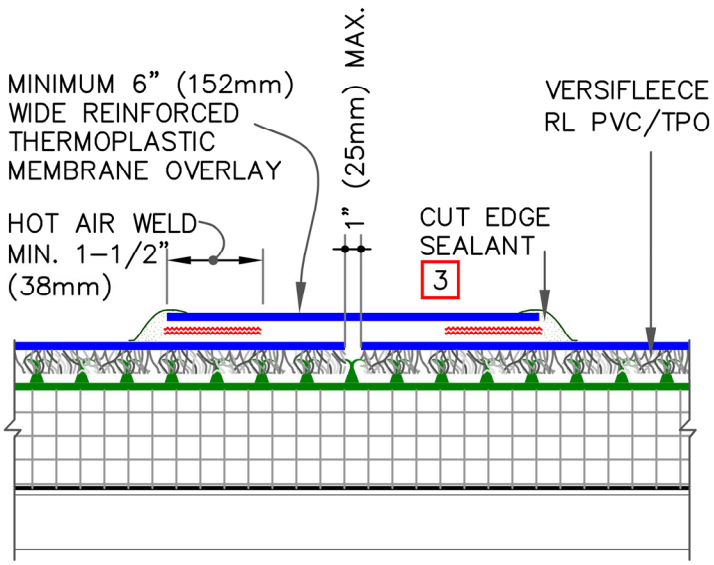

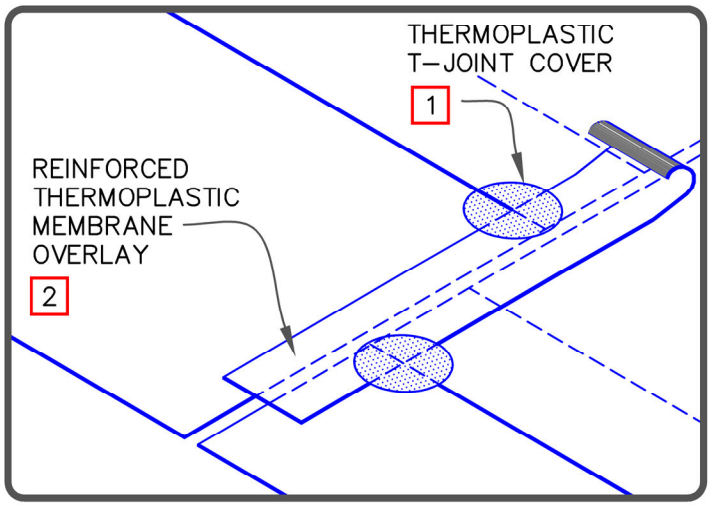

NOTES:

1. WHEN USING 115–MIL OR 135–MIL VERSIFLEECE RL PVC OR TPO MEMBRANE, APPLY A 4–1/2" (11cm) DIAMETER THERMOPLASTIC "T–JOINT" COVER AT ALL FIELD SPLICE INTERSECTIONS.
2. WHEN USING 60 MIL OR 80–MIL THERMOPLASTIC REINFORCED MEMBRANE OVERLAY, INTERSECTIONS BETWEEN SPLICES MUST BE OVERLAID WITH A 4–1/2" (11cm) DIAMETER THERMOPLASTIC "T–JOINT" COVER.
3. APPROXIMATELY 1/8" (0.5cm) DIAMETER BEAD OF CUT–EDGE SEALANT IS REQUIRED ON CUT EDGES OF REINFORCED TPO MEMBRANE.
4. WHEN USING 115–MIL VersiFleece RL TPO OR PVC MEMBRANES, MAXIMUM WARRANTY IS 20 YEARS.

*RAPID LOCK TECHNOLOGY IS MAGNIFIED ON SCALE

VERSICO ROOFING SYSTEMS
© 2024 VERSICO

RL™ PVC/TPO (RAPID LOCK) MEMBRANE SPLICES –PROJECTS UP TO 30–YEAR WARRANTIES

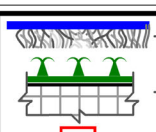

→ VERSIFLEECE RL MEMBRANE
→ *INSULATION BOARD WITH RAPID LOCK TECHNOLOGY
SEE NOTE(S)

RAPID LOCK

RL–2.2A

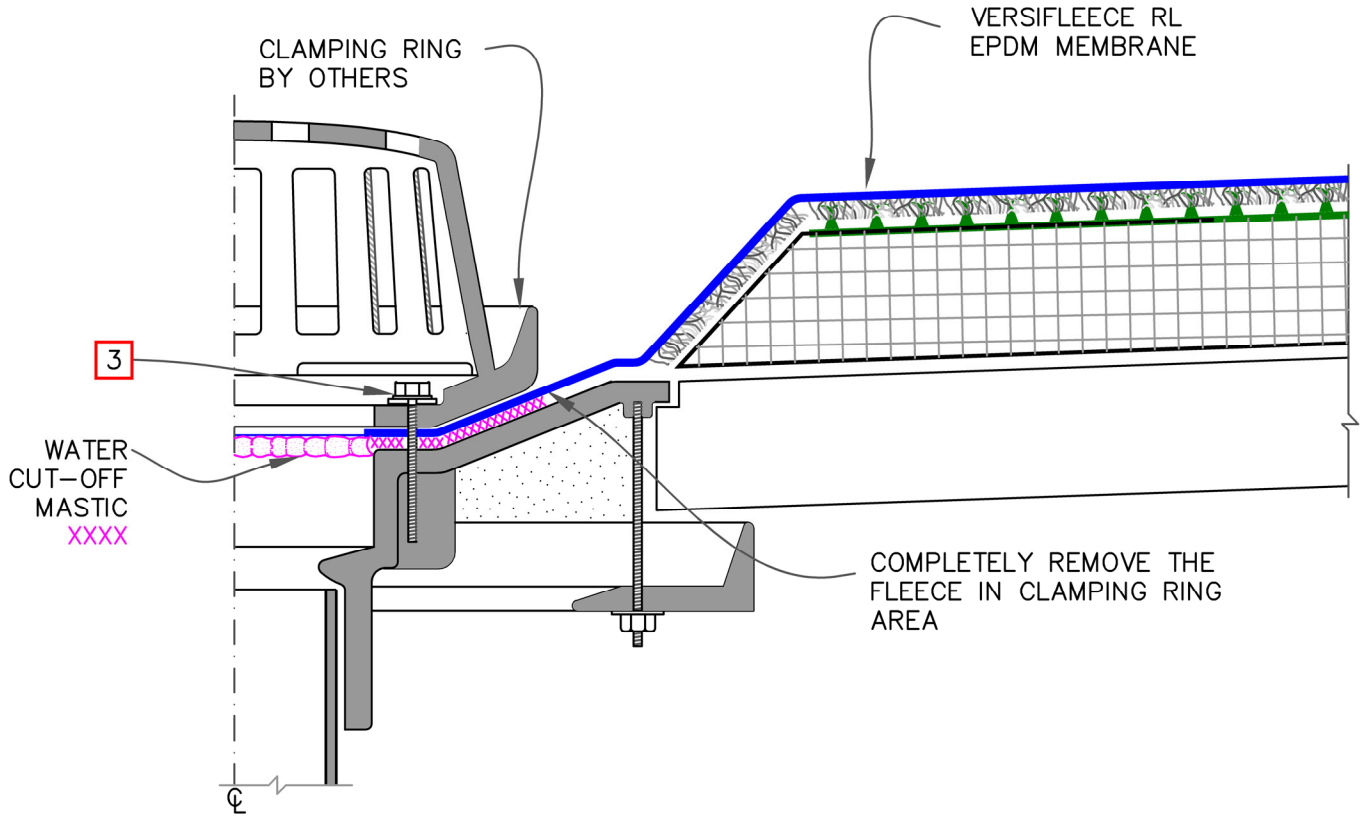

NOTES:

1. REMOVE EXISTING LEAD, FLASHING MATERIAL & ENSURE THE DRAIN RING IS COMPLETELY CLEAN DOWN TO BARE METAL.
2. FLEECE RL BACKING MUST BE REMOVED FROM THE MEMBRANE SO THAT WATER CUT OFF MASTIC IS IN DIRECT CONTACT.
3. THE HOLE IN THE MEMBRANE SHALL EXCEED THE DIAMETER OF THE DRAIN PIPE, BUT SHALL BE NO LESS THAN 1/2" (1.5cm) FROM THE ATTACHMENT POINTS OF THE DRAIN CLAMPING RING.
4. ALL BOLTS OR CLAMPS MUST BE IN PLACE TO PROVIDE CONSTANT COMPRESSION ON WATER CUT–OFF MASTIC.
5. FIELD SPLICES MUST BE LOCATED AT LEAST 6 INCHES (15cm) OUTSIDE THE DRAIN SUMP.
6. ROOF DRAIN SIZE AND NUMBER OF DRAINS SHALL BE IN ACCORDANCE WITH THE LOCAL CODES.

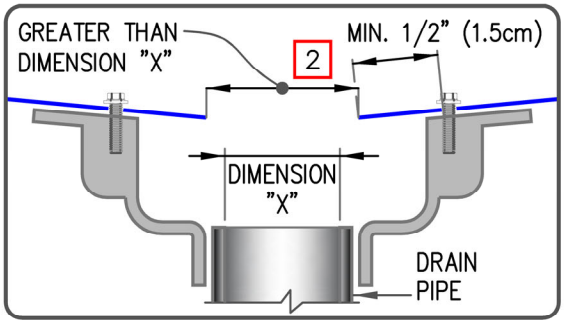

*RAPID LOCK TECHNOLOGY IS MAGNIFIED ON SCALE

VERSICO ROOFING SYSTEMS
© 2024 VERSICO

ROOF DRAIN WITH CONTINUOUS MEMBRANE

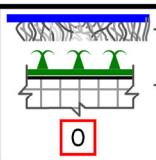

VERSIFLEECE RL MEMBRANE
*INSULATION BOARD WITH RAPID LOCK TECHNOLOGY
SEE NOTE(S)

RAPID LOCK

RL–6A.1

CAUTION

EPDM MEMBRANE SPLICES SHALL INCORPORATE 6" (15cm) WIDE FIELD APPLIED QA TAPE FOR PROJECTS WITH 20, 25 & 30–YEAR WARRANTIES.

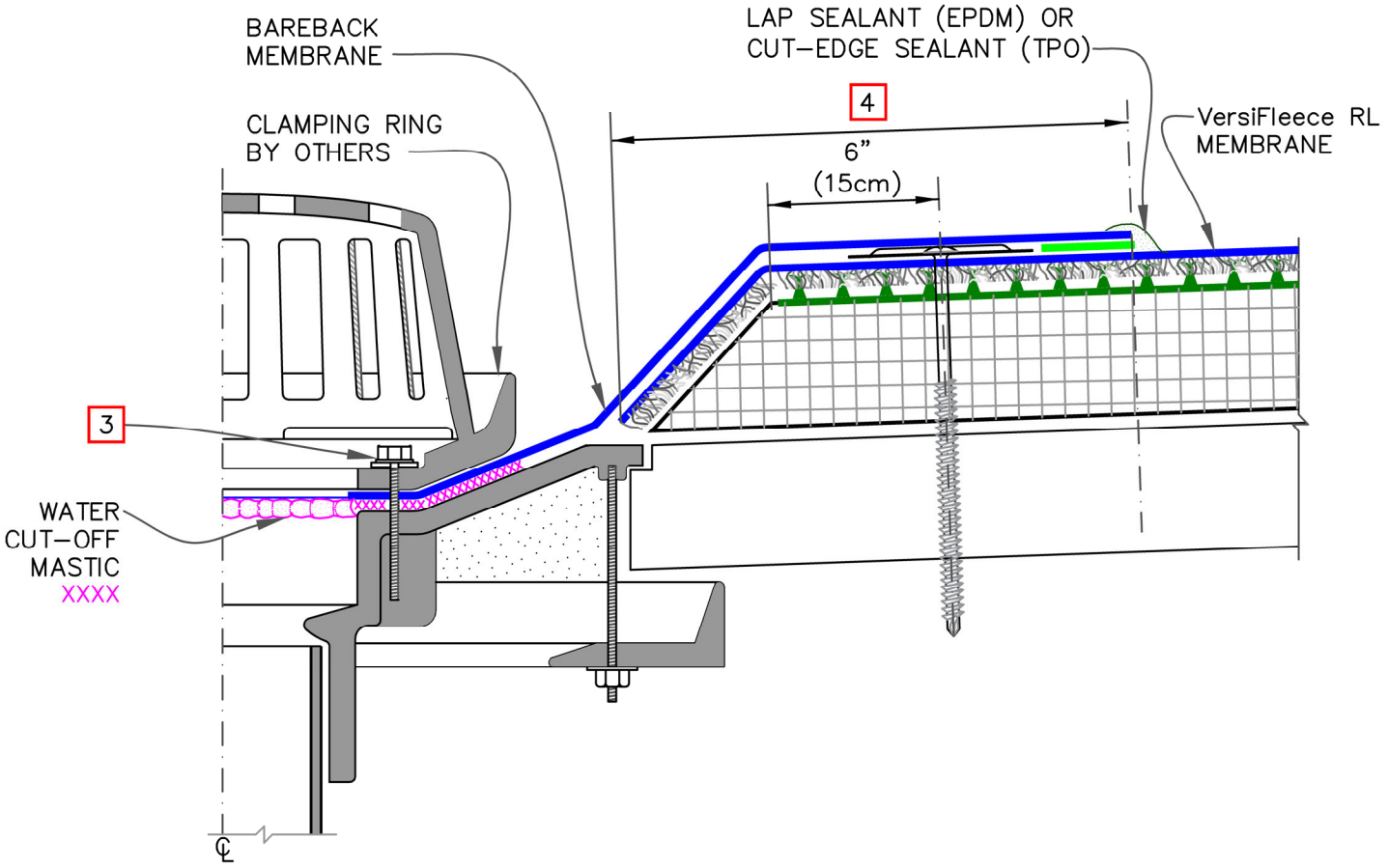

NOTES:

1. REMOVE EXISTING LEAD, FLASHING MATERIAL & ENSURE THE DRAIN RING IS COMPLETELY CLEAN DOWN TO BARE METAL.
2. THE HOLE IN THE MEMBRANE SHALL EXCEED THE DIAMETER OF THE DRAIN PIPE, BUT SHALL BE NO LESS THAN 1/2" (1.5cm) FROM THE ATTACHMENT POINTS OF THE DRAIN CLAMPING RING.
3. ALL BOLTS OR CLAMPS MUST BE IN PLACE TO PROVIDE CONSTANT COMPRESSION ON WATER CUT–OFF MASTIC.
4. SPLICES SHALL BE COMPLETED USING MIN. 3" (7.5CM) WIDE QA TAPE/PRIMER WITH EPDM MEMBRANE AND MIN. 1–1/2" (4cm) HOT AIR WELD WITH TPO/PVC MEMBRANES
5. FIELD SPLICES MUST BE LOCATED AT LEAST 6 INCHES (15cm) OUTSIDE THE DRAIN SUMP.
6. APPROXIMATELY 1/8" (0.5cm) DIAMETER BEAD OF CUT–EDGE SEALANT IS REQUIRED ON CUT EDGES OF REINFORCED TPO MEMBRANE.
7. ROOF DRAIN SIZE AND NUMBER OF DRAINS SHALL BE IN ACCORDANCE WITH THE LOCAL CODES.

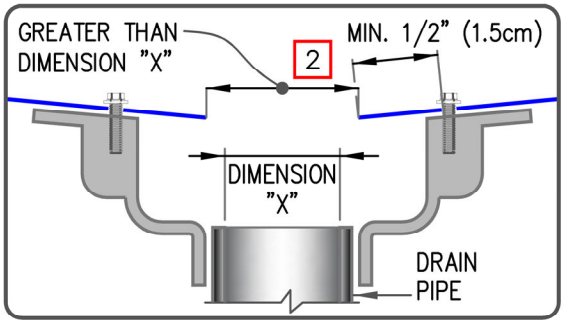

*RAPID LOCK TECHNOLOGY IS MAGNIFIED ON SCALE

VERSICO ROOFING SYSTEMS

© 2024 VERSICO

ROOF DRAIN WITH SEPARATE TARGET SPLICE

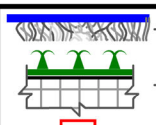

→ VERSIFLEECE RL MEMBRANE

→ *INSULATION BOARD WITH RAPID LOCK TECHNOLOGY

0 SEE NOTE(S)

RAPID LOCK

RL–6B.1

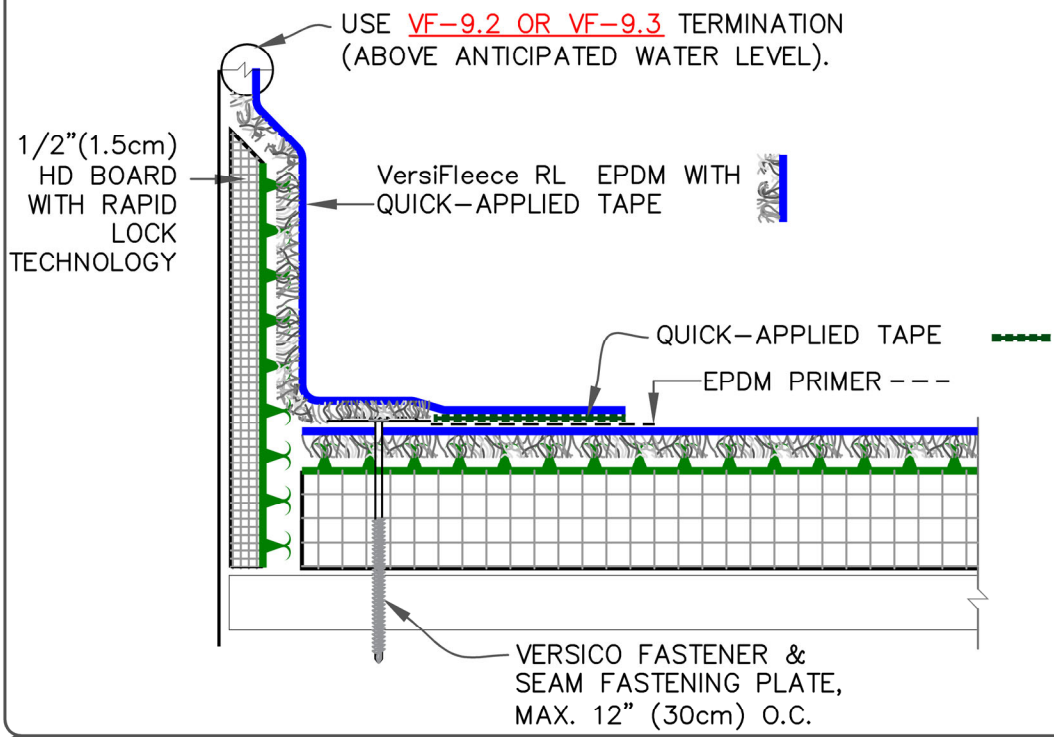

VersiFleece RL EPDM

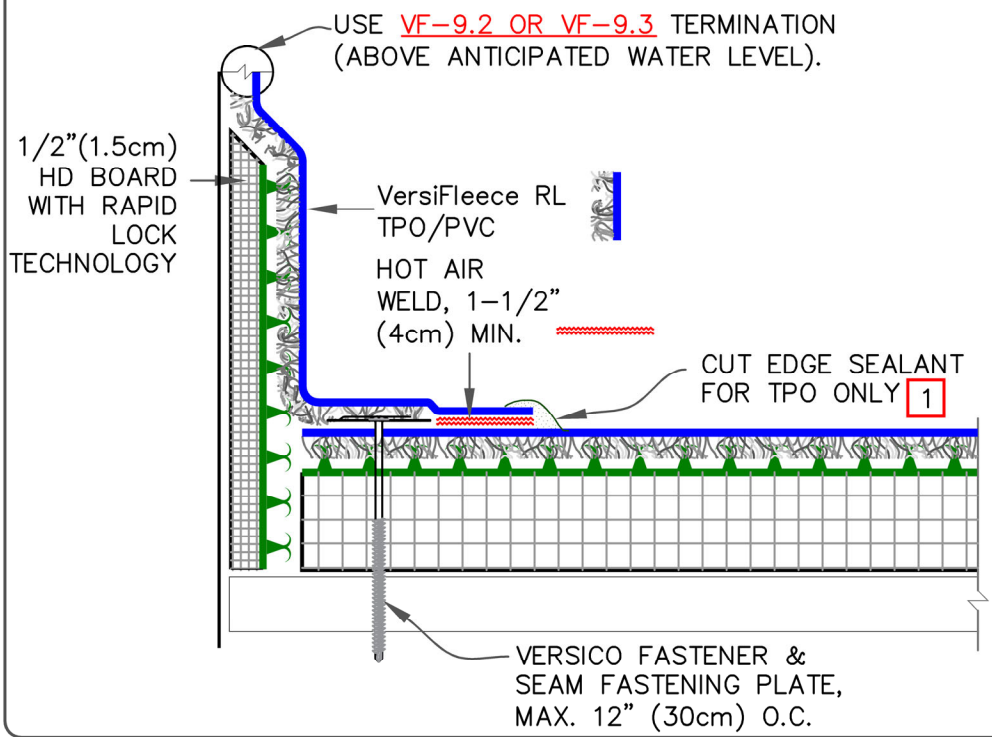

NOTE:

1. APPROXIMATELY 1/8" (0.5cm) DIAMETER BEAD OF CUT-EDGE SEALANT IS REQUIRED ON CUT EDGES OF REINFORCED TPO MEMBRANE ONLY.

VersiFleece RL TPO/PVC

*RAPID LOCK TECHNOLOGY IS MAGNIFIED ON SCALE

VERSICO ROOFING SYSTEMS

© 2024 VERSICO

PARAPET/CURB WITH SEPARATE MEMBRANE: NO ADHESIVE

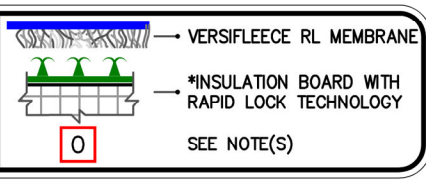

RAPID LOCK

RL-12A.1A

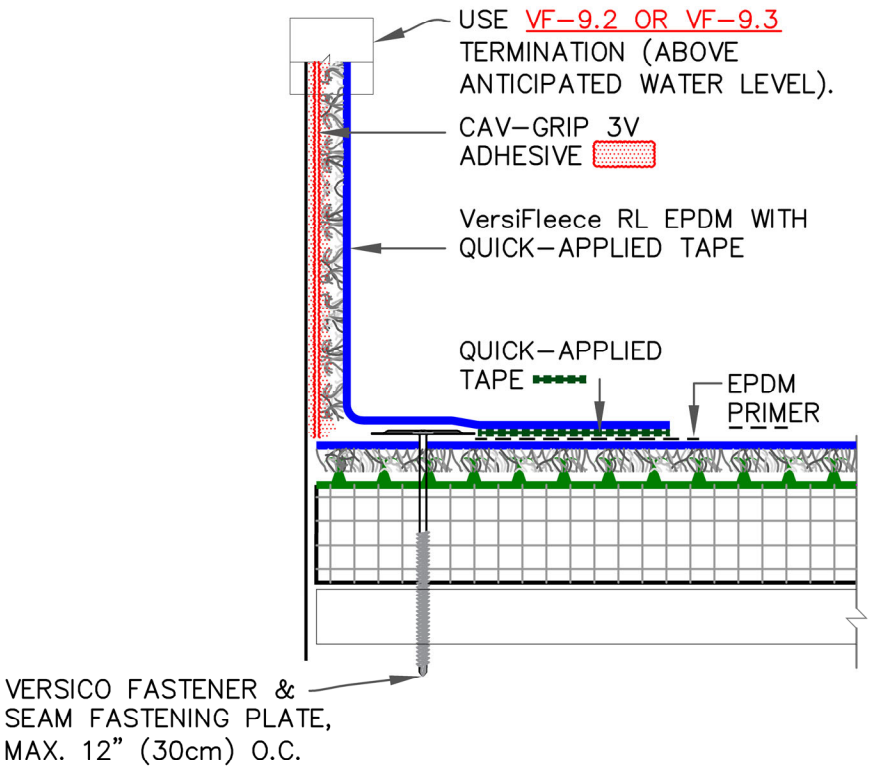

VersiFleece RL EPDM

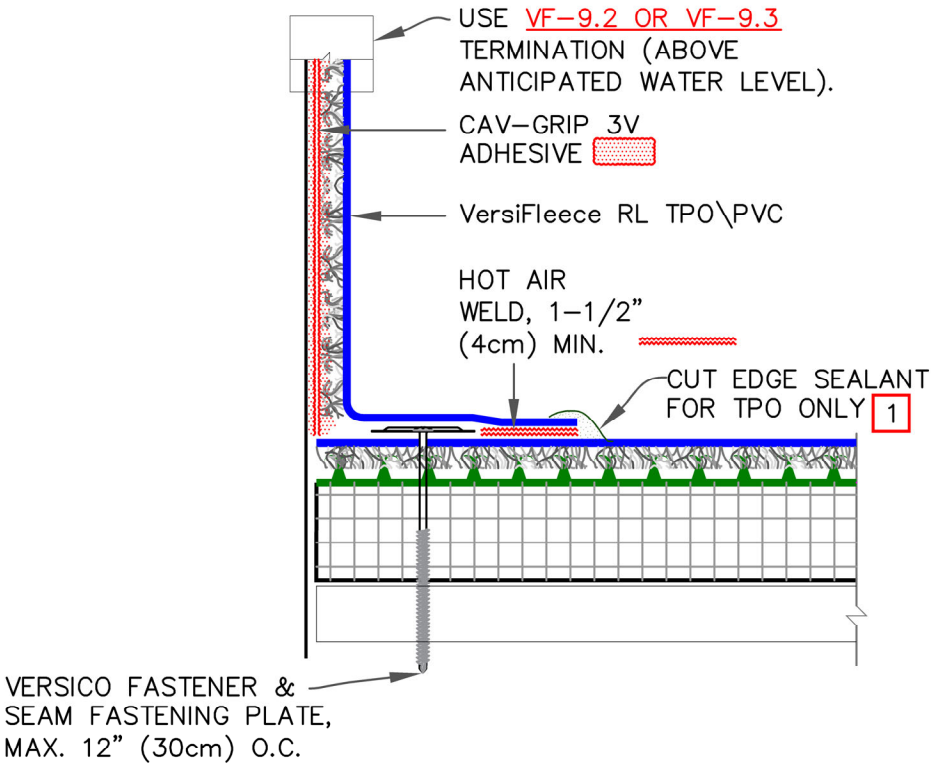

NOTES:

1. APPROXIMATELY 1/8" (0.5cm) DIAMETER BEAD OF CUT-EDGE SEALANT IS REQUIRED ON CUT EDGES OF REINFORCED TPO MEMBRANE ONLY.

VersiFleece RL TPO/PVC

*RAPID LOCK TECHNOLOGY IS MAGNIFIED ON SCALE

VERSICO ROOFING SYSTEMS

© 2024 VERSICO

PARAPET/CURB WITH SEPARATE MEMBRANE: RL MEMBRANE ADHERED WITH CAV-GRIP 3V

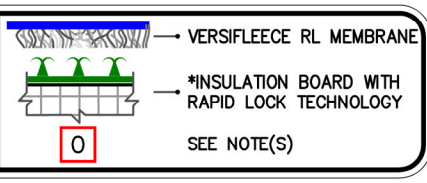

RAPID LOCK

RL-12A.1B

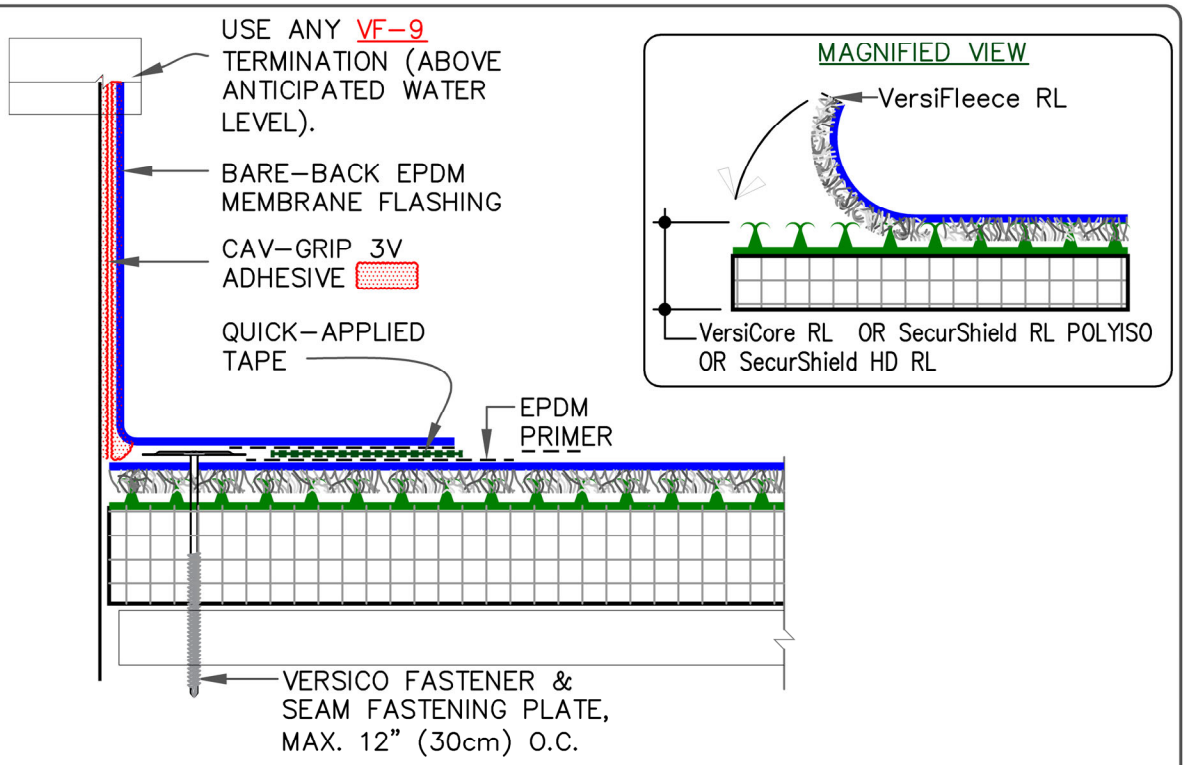

VersiFleece RL EPDM

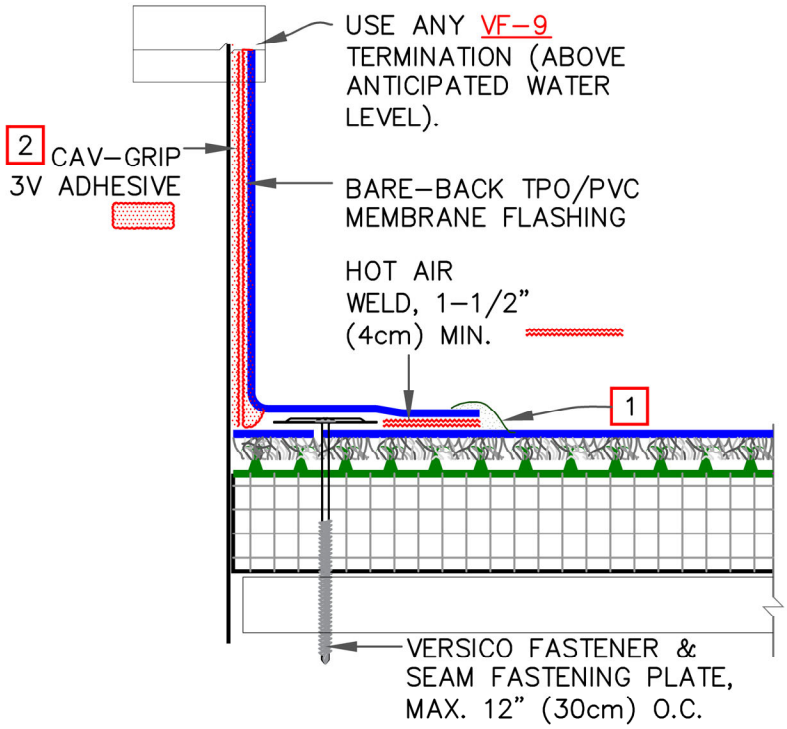

NOTES:

1. APPROXIMATELY 1/8" (0.5cm) DIAMETER BEAD OF CUT-EDGE SEALANT IS REQUIRED ON CUT EDGES OF REINFORCED TPO MEMBRANE ONLY.
2. FOR PVC USE CAV-GRIP PVC IN PLACE OF CAV-GRIP 3V.

VersiFleece RL TPO/PVC

*RAPID LOCK TECHNOLOGY IS MAGNIFIED ON SCALE

VERSICO ROOFING SYSTEMS
© 2024 VERSICO

PARAPET/CURB WITH SEPARATE MEMBRANE: BARE-BACK MEMBRANE ADHERED WITH CAV-GRIP 3V/CAV-GRIP PVC

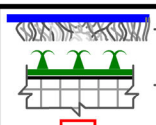

VERSIFLEECE RL MEMBRANE
*INSULATION BOARD WITH RAPID LOCK TECHNOLOGY
0 SEE NOTE(S)

RAPID LOCK

RL-12A.1C

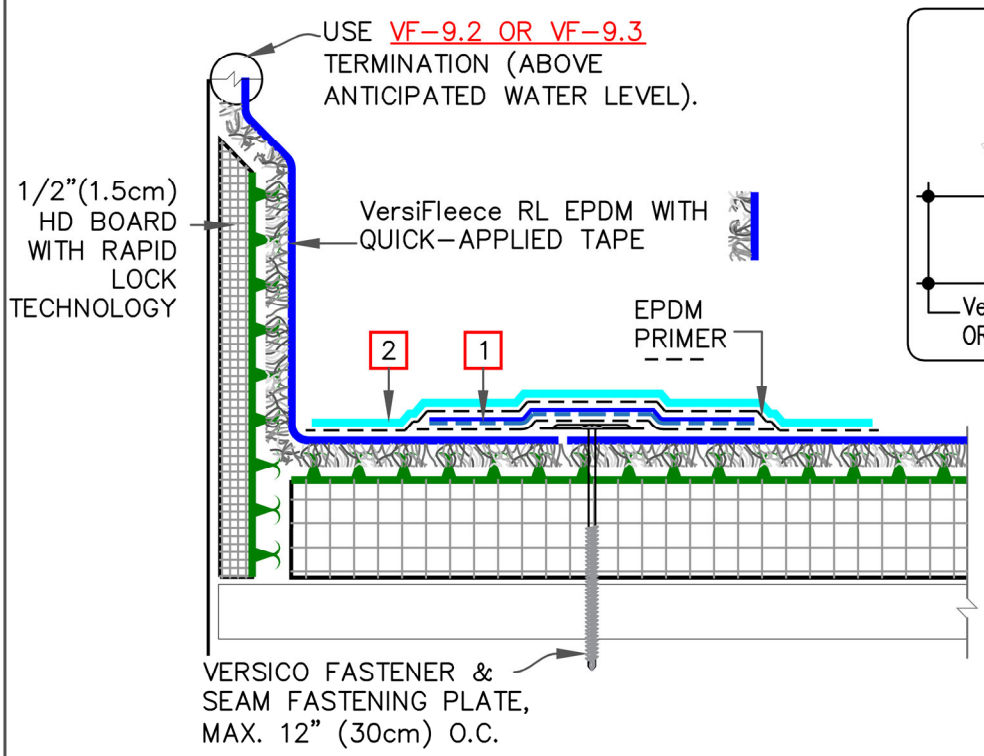

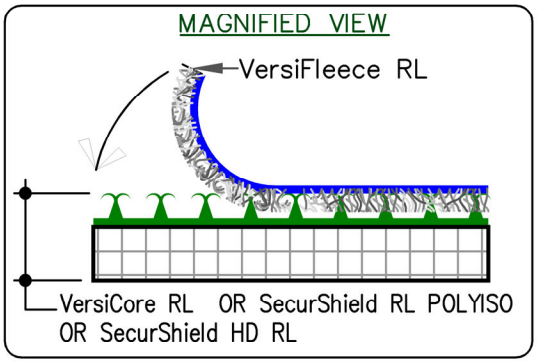

NOTES:

1. 6" (15cm) MIN. WIDE QUICK-APPLIED CURED COVER STRIP CENTERED OVER FASTENERS.
2. 12" (30cm) WIDE QUICK-APPLIED UNCURED EPDM OVER COVER STRIP FOR USE IN 25 & 30 YEAR WARRANTY PROJECTS

VersiFleece RL EPDM – MAXIMUM 30 YEAR WARRANTY

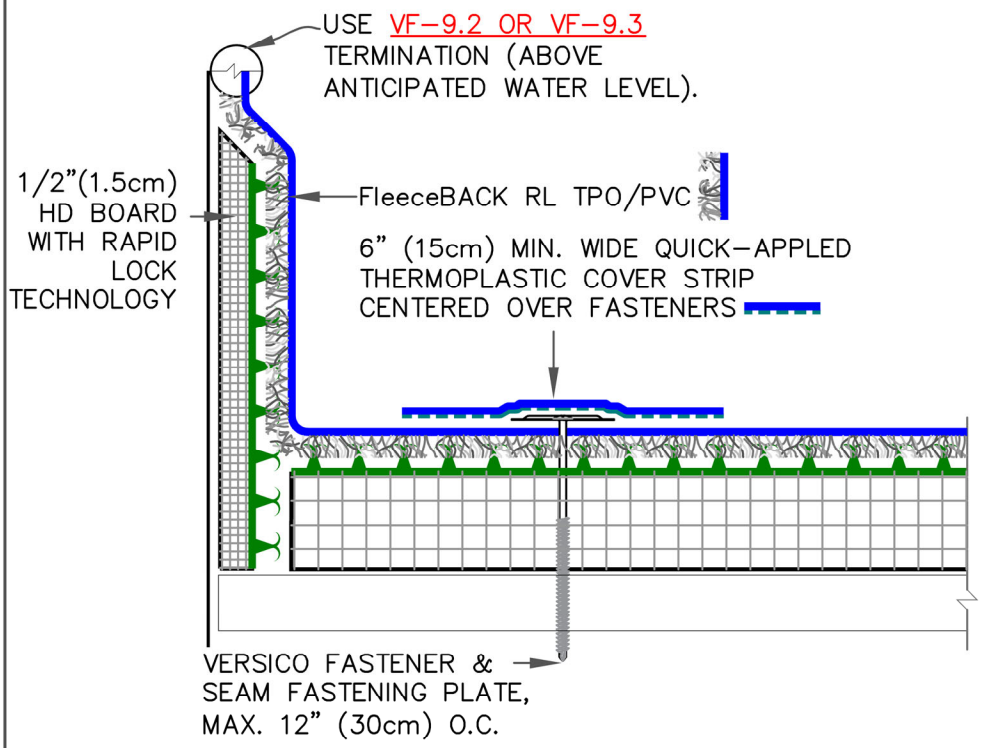

VersiFleece RL TPO/PVC – MAXIMUM 20 YEAR WARRANTY

*RAPID LOCK TECHNOLOGY IS MAGNIFIED ON SCALE

VERSICO ROOFING SYSTEMS

© 2024 VERSICO

PARAPET/CURB WITH CONTINUOUS MEMBRANE–NO ADHESIVE

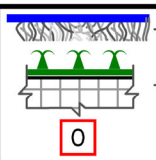

VERSIFLEECE RL MEMBRANE

*INSULATION BOARD WITH RAPID LOCK TECHNOLOGY

SEE NOTE(S)

RAPID LOCK

RL–12B.1A

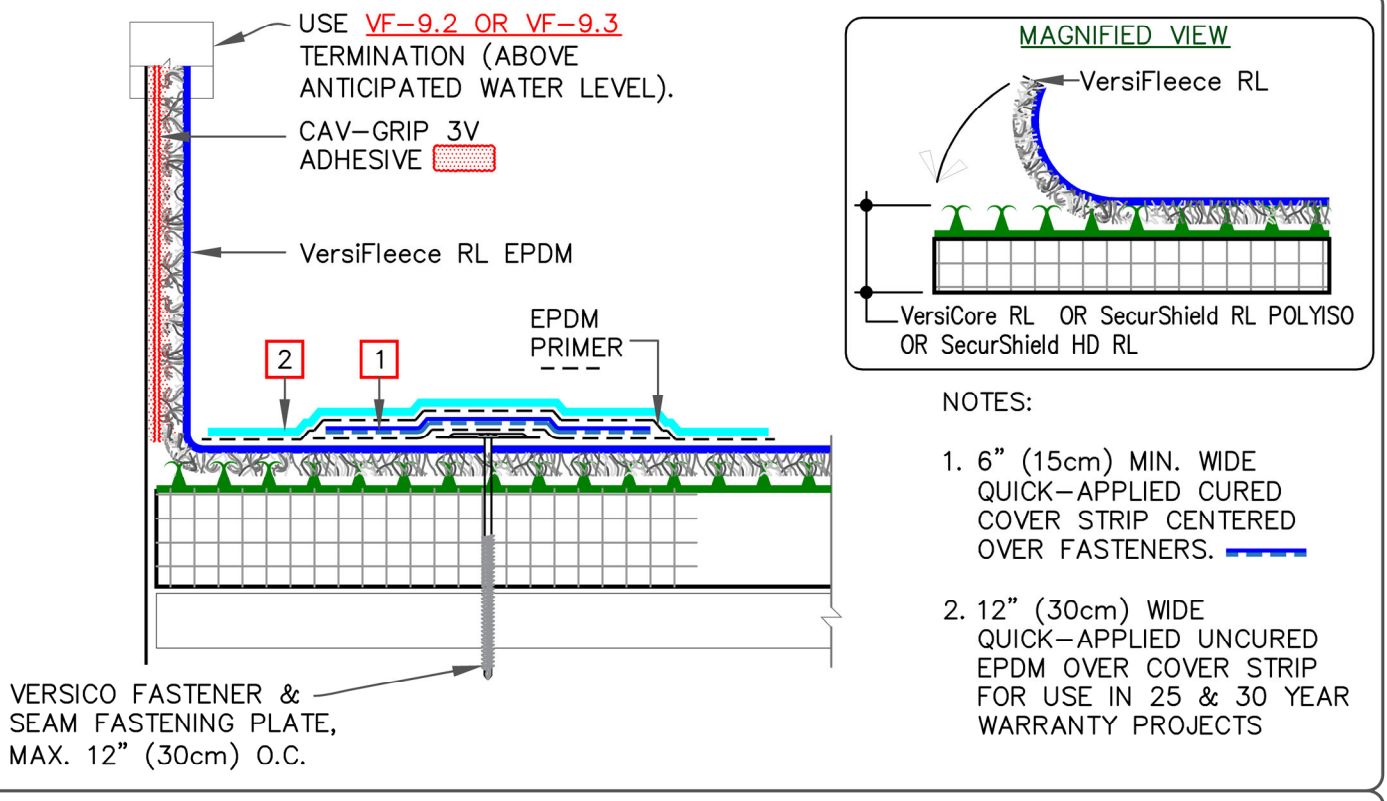

NOTES:

1. 6" (15cm) MIN. WIDE QUICK-APPLIED CURED COVER STRIP CENTERED OVER FASTENERS.
2. 12" (30cm) WIDE QUICK-APPLIED UNCURED EPDM OVER COVER STRIP FOR USE IN 25 & 30 YEAR WARRANTY PROJECTS

VersiFleece RL EPDM – MAXIMUM 30 YEAR WARRANTY

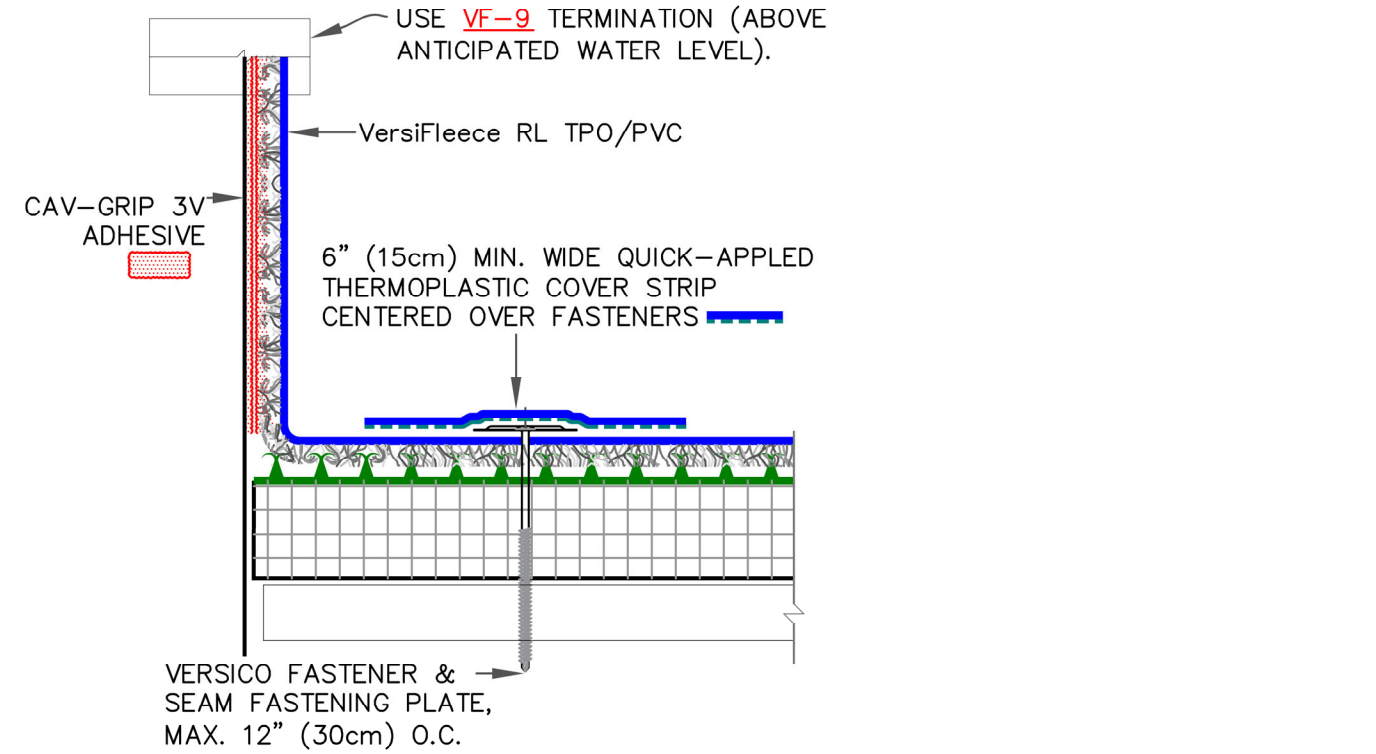

VersiFleece RL TPO/PVC – MAXIMUM 20 YEAR WARRANTY

*RAPID LOCK TECHNOLOGY IS MAGNIFIED ON SCALE

VERSICO ROOFING SYSTEMS

© 2024 VERSICO

PARAPET/CURB WITH CONTINUOUS MEMBRANE-RL MEMBRANE ADHERED WITH CAV-GRIP 3V

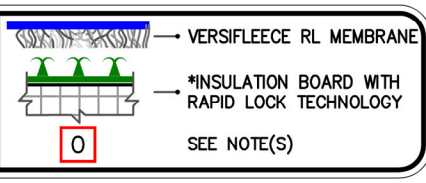

RAPID LOCK

RL-12B.1B

VersiFleece TPO/PVC/KEE HP Fully Adhered Roofing System

January 2024

Table of Contents

Metal Edges and Gravel Stops **Detail**
VersiTrim Drip Edge Fascia…….. VF-1.1
VersiTrim Heat Weldable Drip Edge …… VF-1.2A
Metal Bar Edge Termination…… VF-1.3A
VersiTrim 200…….. VF-1.4A
VersiTrim 300…….. VF-1.5A
VersiTrim 2000 & 3000…….. VF-1.6A

Membrane Splices
Thermoplastic Membrane Splices……..... VF-2.2A

Expansion Joints
Deck-to-Deck Expansion Joint…… VF-3.1A
Deck-to-Wall Expansion Detail…… VF-3.2A

Drains
Roof Drain with Continuous Membrane……..VF-6.1A
Roof Drain with Separate Target Splice…….. VF-6.2A

Pipe Flashing
Pre-molded Pipe Seal…….. VF-8.1A
Field Fabricated Pipe Flashing…… VF-8.2A

Terminations
Membrane Terminations (Page 1 of 3)……... VF-9.0
Membrane Terminations (page 2 of 3)……... VF-9.0
Membrane Terminations (page 2 of 3)……... VF-9.0

Parapet Flashing
Parapet / Curb with Separate Membrane – Full Coverage……VF-12.1A
Parapet / Curb with Separate Membrane – Bead Applied……VF-12.1B
Parapet / Curb with Continuous Membrane – Full Coverage…… VF-12.2A
Parapet / Curb with Continuous Membrane – Bead Applied…… VF-12.2B
Parapet / Curb with Water Based Adhesive…… VF-12.3
Parapet / Curb with Continuous Membrane – Bead Applied Over Concrete……VF-12.4

Inside / Outside Corners
Thermoplastic Pre-Molded Inside Corner…… VF-15.3A
Thermoplastic Pre-Molded Outside Corner…….. VF-15.4A

Sealant Pocket
Thermoplastic Molded Sealant Pocket…….. VF-16.2A

Through-Wall Scupper
Through-Wall Scupper with Thermoplastic Coated Metal…….. VF-18.2A

Rib Profile
Simulation of Metal Roof in Thermoplastic Membranes…… VF-25.1A
VersiFleece membrane Attachment Using Bead Adhesive…… VF-27

CAUTION

DETAIL NOT FOR USE ON 25 & 30-YEAR WARRANTY PROJECTS. ACCEPTABLE EDGING SHALL CONFORM WITH THERMOPLASTIC VERSIFLEECE VF-1.2, 1.3, 1.4, 1.5 OR 1.6.

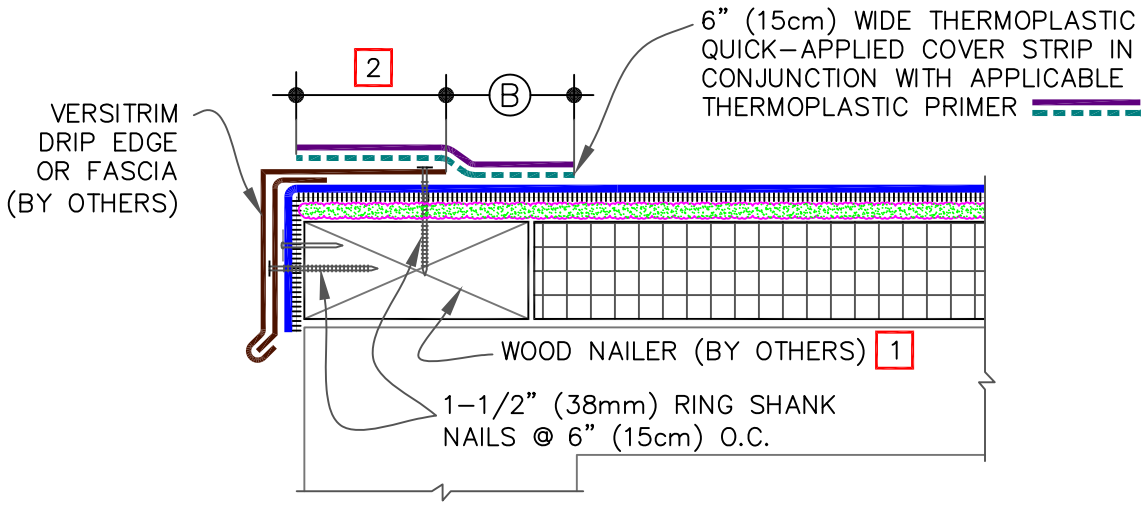

DIMENSIONS		cm	
A	1/2"	1.5	TO
	1"	2.5	
B	2"	5	MIN.

NOTES:

1. WOOD NAILER MUST EXTEND PAST TOTAL WIDTH OF METAL FASCIA DECK FLANGE.
2. METAL FASCIA DECK FLANGE MUST BE TOTALLY COVERED BY QUICK-APPLIED COVER STRIP WITH MINIMUM 2" (5cm) COVERAGE PAST NAIL HEADS.
3. TO REMOVE FINISHING OILS, SCRUB METAL FLANGE WITH WEATHERED MEMBRANE CLEANER; ALLOW TO DRY PRIOR TO APPLYING PRIMER.
4. APPLY APPLICABLE THERMOPLASTIC PRIMER TO METAL FLANGE AND MEMBRANE SURFACE PRIOR TO INSTALLING QUICK-APPLIED FLASHING.
5. WHEN METAL FASCIA BY OTHERS IS USED, FASTENER TYPE AND FASTENING FREQUENCY SHALL BE RECOMMENDED BY METAL EDGE MANUFACTURER.

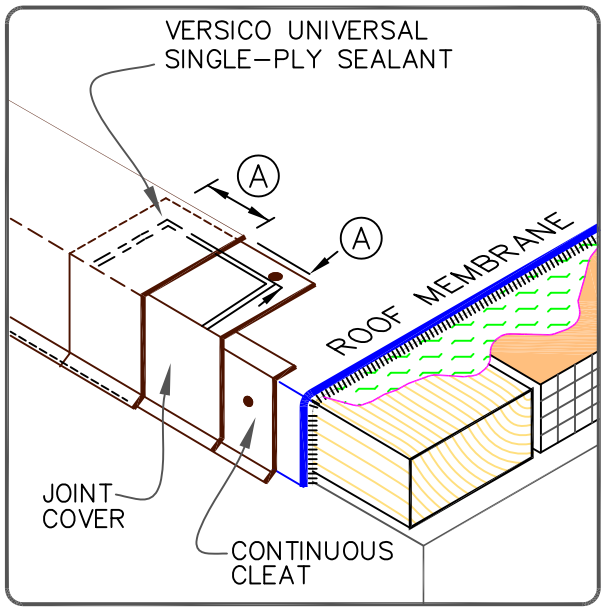

VERSICO ROOFING SYSTEMS

© 2024 VERSICO

VERSITRIM DRIP EDGE FASCIA

→ VERSIFLEECE MEMBRANE
→ FLEXIBLE DASH
→ APPROVED SUBSTRATE
0 → SEE NOTE(S)

THERMOPLASTIC VERSIFLEECE ADHERED

VF-1.1

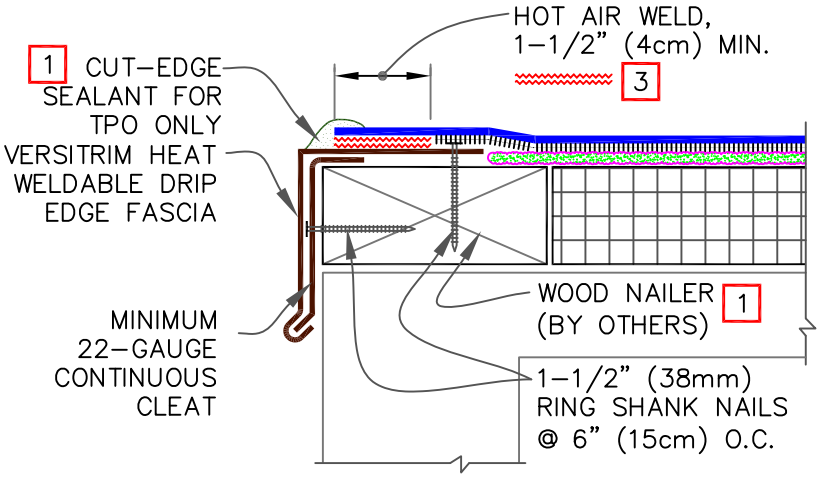

NOTES:

1. APPROXIMATELY 1/8" (0.5cm) DIAMETER BEAD OF CUT–EDGE SEALANT IS REQUIRED ON CUT EDGES OF REINFORCED TPO MEMBRANE.
2. WOOD NAILER MUST EXTEND PAST TOTAL WIDTH OF METAL FASCIA DECK FLANGE.
3. POSITION MEMBRANE WITH SELVAGE EDGE TO AVOID REMOVAL OF FLEECE BACKING.

1

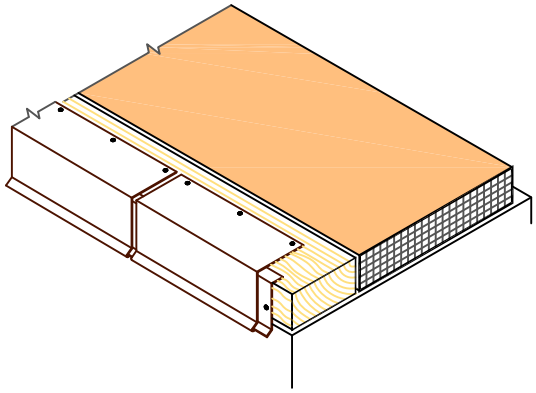

INSTALL CONTINUOUS CLEAT AND COATED METAL WITH 1/8"–1/4" (0.5–1cm) JOINTS BETWEEN ADJOINING SECTIONS.

2

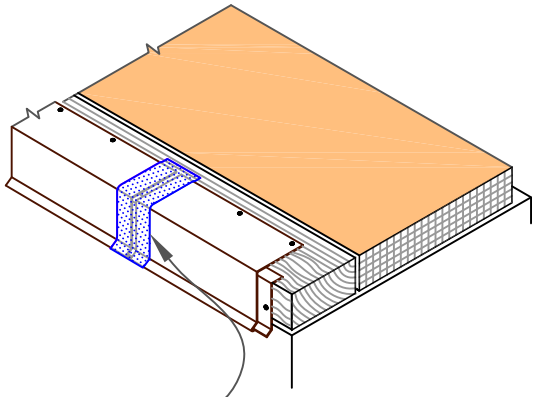

HEAT WELD 3" (7.5cm) WIDE PIECE OF NON–REINFORCED THERMOPLASTIC MEMBRANE OVER JOINT

3

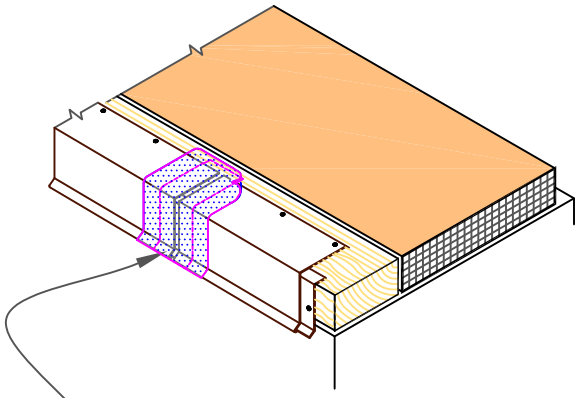

HEAT WELD 6" (15cm) WIDE PIECE OF NON–REINFORCED MEMBRANE OVER JOINT

4

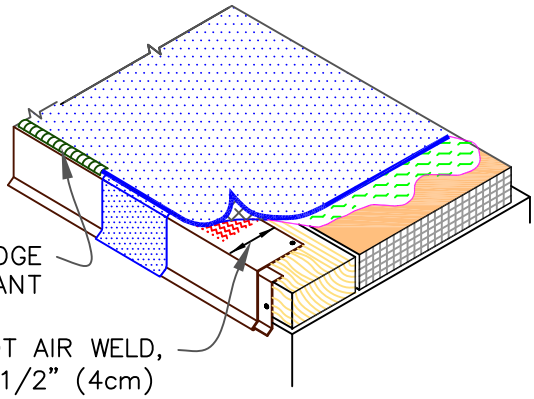

CUT–EDGE SEALANT

HOT AIR WELD, 1–1/2" (4cm) MIN.

POSITION FIELD MEMBRANE AND HEAT WELD COATED METAL A MINIMUM OF 1–1/2" (4cm) AS SHOWN.

VERSICO ROOFING SYSTEMS

© 2024 VERSICO

VERSITRIM HEAT WELDABLE DRIP EDGE

→ VERSIFLEECE MEMBRANE
→ FLEXIBLE DASH
→ APPROVED SUBSTRATE
0 → SEE NOTE(S)

THERMOPLASTIC VERSIFLEECE ADHERED

VF–1.2A

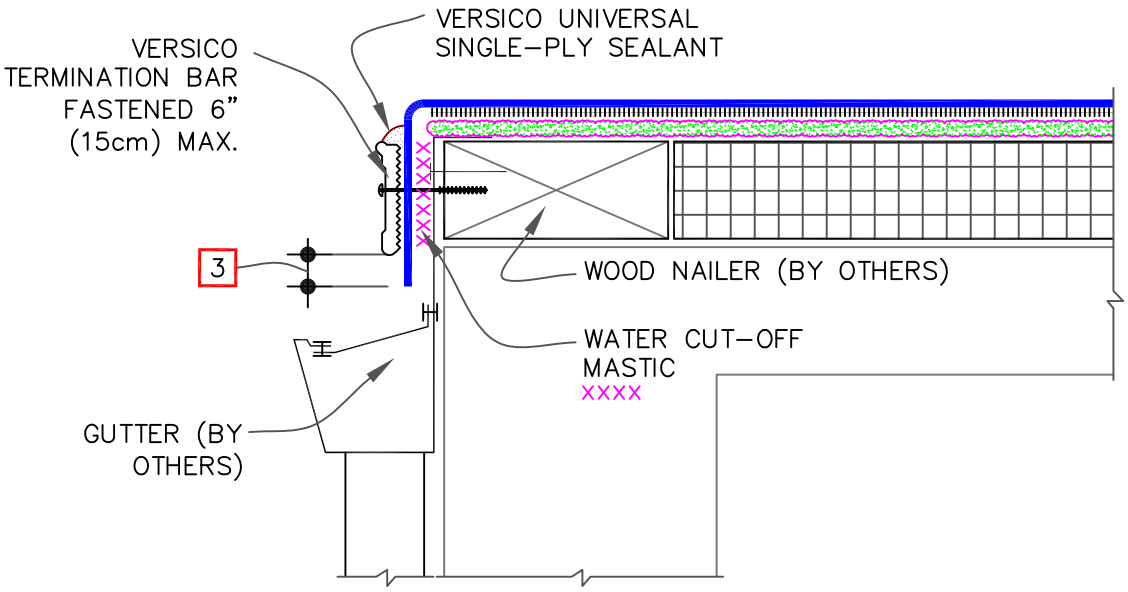

NOTES:

1. POSITION MEMBRANE WITH SELVAGE EDGE AT TERMINATION BAR LOCATION TO AVOID REMOVAL OF FLEECE BACKING.

2. FASTENING OF METAL TERMINATION BAR MUST PROVIDE CONSTANT COMPRESSION ON WATER CUT-OFF MASTIC.

3. ALLOW MEMBRANE SHEET TO EXTEND 1/2" (1.5cm) MINIMUM BELOW THE METAL TERMINATION BAR.

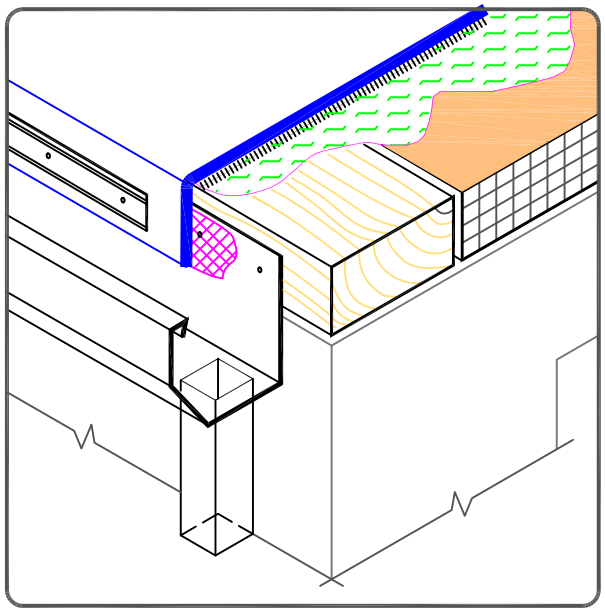

VERSICO ROOFING SYSTEMS

© 2024 VERSICO

METAL BAR EDGE TERMINATION

→ VERSIFLEECE MEMBRANE
→ FLEXIBLE DASH
→ APPROVED SUBSTRATE
0 → SEE NOTE(S)

THERMOPLASTIC VERSIFLEECE ADHERED

VF-1.3A

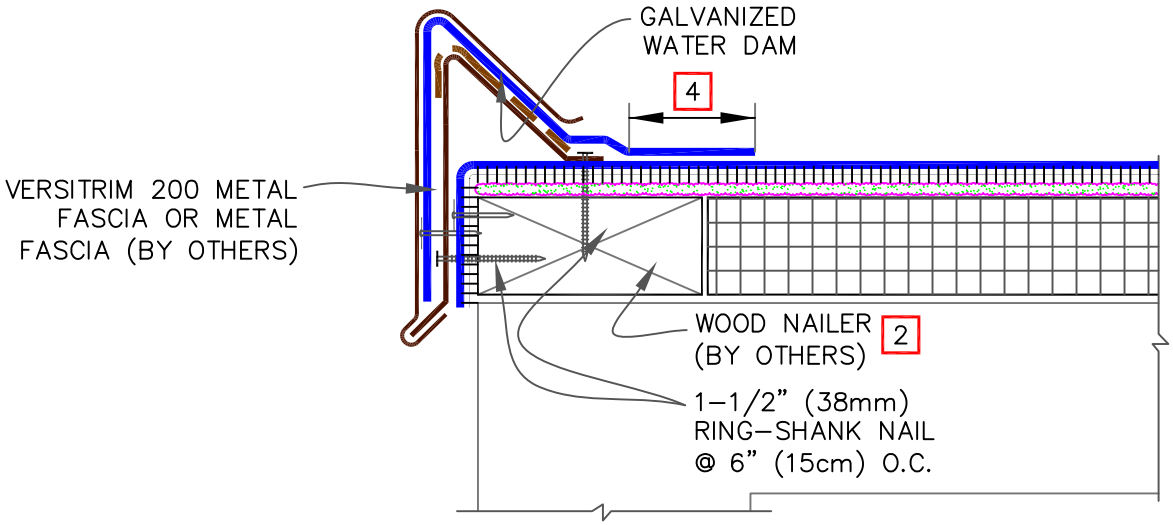

NOTES:

1. REFER TO VERSITRIM 200 INSTALLATION INSTRUCTION MANUAL FOR STEP–BY–STEP INSTALLATION PROCEDURES.
2. WOOD NAILER MUST EXTEND PAST TOTAL WIDTH OF GRAVEL STOP DECK FLANGE.
3. WHEN METAL FASCIA BY OTHERS IS USED, FASTENER TYPE AND FASTENING FREQUENCY SHALL BE RECOMMENDED BY METAL EDGE MANUFACTURER.

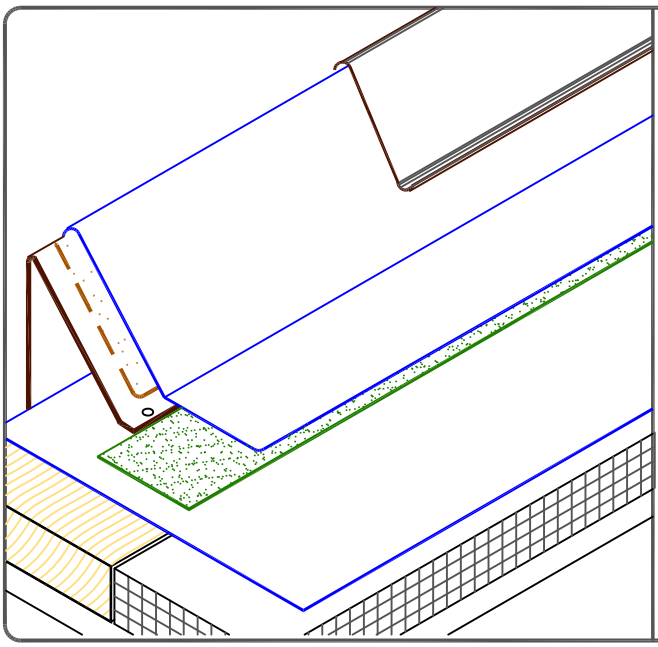

AT CORNERS, SEAM FASTENING PLATES MUST BE INSTALLED 12" (30cm) MAX. FROM THE BASE OF THE WATER–DAM AND SHALL EXTEND 36" (91cm) MINIMUM IN EACH DIRECTION. STRIP IN WITH REINFORCED THERMOPLASTIC FLASHING AND HEAT WELD ON ALL SIDES.

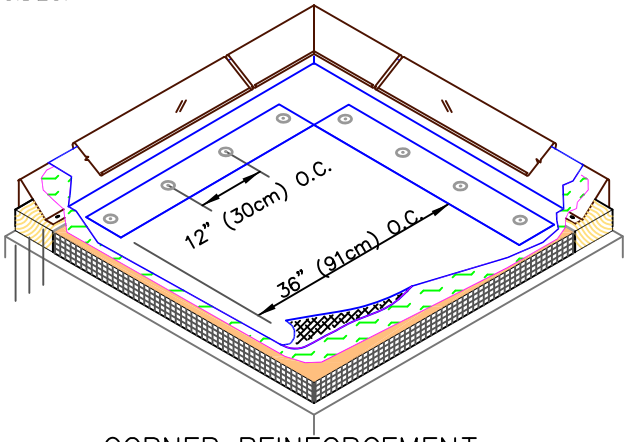

CORNER REINFORCEMENT

VERSICO ROOFING SYSTEMS
© 2024 VERSICO

VERSITRIM 200

→ VERSIFLEECE MEMBRANE
→ FLEXIBLE DASH
→ APPROVED SUBSTRATE
0 → SEE NOTE(S)

THERMOPLASTIC VERSIFLEECE ADHERED

VF–1.4A

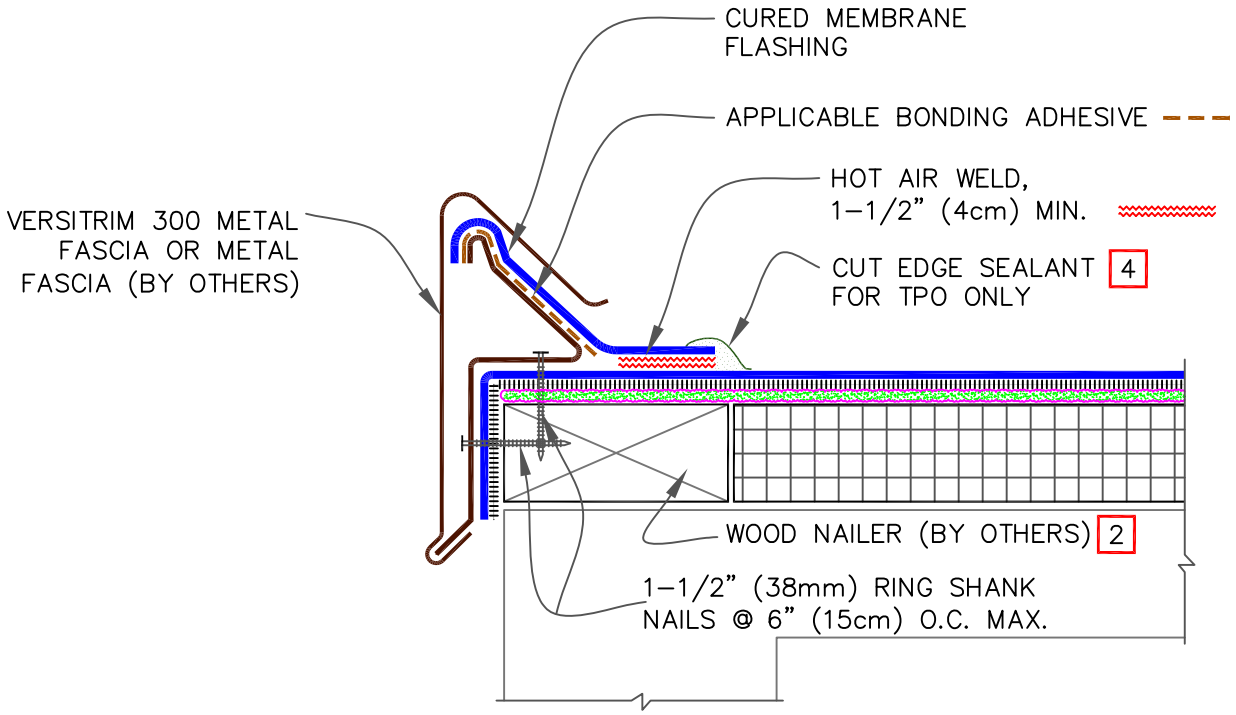

NOTES:

1. REFER TO VERSITRIM 300 INSTALLATION INSTRUCTION MANUAL FOR STEP–BY–STEP INSTALLATION PROCEDURES.
2. WOOD NAILER MUST EXTEND PAST TOTAL WIDTH OF GRAVEL STOP DECK FLANGE.
3. WHEN METAL FASCIA BY OTHERS IS USED, FASTENER TYPE AND FASTENING FREQUENCY SHALL BE RECOMMENDED BY METAL EDGE MANUFACTURER.
4. APPROXIMATELY 1/8" (0.5cm) DIAMETER BEAD OF CUT–EDGE SEALANT IS REQUIRED ON CUT EDGES OF REINFORCED TPO MEMBRANE.

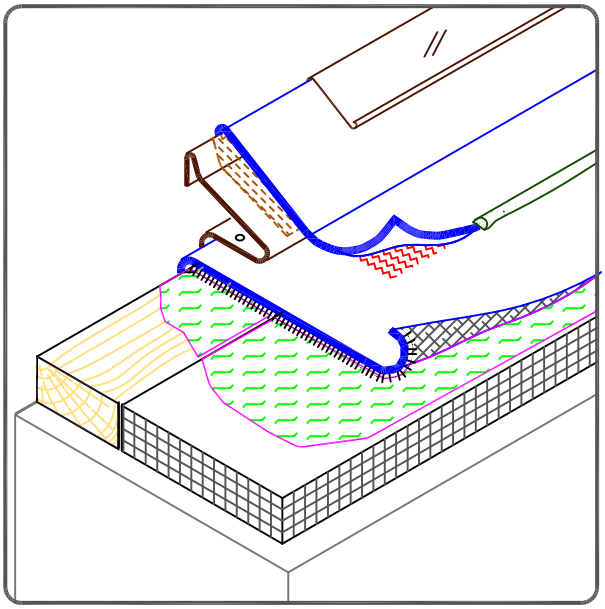

VERSICO ROOFING SYSTEMS

© 2024 VERSICO

VERSITRIM 300

→ VERSIFLEECE MEMBRANE
→ FLEXIBLE DASH
→ APPROVED SUBSTRATE
0 → SEE NOTE(S)

THERMOPLASTIC VERSIFLEECE ADHERED

VF–1.5A

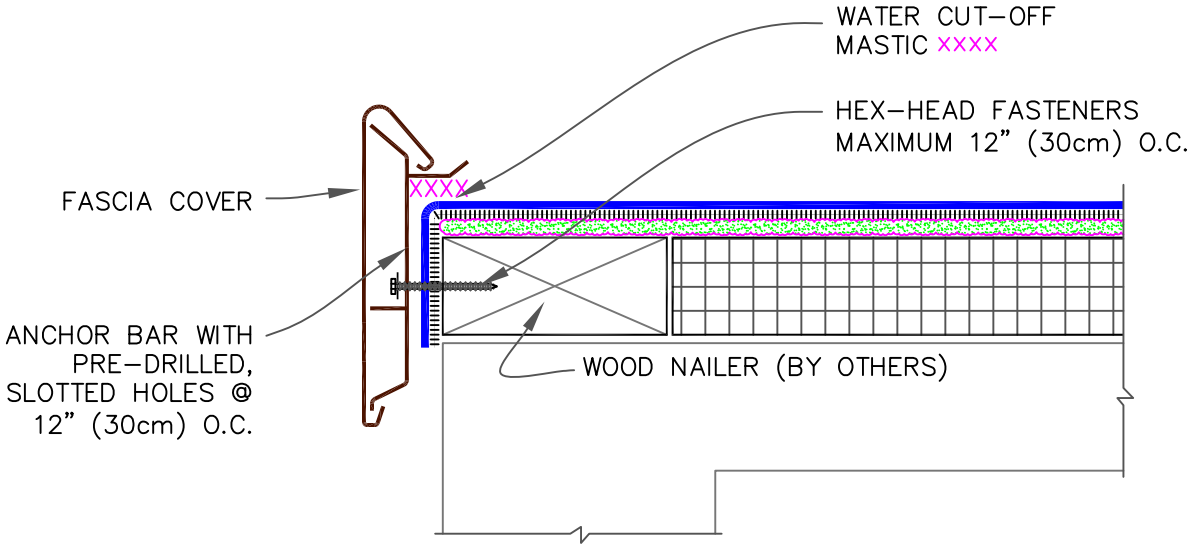

VERSITRIM 2000

NOTES:

1. REFER TO VERSITRIM 2000 OR 3000 INSTRUCTION MANUALS FOR THE STEP BY STEP INSTALLATION PROCEDURES.
2. IF INCIDENTAL/TEMPORARY PONDED WATER IS EXPECTED, THE VERSITRIM MUST BE ELEVATED AND SCUPPERS PROVIDED FOR DRAINAGE.
3. ENSURE ROOF SLOPES AWAY FROM VERSITRIM.

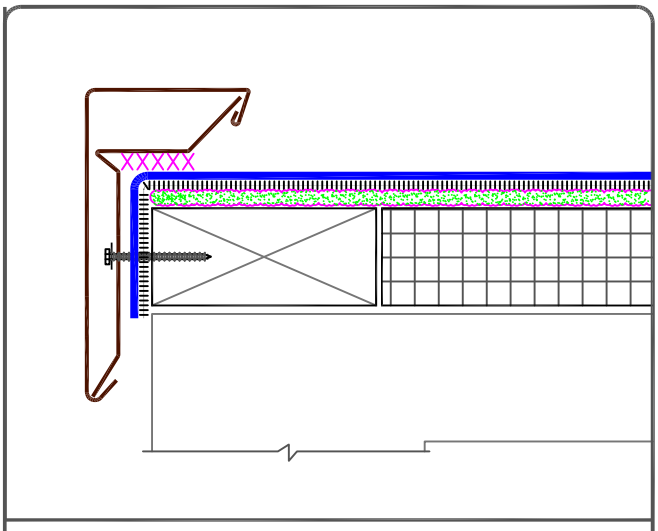

VERSITRIM 3000 (OPTION)

MEMBRANE SPLICE

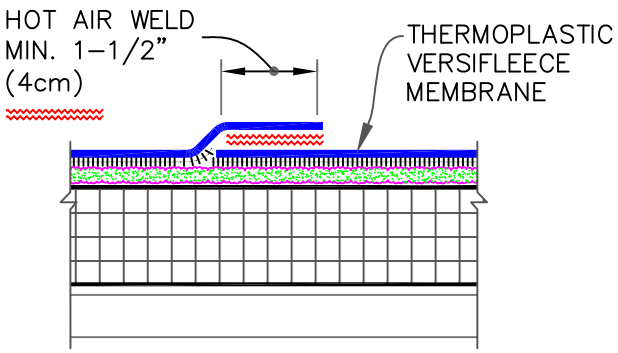

DIMENSION		cm	
A	2–1/4"	6	

END LAP SPLICE

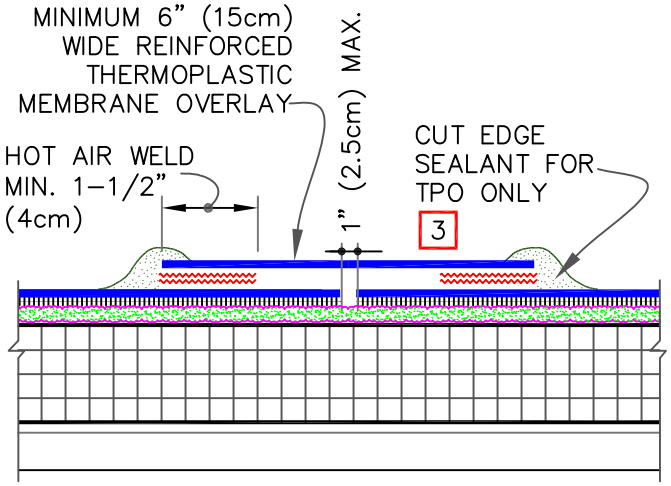

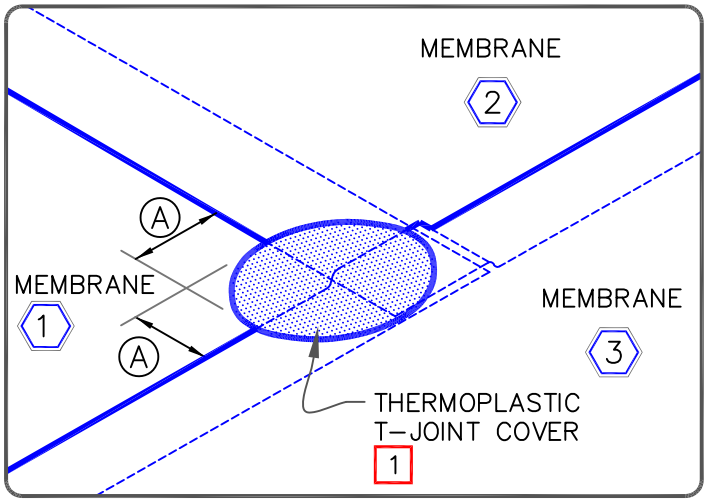

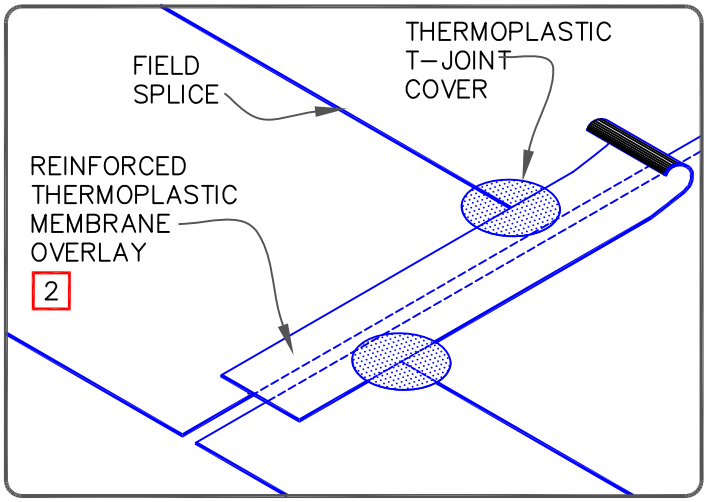

NOTES:

1. WHEN USING 115 OR 135–MIL TPO VERSIFLEECE OR 115 OR 135 PVC VERSIFLEECE MEMBRANE, APPLY A 4–1/2" (11cm) DIAMETER THERMOPLASTIC "T–JOINT" COVER AT ALL FIELD SPLICE INTERSECTIONS.
2. WHEN USING 60 OR 80 MIL THERMOPLASTIC REINFORCED MEMBRANE OVERLAY, INTERSECTIONS BETWEEN SPLICES MUST BE OVERLAID WITH A 4–1/2" (11cm) DIAMETER THERMOPLASTIC "T–JOINT" COVER.
3. APPROXIMATELY 1/8" (0.5cm) DIAMETER BEAD OF CUT–EDGE SEALANT IS REQUIRED ON CUT EDGES OF REINFORCED TPO MEMBRANE.
4. WHEN USING 115–MIL TPO VERSIFLEECE, MAXIMUM WARRANTY IS 20 YEARS

VERSICO ROOFING SYSTEMS
© 2024 VERSICO

THERMOPLASTIC MEMBRANE SPLICES

→ VERSIFLEECE MEMBRANE
→ FLEXIBLE DASH
→ APPROVED SUBSTRATE
0 → SEE NOTE(S)

THERMOPLASTIC VERSIFLEECE ADHERED

VF–2.2A

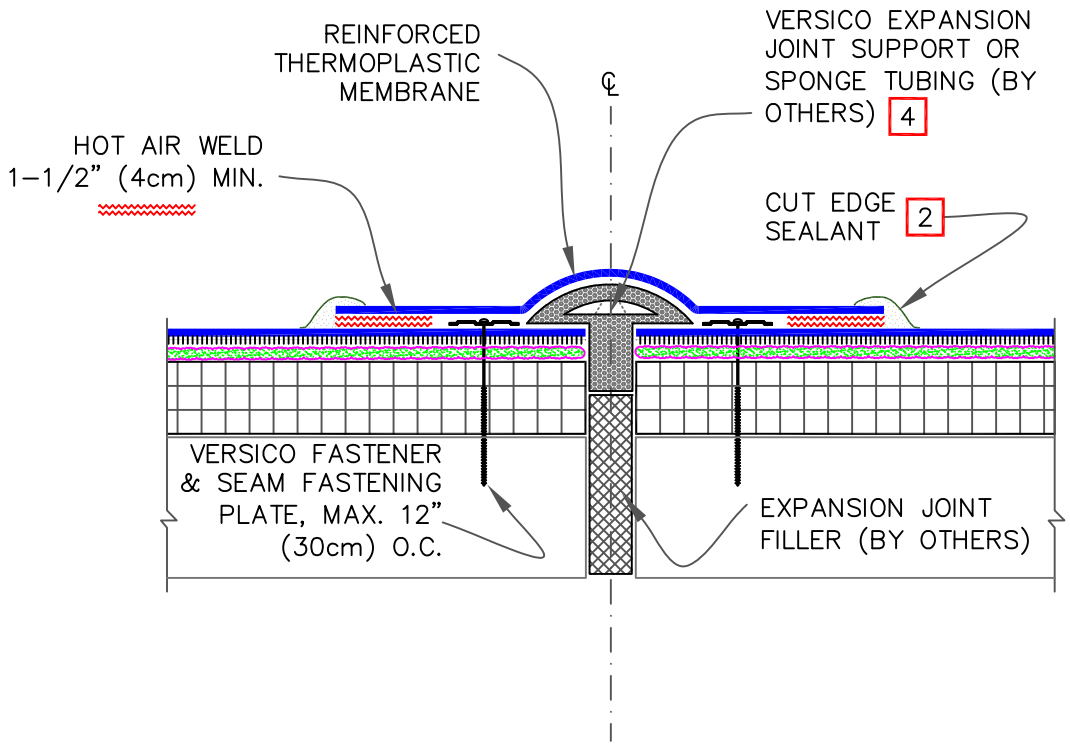

NOTES:

1. WHEN VERSICO EXPANSION JOINT SUPPORT IS USED, WIDTH OF JOINT SHALL BE A MINIMUM OF 3/4" (2cm) AND SHALL NOT EXCEED 3" (7.5cm).
2. APPROXIMATELY 1/8" (0.5cm) DIAMETER BEAD OF CUT–EDGE SEALANT IS REQUIRED ON CUT EDGES OF REINFORCED TPO MEMBRANE.
3. WHEN USING 60 OR 80 MIL REINFORCED THERMOPLASTIC MEMBRANE, APPLY A 4–1/2" (11cm) DIAMETER THERMOPLASTIC "T–JOINT" COVER AT ALL FIELD SPLICE INTERSECTIONS.
4. ROOF MEMBRANE SHALL <u>NOT</u> BE ADHERED OVER THE EXPANSION JOINT SUPPORT OR SPONGE TUBING.

VERSICO ROOFING SYSTEMS

© 2024 VERSICO

DECK–TO–DECK EXPANSION JOINT

→ VERSIFLEECE MEMBRANE
→ FLEXIBLE DASH
→ APPROVED SUBSTRATE
0 → SEE NOTE(S)

THERMOPLASTIC VERSIFLEECE ADHERED

VF–3.1A

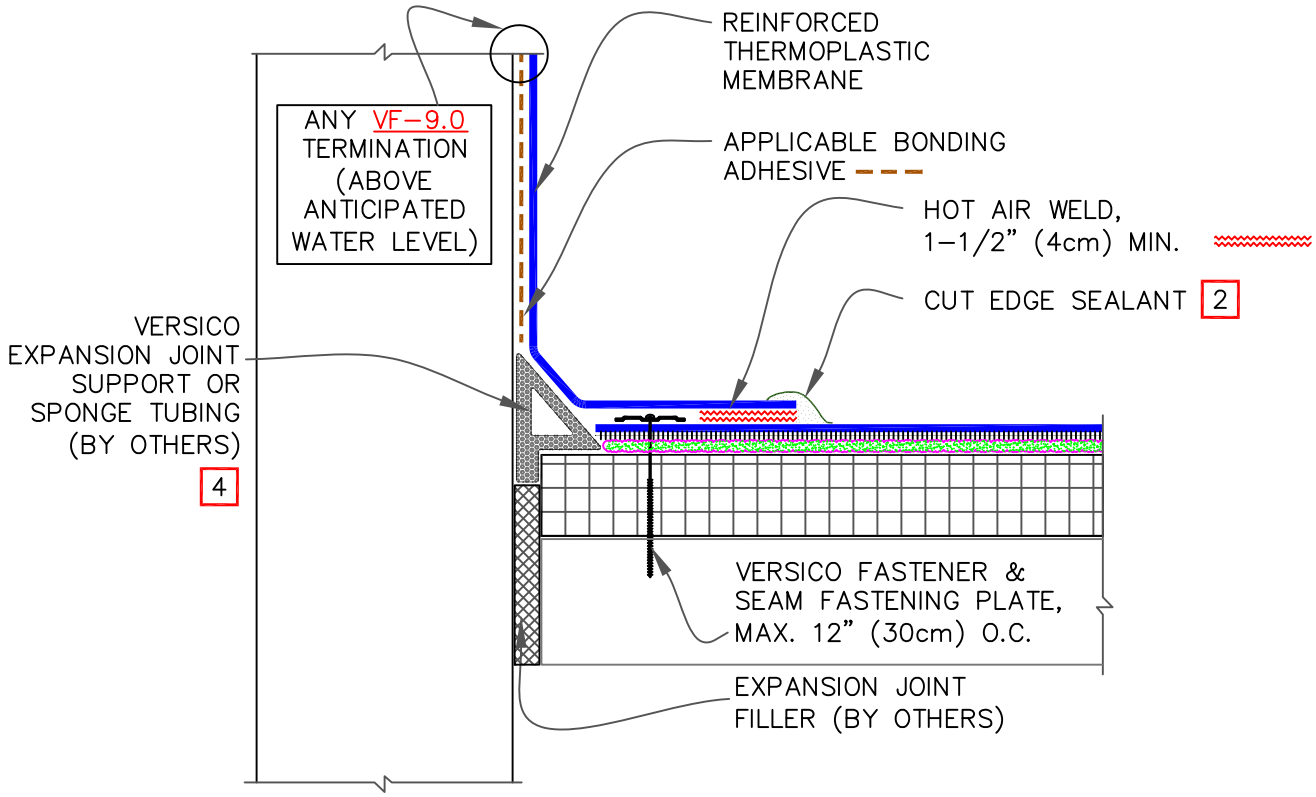

NOTES:

1. WHEN VERSICO EXPANSION JOINT SUPPORT IS USED, WIDTH OF JOINT SHALL BE A MINIMUM OF 3/4" (2cm) AND SHALL NOT EXCEED 2" (5cm).
2. APPROXIMATELY 1/8" (0.5cm) DIAMETER BEAD OF CUT–EDGE SEALANT IS REQUIRED ON CUT EDGES OF REINFORCED TPO MEMBRANE.
3. WHEN USING 60 OR 80 MIL REINFORCED THERMOPLASTIC MEMBRANE, APPLY A 4–1/2" (11cm) DIAMETER THERMOPLASTIC "T–JOINT" COVER AT ALL FIELD SPLICE INTERSECTIONS.
4. ROOF MEMBRANE SHALL NOT BE ADHERED OVER THE EXPANSION JOINT SUPPORT OR SPONGE TUBING.

VERSICO ROOFING SYSTEMS
© 2024 VERSICO

DECK–TO–WALL EXPANSION DETAIL

→ VERSIFLEECE MEMBRANE
→ FLEXIBLE DASH
→ APPROVED SUBSTRATE
0 → SEE NOTE(S)

THERMOPLASTIC VERSIFLEECE ADHERED

VF–3.2A

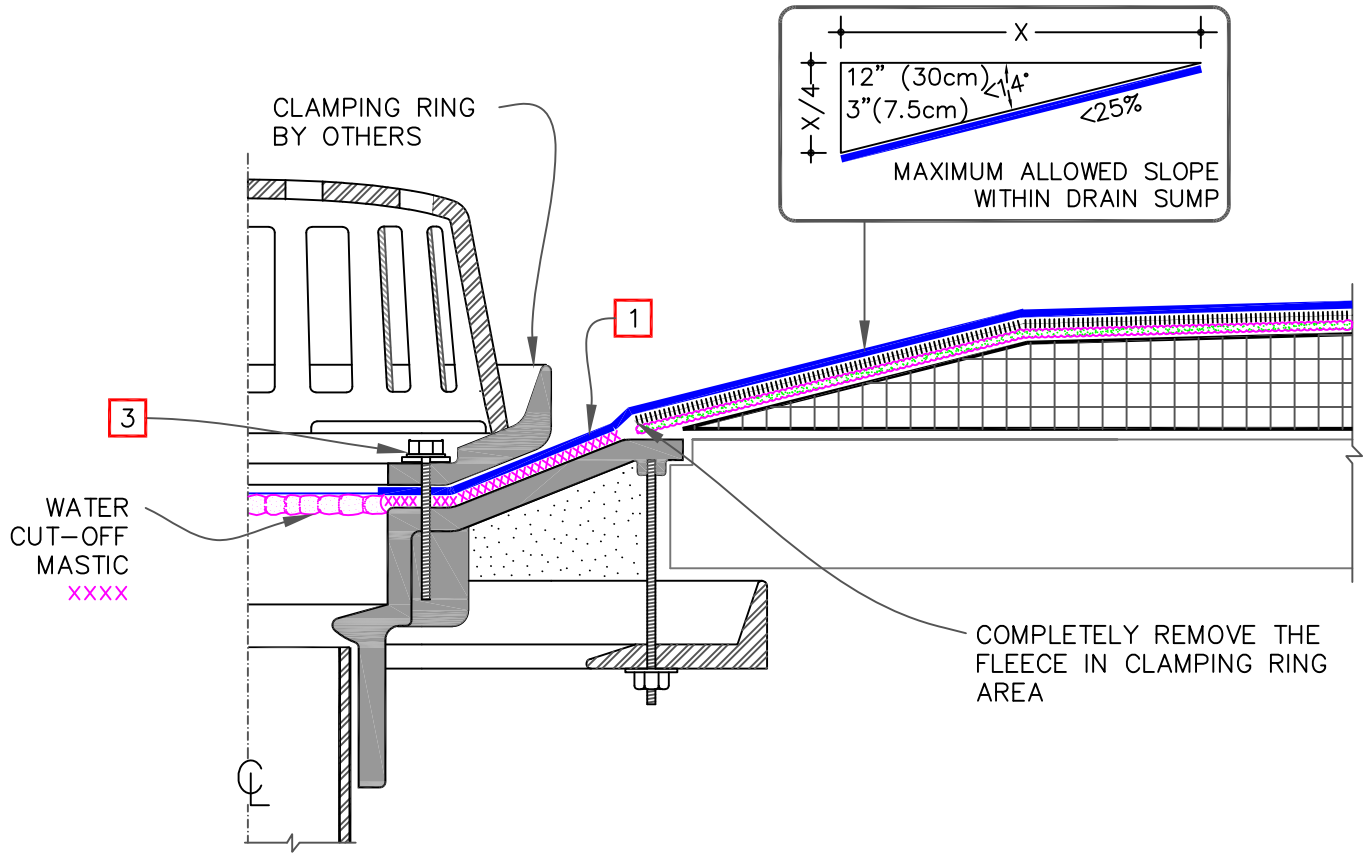

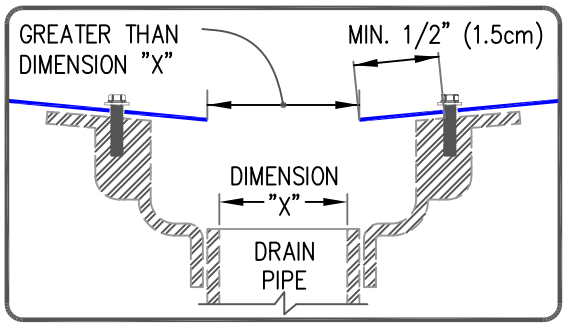

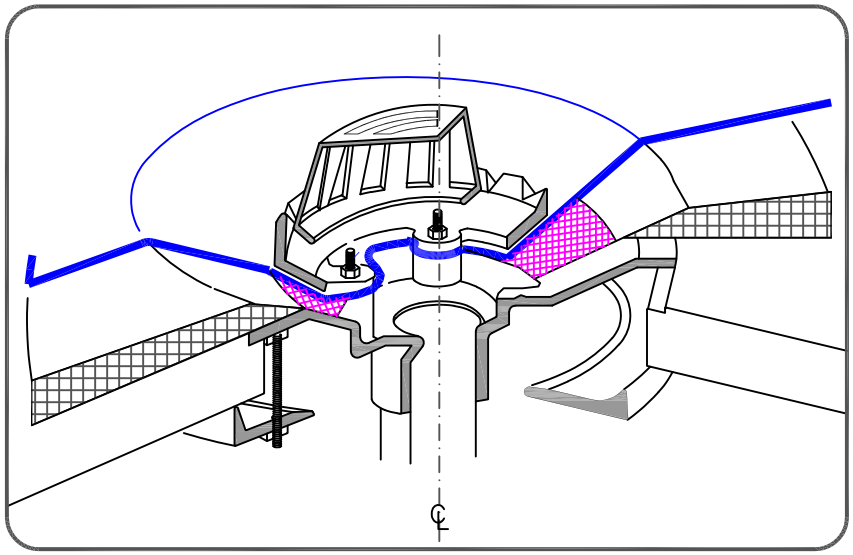

NOTES:

1. REMOVE EXISTING LEAD, FLASHING MATERIAL & ENSURE THE DRAIN RING IS COMPLETELY CLEAN DOWN TO BARE METAL.
2. FLEECE-BACKING MUST BE REMOVED FROM THE MEMBRANE SO THAT WATER CUT-OFF MASTIC IS IN DIRECT CONTACT.
3. ALL BOLTS OR CLAMPS MUST BE IN PLACE TO PROVIDE CONSTANT COMPRESSION ON WATER CUT-OFF MASTIC.
4. ROOF DRAIN SIZE AND NUMBER OF DRAINS SHALL BE IN ACCORDANCE WITH THE LOCAL CODES.
5. REMOVE EXISTING LEAD, FLASHING MATERIAL & ENSURE THE DRAIN RING IS COMPLETELY CLEAN DOWN TO BARE METAL.

VERSICO ROOFING SYSTEMS

© 2024 VERSICO

ROOF DRAIN WITH CONTINUOUS MEMBRANE

→ VERSIFLEECE MEMBRANE
→ FLEXIBLE DASH
→ APPROVED SUBSTRATE
0 → SEE NOTE(S)

THERMOPLASTIC VERSIFLEECE ADHERED

VF-6.1A

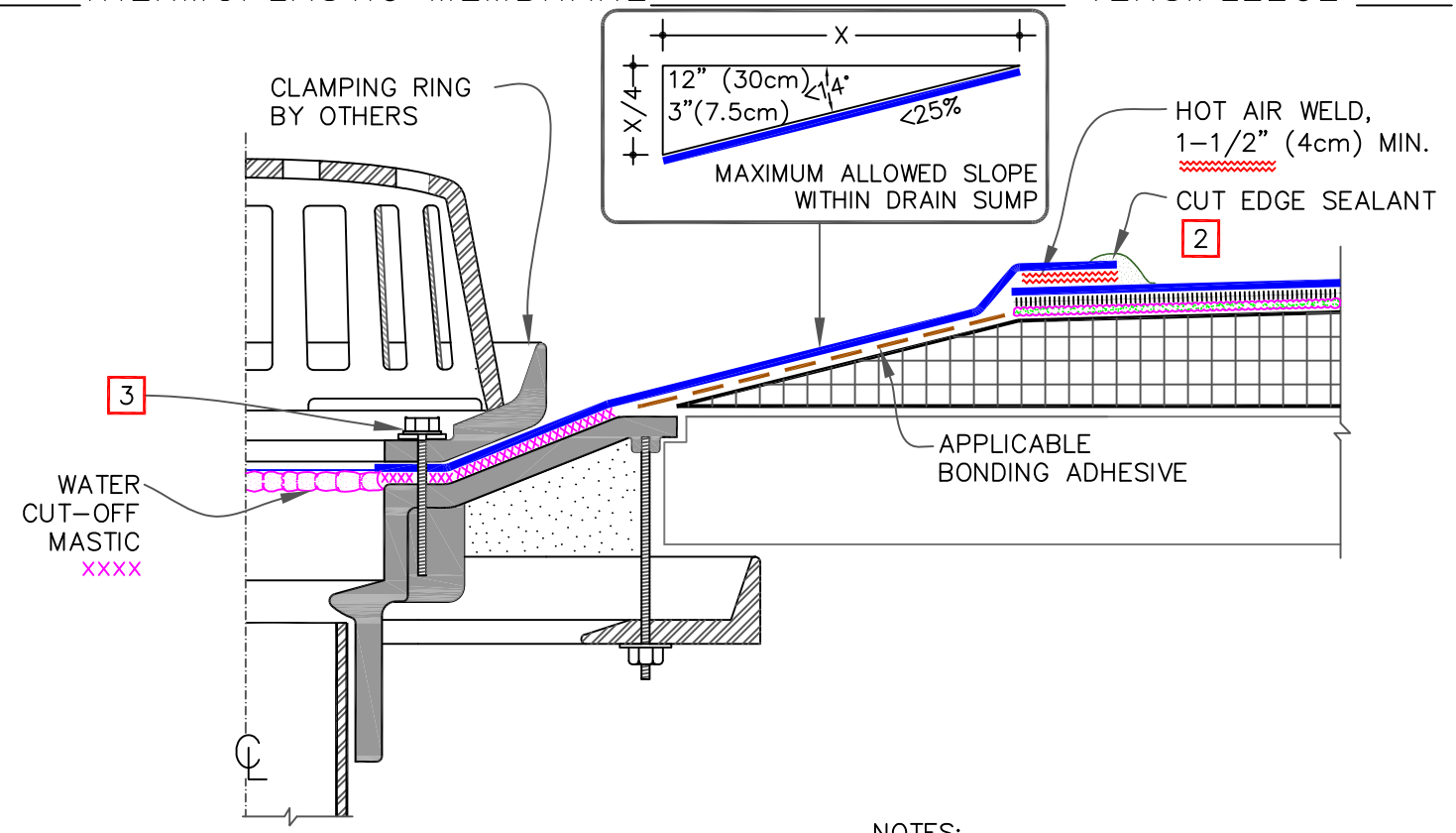

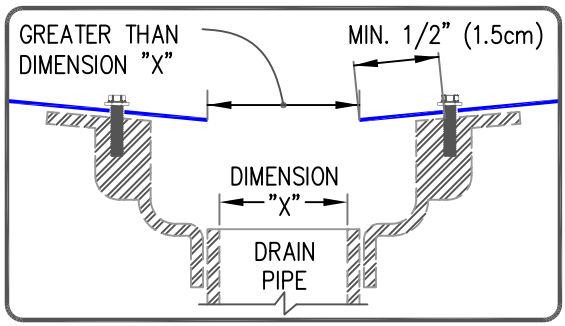

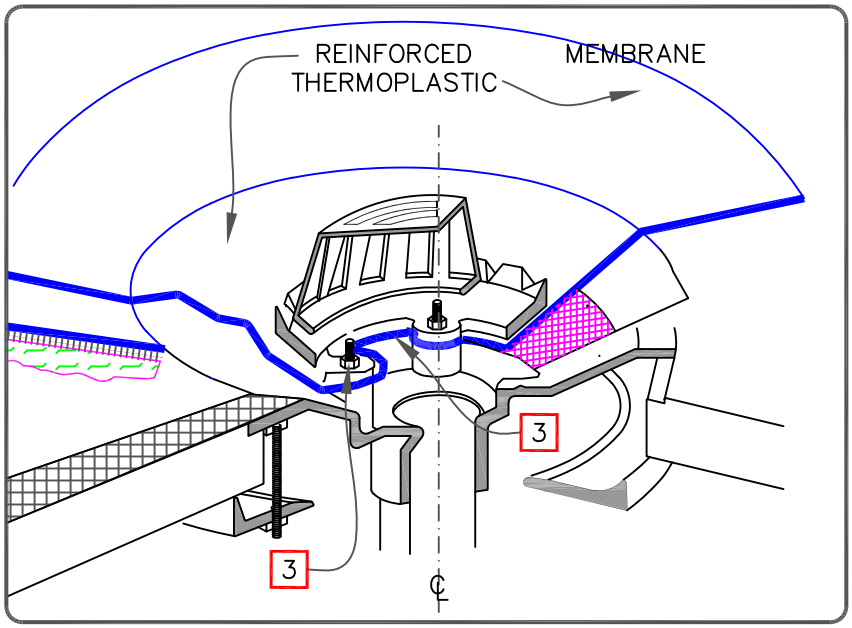

NOTES:

1. REMOVE EXISTING LEAD, FLASHING MATERIAL & ENSURE THE DRAIN RING IS COMPLETELY CLEAN DOWN TO BARE METAL.
2. APPROXIMATELY 1/8" (0.5cm) DIAMETER BEAD OF CUT-EDGE SEALANT IS REQUIRED ON CUT EDGES OF REINFORCED TPO MEMBRANE.
3. ALL BOLTS OR CLAMPS MUST BE IN PLACE TO PROVIDE CONSTANT COMPRESSION ON WATER CUT-OFF MASTIC.
4. ROOF DRAIN SIZE AND NUMBER OF DRAINS SHALL BE IN ACCORDANCE WITH THE LOCAL CODES.
5. FIELD SPLICES MUST BE LOCATED AT LEAST 6" (15cm) OUTSIDE OF THE DRAIN SUMP.
6. THE HOLE IN THE MEMBRANE SHALL EXCEED THE DIAMETER OF THE DRAIN PIPE, BUT SHALL BE NO LESS THAN 1/2" (1.5cm) FROM THE ATTACHMENT POINTS OF THE DRAIN CLAMPING RING

VERSICO ROOFING SYSTEMS

© 2024 VERSICO

ROOF DRAIN WITH SEPARATE TARGET SPLICE

→ VERSIFLEECE MEMBRANE
→ FLEXIBLE DASH
→ APPROVED SUBSTRATE
0 → SEE NOTE(S)

THERMOPLASTIC VERSIFLEECE ADHERED

VF-6.2A

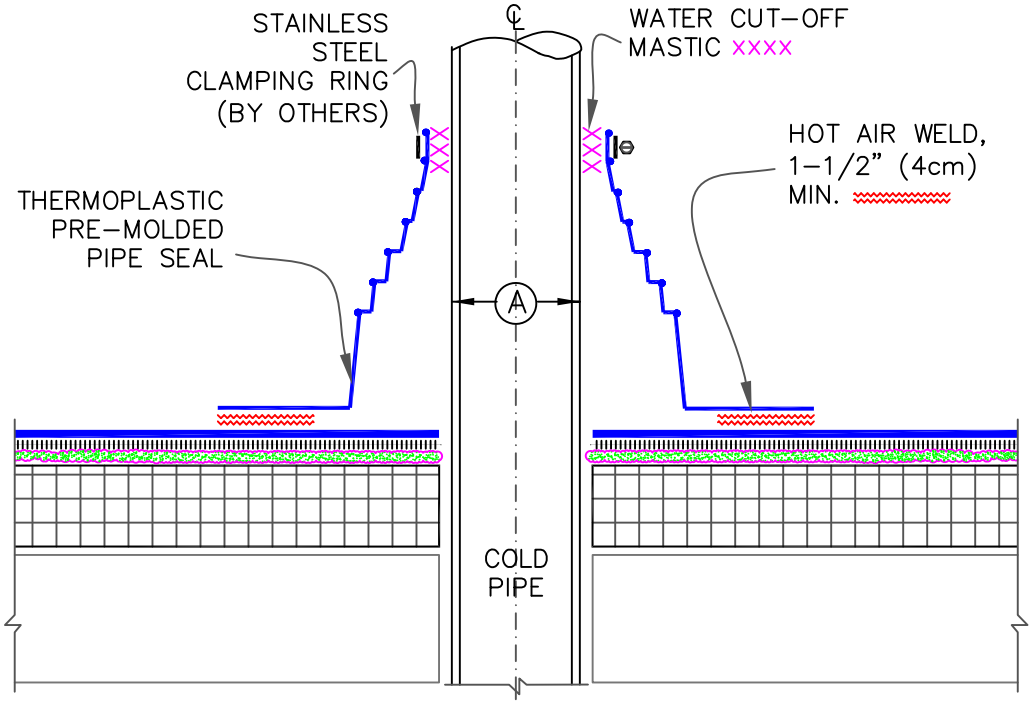

DIMENSIONS		cm	
A	3/4"	2	TO
	8"	20	

NOTES:

1. REMOVE ALL LEAD AND OTHER FLASHING BEFORE INSTALLING PRE-MOLDED PIPE SEAL.
2. TEMPERATURE OF THE PIPE PENETRATION MUST NOT EXCEED 140°F (60°C) WHEN USING PVC AND 160°F (71°C) WHEN USING TPO FLASHING.
3. PRE-MOLDED PIPE SEAL MUST HAVE INTACT RIB AT TOP EDGE, REGARDLESS OF PIPE DIAMETER.
4. DECK FLANGES OF THE PRE-MOLDED PIPE SEAL SHALL NOT BE OVERLAPPED, CUT OR APPLIED OVER ANY ANGLE CHANGE.

VERSICO ROOFING SYSTEMS
© 2024 VERSICO

PRE-MOLDED PIPE SEAL

→ VERSIFLEECE MEMBRANE
→ FLEXIBLE DASH
→ APPROVED SUBSTRATE
0 → SEE NOTE(S)

THERMOPLASTIC VERSIFLEECE ADHERED

VF-8.1A

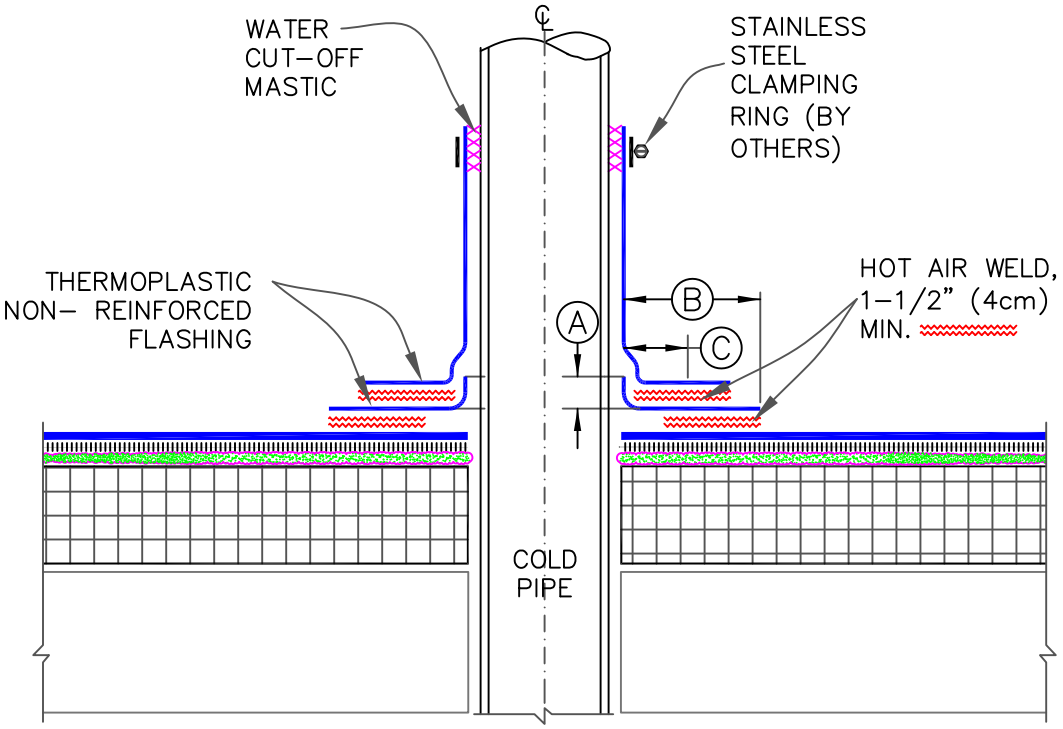

DIMENSIONS		cm	
A	1/2"	1.5	MIN.
B	1–1/2"	4	TO
	2"	5	
C	1"	2.5	MIN.

NOTES:

1. REMOVE ALL LEAD AND OTHER FLASHING BEFORE INSTALLING FIELD FABRICATED PIPE SEAL.
2. TEMPERATURE OF THE PIPE PENETRATION MUST NOT EXCEED 140°F (60°C) WHEN USING PVC AND 160°F (71°C) WHEN USING TPO FLASHING.
3. APPLY HEAT TO FLASHING AND FORM BY HAND PRIOR TO HOT AIR WELDING
4. MECHANICAL SECUREMENT IS REQUIRED AROUND ALL PIPES GREATER THAN 18" (46cm) IN DIAMETER.
5. REFER TO THERMOPLASTIC COMMON DETAILS FOR HOT STACK, STEEL TUBING & FLEXIBLE PENETRATIONS.

VERSICO ROOFING SYSTEMS
© 2024 VERSICO

FIELD FABRICATED PIPE FLASHING

→ VERSIFLEECE MEMBRANE
→ FLEXIBLE DASH
→ APPROVED SUBSTRATE
0 → SEE NOTE(S)

THERMOPLASTIC VERSIFLEECE ADHERED

VF–8.2A

9A MECHANICAL TERMINATION WITH COUNTER FLASHING

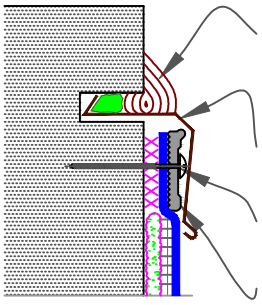

VERSICO UNIVERSAL SINGLE-PLY SEALANT OR SEALANT (BY OTHERS)

METAL COUNTER-FLASHING WITH LEAD WEDGES, AS REQUIRED (BY OTHERS).

THREADED FASTENERS OR VERSICO HP TERM BAR NAIL-IN

VERSICO TERMINATION BAR

WARRANTY UP TO 30 YEARS | **SEE INSET A**

9B MECHANICAL TERMINATION

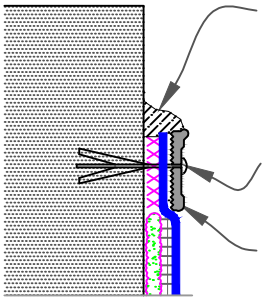

VERSICO UNIVERSAL SINGLE-PLY SEALANT OR SEALANT (BY OTHERS)

VERSICO ZINC NAIL-IN ANCHOR RECOMMENDED @ 6" (15cm) O.C.

VERSICO TERMINATION BAR

WARRANTY UP TO 20 YEARS | **SEE INSET A**

INSET A

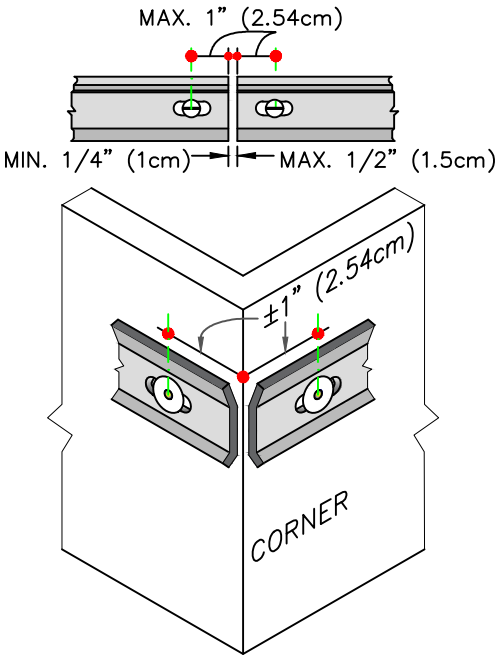

NOTES:

1. APPLY ON HARD SMOOTH SURFACE ONLY; NOT FOR USE ON EXPOSED WOOD.
2. DO NOT WRAP TERMINATION BAR AROUND CORNERS.
3. DETAIL 9D ON PAGE 2 OF 3 MUST BE USED AT VERTICAL JOINTS IN PANEL WALLS.

9C COUNTER FLASHING TERMINATION

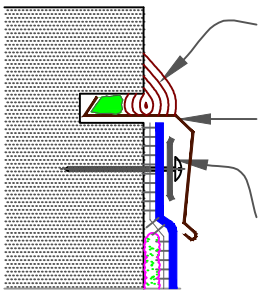

VERSICO UNIVERSAL SINGLE-PLY SEALANT OR SEALANT (BY OTHERS)

METAL COUNTER-FLASHING WITH LEAD WEDGES, AS REQUIRED (BY OTHERS).

FASTEN MEMBRANE @ 12" (30cm) O.C. MAX. USE GALVANIZED WASHERS, MIN. 1", (2.54cm) DIAMETER

NOTE:

1. WHEN MECHANICAL FASTENERS ARE USED TO PENETRATE THE METAL COUNTER-FLASHING, USE EPDM WASHERS, APPLY WATER CUT-OFF MASTIC UNDER THE COUNTER-FLASHING OR CAULK THE FASTENER HEADS.

WARRANTY UP TO 10 YEARS

XXX WATER CUT-OFF MASTIC- MUST BE HELD UNDER CONSTANT COMPRESSION.

VERSICO ROOFING SYSTEMS

© 2024 VERSICO

MEMBRANE TERMINATIONS (PAGE 1 OF 3)

- VERSIFLEECE MEMBRANE
- FLEXIBLE DASH
- APPROVED SUBSTRATE
- 0 SEE NOTE(S)

THERMOPLASTIC VERSIFLEECE ADHERED

VF-9.0

9D	MECHANICAL TERMINATION AT VERTICAL JOINTS

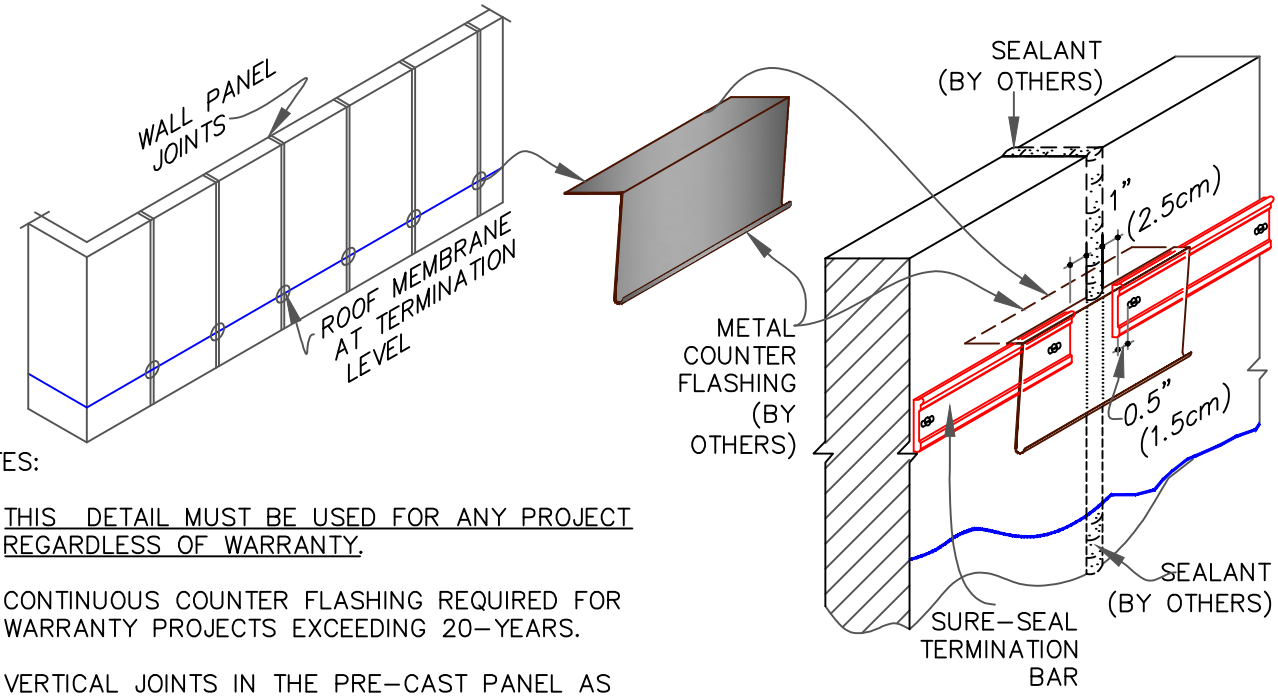

NOTES:

1. THIS DETAIL MUST BE USED FOR ANY PROJECT REGARDLESS OF WARRANTY.
2. CONTINUOUS COUNTER FLASHING REQUIRED FOR WARRANTY PROJECTS EXCEEDING 20-YEARS.
3. VERTICAL JOINTS IN THE PRE-CAST PANEL AS WELL AS ALL GAPS AT THE JUNCTION OF THE TILT-UP PANEL AND ROOF DECK MUST BE FULLY SEALED TO PREVENT AIR INFILTRATION.
4. APPLY ON HARD SMOOTH SURFACE ONLY.

9E	SecurEdge 200 & 300 COPINGS

NOTES:

1. MEMBRANE MUST BE EXTENDED AT CORNERS TO PROVIDE COMPLETE COVERAGE OF THE TOP WALL SURFACE. SEE 9F ON PAGE 3 OF 3.
2. REFER TO VERSITRIM COPING INSTALLATION INSTRUCTION MANUAL FOR STEP-BY-STEP INSTRUCTION PROCEDURES.
3. STOP ADHESIVE AT APPROPRIATE DISTANCE TO AVOID STAINING ON EXTERIOR FACE OF WALL. EXTEND THE MEMBRANE DOWN & TEMPORARILY SECURE WITH CAPPED NAILS AT 12" (30.5cm) O.C. ENSURE SEAMS ARE SEALED.

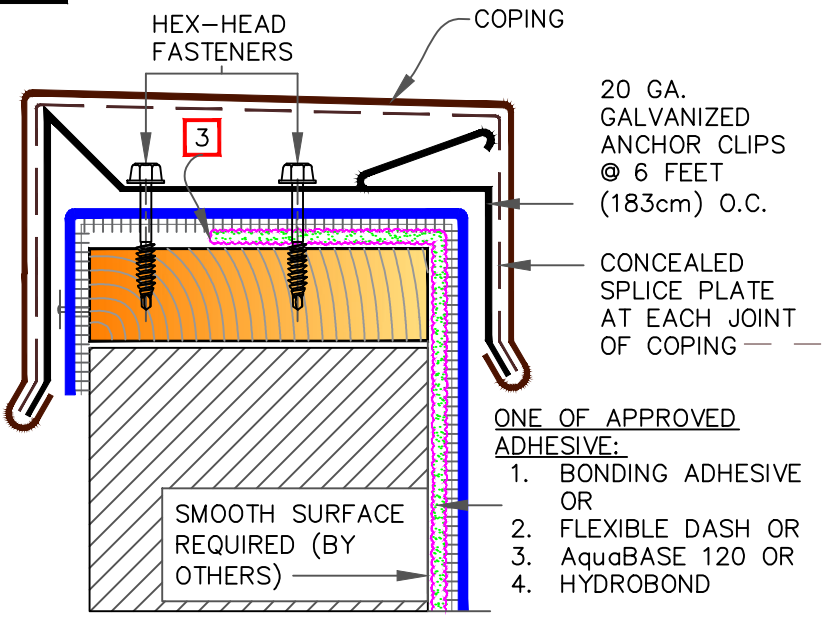

© 2024 VERSICO

MEMBRANE TERMINATIONS (PAGE 2 OF 3)

VERSIFLEECE MEMBRANE
FLEXIBLE DASH
APPROVED SUBSTRATE
0 SEE NOTE(S)

THERMOPLASTIC VERSIFLEECE ADHERED

VF-9.0

9F SHEET METAL COPING (BY OTHERS)

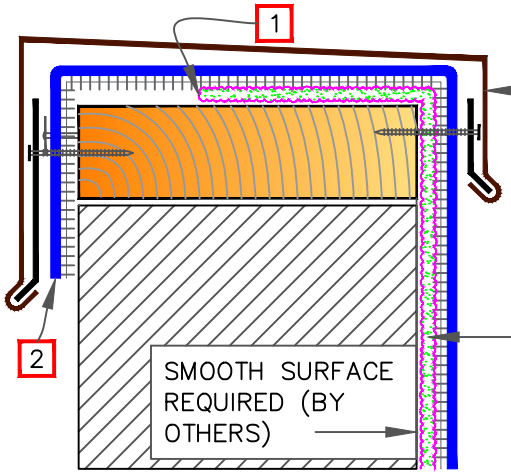

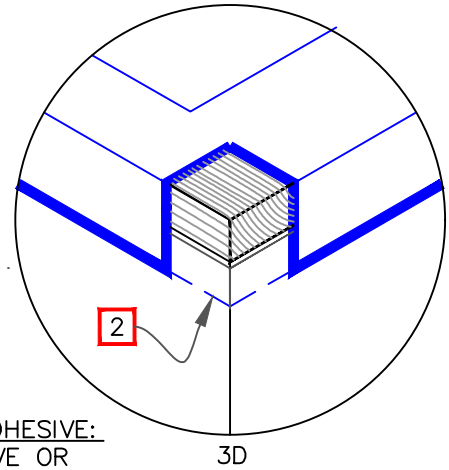

ONE OF APPROVED ADHESIVE:
1. BONDING ADHESIVE OR
2. FLEXIBLE DASH OR
3. AquaBASE 120 OR
4. HYDROBOND

NOTES:

1. STOP ADHESIVE AT APPROPRIATE DISTANCE TO AVOID STAINING ON EXTERIOR FACE OF WALL. EXTEND THE MEMBRANE DOWN & SECURE WITH CAPPED NAILS AT 12" (30.5cm) O.C. ENSURE SEAMS ARE SEALED.

2. EXTEND THE MEMBRANE BELOW THE JOINT. AT CORNERS, MEMBRANE MUST BE EXTENDED TO PROVIDE COMPLETE COVERAGE OF WALL SURFACE.

9G MASONRY COPINGS (BY OTHERS)

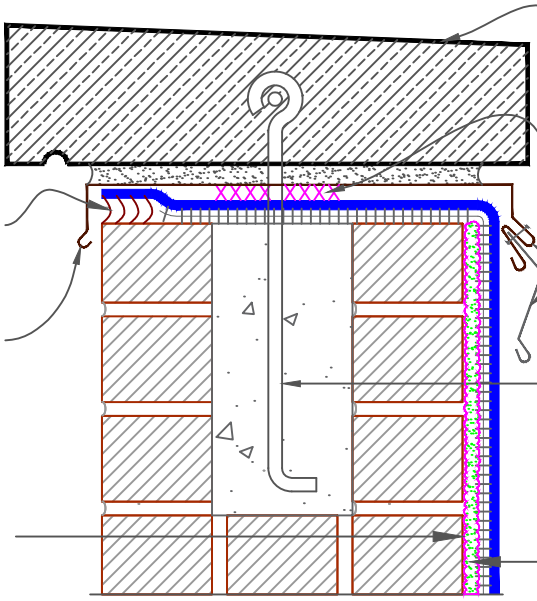

MASONRY COPING (BY OTHERS)

WATER CUT-OFF MASTIC AROUND DOWEL OR ANCHOR XXXX

APPROVED SEALANT UNDER THE MEMBRANE LIP

MAKE RECEIVER FOR FUTURE COUNTER FLASHING FOR FUTURE RE-ROOFING

SHEET METAL THROUGH-WALL FLASHING. BEND AND EXTEND DOWNWARD

DOWEL OR ANCHORAGE AS DESIGNED BY ARCHITECT/ STRUCTURAL ENGINEER (BY OTHERS)

SMOOTH SURFACE REQUIRED (BY OTHERS)

ONE OF APPROVED ADHESIVE:
1. BONDING ADHESIVE OR
2. FLEXIBLE DASH OR
3. AquaBASE 120 OR
4. HYDROBOND

XXX WATER CUT-OFF MASTIC- MUST BE HELD UNDER CONSTANT COMPRESSION.

VERSICO ROOFING SYSTEMS
© 2024 VERSICO

MEMBRANE TERMINATIONS (PAGE 3 OF 3)

VERSIFLEECE MEMBRANE
FLEXIBLE DASH
APPROVED SUBSTRATE
0 SEE NOTE(S)

THERMOPLASTIC VERSIFLEECE ADHERED

VF-9.0

CAUTION

REFER TO DETAIL VF-12.3 WHEN USING AQUA BASE 120 ADHESIVE.

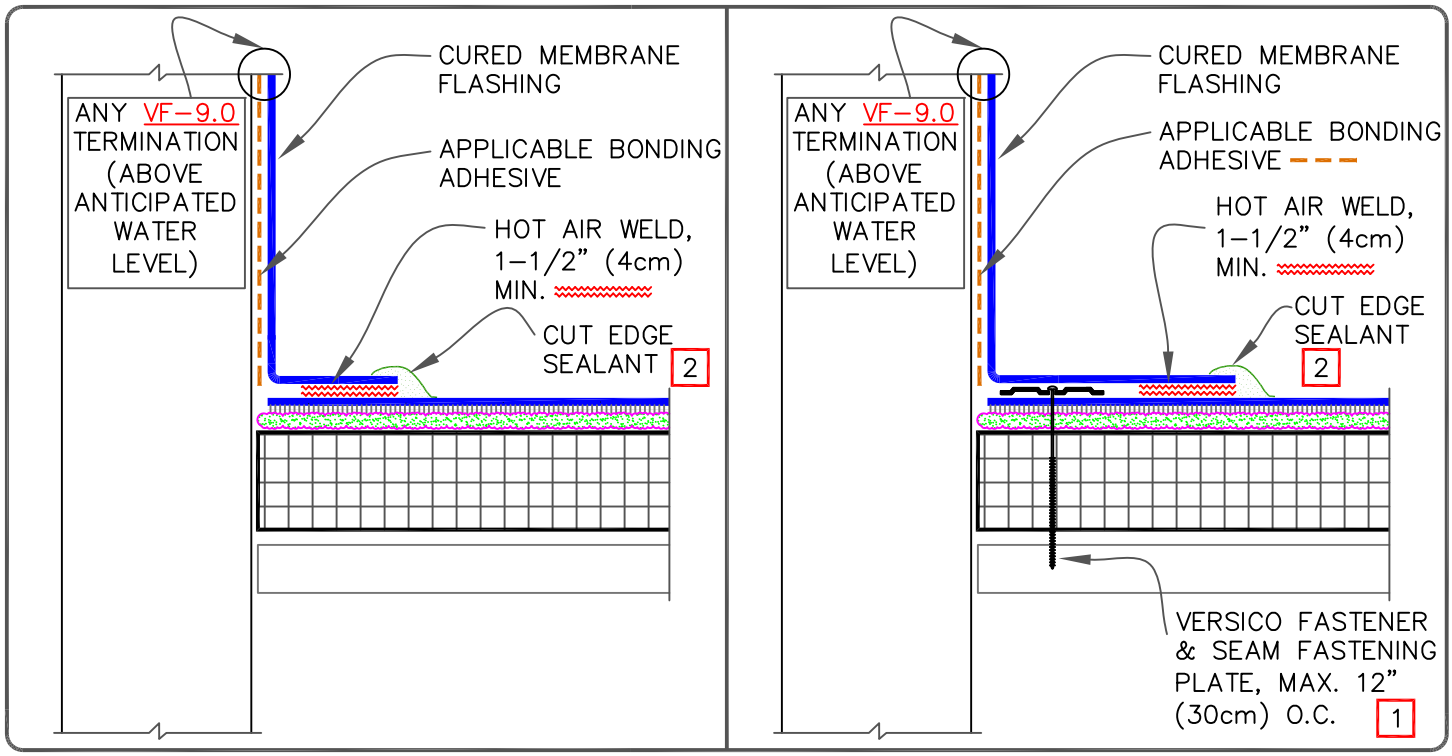

NOTES:

1. MECHANICALLY ATTACHED BASE SECUREMENT IS REQUIRED WHEN ANY ONE OF THE FOLLOWING MAY OCCUR:
   1.1. SPECIFIED WARRANTIES GREATER THAN 20-YEARS.
   1.2. WARRANTY WIND SPEEDS GREATER THAN 90MPH.
   1.3. PROJECTS WITH CONTROL OR EXPANSION JOINTS OR ANTICIPATED BUILDING MOVEMENT.
   1.4. WHEN VERSIFLEECE MEMBRANE IS INSTALLED DIRECTLY OVER AN EXISTING SINGLE-PLY ROOF.

2. APPROXIMATELY 1/8" (0.5cm) DIAMETER BEAD OF CUT-EDGE SEALANT IS REQUIRED ON CUT EDGES OF REINFORCED TPO MEMBRANE.

3. WHEN USING 60 OR 80-MIL REINFORCED THERMOPLASTIC MEMBRANE, APPLY A 4-1/2" (11cm) DIAMETER THERMOPLASTIC "T-JOINT" COVER AT ALL FIELD SPLICE INTERSECTIONS.

VERSICO ROOFING SYSTEMS

© 2024 VERSICO

PARAPET/CURB WITH SEPARATE MEMBRANE – FULL COVERAGE/SPLATTER

→ VERSIFLEECE MEMBRANE
→ AUQUA BASE 120/ HYDROBOND
→ APPROVED SUBSTRATE
0 → SEE NOTE(S)

VERSIFLEECE ADHERED

VF-12.1A

CAUTION

- REFER TO DETAIL VF–12.3 WHEN USING AQUA BASE 120 ADHESIVE OR HYDROBOND.

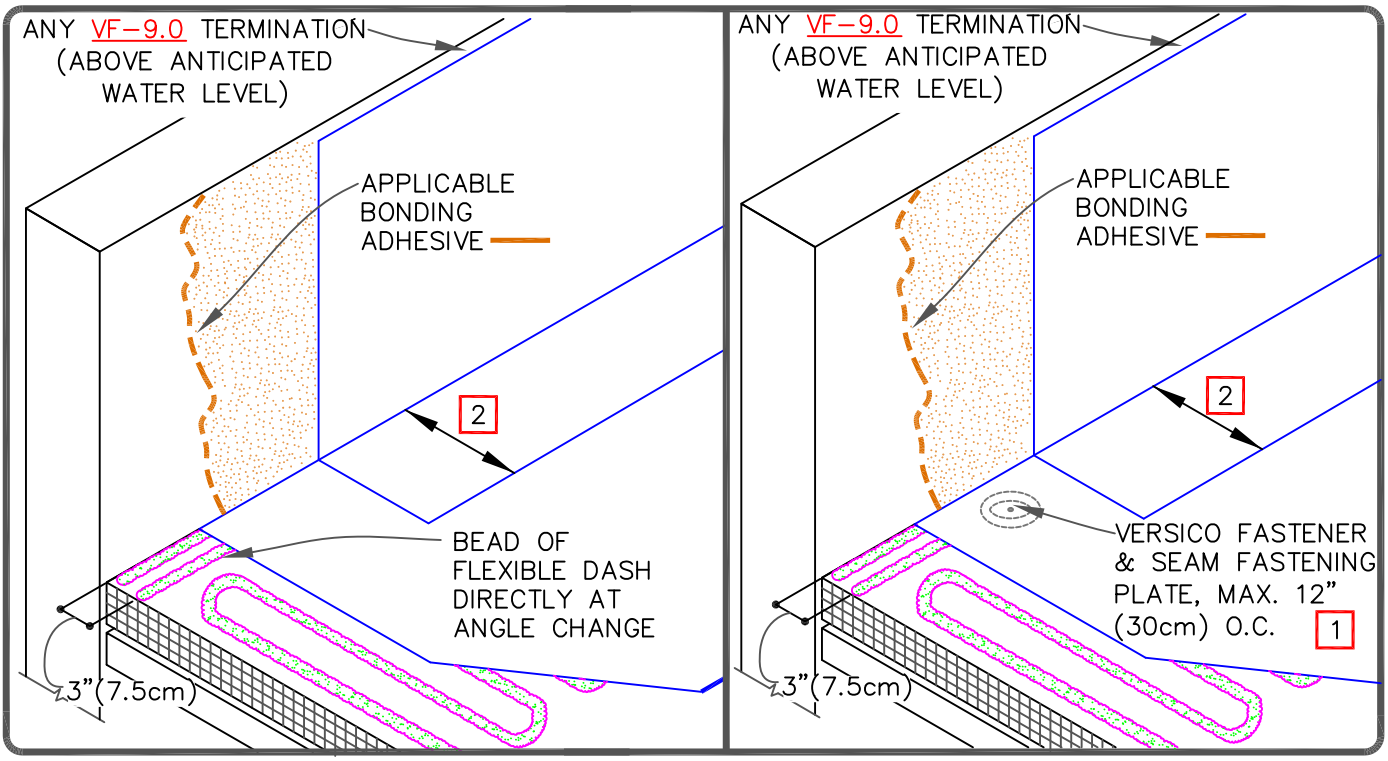

NOTES:

1. MECHANICALLY FASTENED BASE SECUREMENT IS REQUIRED WHEN ANY ONE OF THE FOLLOWING MAY OCCUR:
   1.1. SPECIFIED WARRANTIES GREATER THAN 20–YEARS.
   1.2. WARRANTY WIND SPEEDS GREATER THAN 90MPH.
   1.3. PROJECTS WITH CONTROL OR EXPANSION JOINTS OR ANTICIPATED BUILDING MOVEMENT.
   1.4. WHEN VERSIFLEECE MEMBRANE IS INSTALLED DIRECTLY OVER AN EXISTING SINGLE–PLY ROOF.

2. SPLICES SHALL BE COMPLETED USING MINIMUM 1–1/2" (4cm) HOT AIR WELD.

3. APPROXIMATELY 1/8" (0.5cm) DIAMETER BEAD OF CUT–EDGE SEALANT IS REQUIRED ON CUT EDGES OF REINFORCED TPO MEMBRANE.

4. WHEN USING 60 OR 80–MIL REINFORCED THERMOPLASTIC MEMBRANE FLASHING, APPLY A 4–1/2" (11cm) DIAMETER THERMOPLASTIC "T–JOINT" COVER AT ALL FIELD SPLICE INTERSECTIONS.

VERSICO ROOFING SYSTEMS
© 2024 VERSICO

PARAPET/CURB WITH SEPARATE MEMBRANE – BEAD APPLIED

→ VERSIFLEECE MEMBRANE
→ FLEXIBLE DASH
→ APPROVED SUBSTRATE
0 → SEE NOTE(S)

THERMOPLASTIC VERSIFLEECE ADHERED

VF–12.1B

CAUTION

REFER TO DETAIL VF–12C WHEN USING AQUA BASE 120 ADHESIVE OR HYDROBOND.

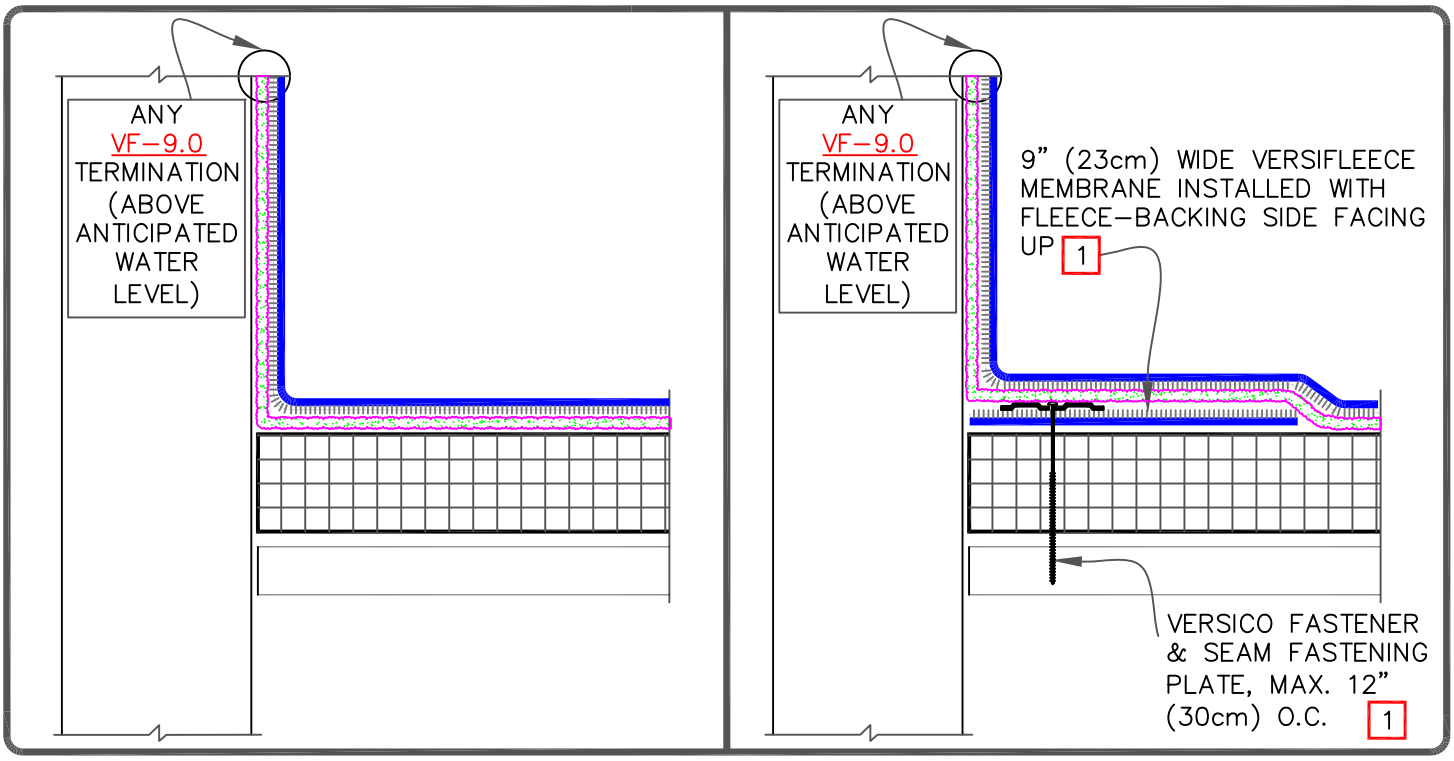

NOTES:

1. MECHANICALLY FASTENED BASE SECUREMENT IS REQUIRED WHEN ANY ONE OF THE FOLLOWING MAY OCCUR:
   1.1. SPECIFIED WARRANTIES GREATER THAN 20–YEARS.
   1.2. WARRANTY WIND SPEEDS GREATER THAN 90MPH.
   1.3. PROJECTS WITH CONTROL OR EXPANSION JOINTS OR ANTICIPATED BUILDING MOVEMENT.
   1.4. WHEN VERSIFLEECE MEMBRANE IS INSTALLED DIRECTLY OVER AN EXISTING SINGLE–PLY ROOF.

2. WHEN THE USE OF FLEXIBLE DASH (FULL SPRAY) IS NOT FEASIBLE ON THE VERTICAL SUBSTRATE, SEE APPROPRIATE TDB FOR INSTALLATION INSTRUCTIONS FOR BONDING ADHESIVE.

VERSICO ROOFING SYSTEMS

© 2024 VERSICO

PARAPET/CURB WITH CONTINUOUS MEMBRANE – FULL COVERAGE/SPLATTER

→ VERSIFLEECE MEMBRANE
→ FLEXIBLE DASH
→ APPROVED SUBSTRATE
0 → SEE NOTE(S)

THERMOPLASTIC VERSIFLEECE ADHERED

VF–12.2A

CAUTION

REFER TO DETAIL VF–12.3 WHEN USING AQUA BASE 120 ADHESIVE OR HYDROBOND.

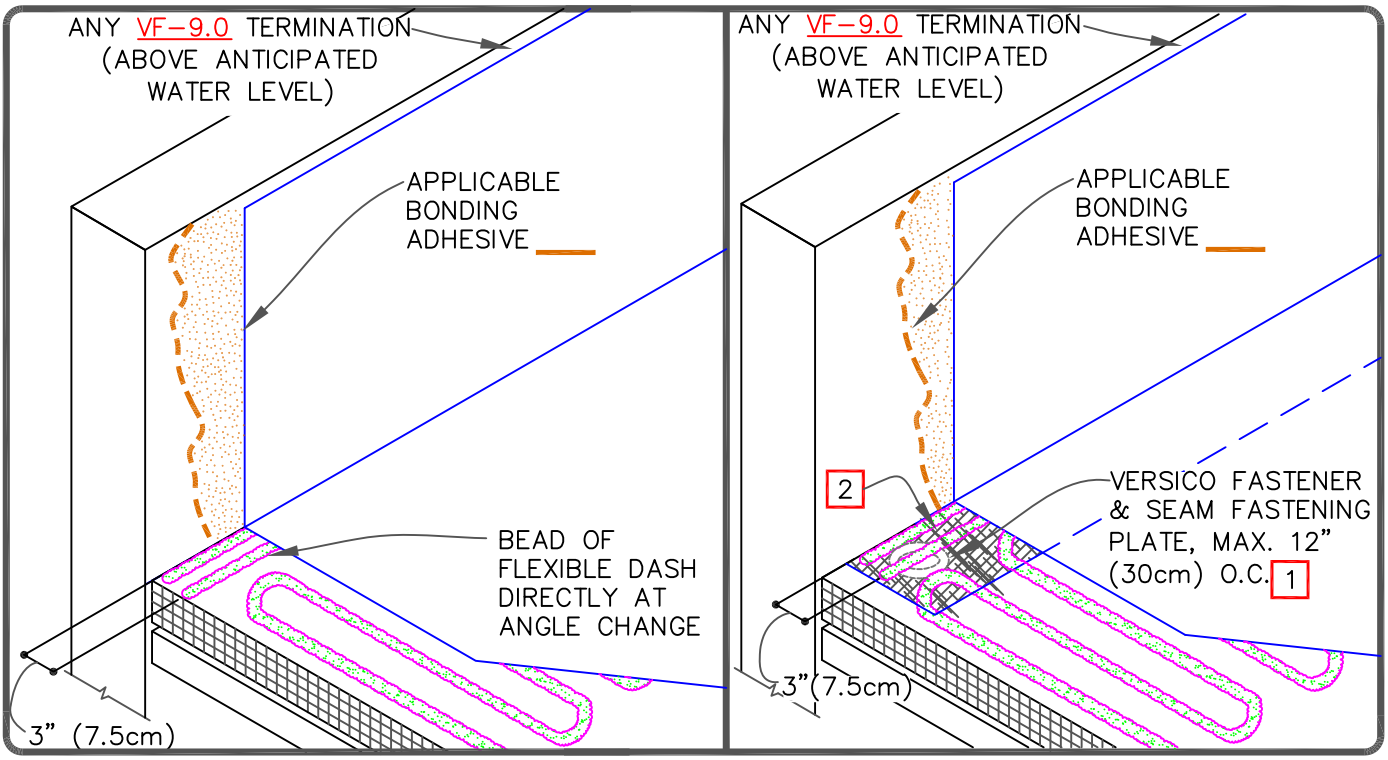

NOTES:

1. MECHANICALLY FASTENED BASE SECUREMENT IS REQUIRED WHEN ANY ONE OF THE FOLLOWING MAY OCCUR:
   1.1. SPECIFIED WARRANTIES GREATER THAN 20–YEARS.
   1.2. WARRANTY WIND SPEEDS GREATER THAN 90MPH.
   1.3. PROJECTS WITH CONTROL OR EXPANSION JOINTS OR ANTICIPATED BUILDING MOVEMENT.
   1.4. WHEN VERSIFLEECE MEMBRANE IS INSTALLED DIRECTLY OVER AN EXISTING SINGLE–PLY ROOF.

2. 9" (23cm) WIDE VERSIFLEECE MEMBRANE INSTALLED WITH FLEECE–BACKING SIDE FACING UP.

3. WHEN USING 60 OR 80–MIL REINFORCED THERMOPLASTIC MEMBRANE FLASHING, APPLY A 4–1/2" (11cm) DIAMETER THERMOPLASTIC "T–JOINT" COVER AT ALL FIELD SPLICE INTERSECTIONS.

VERSICO ROOFING SYSTEMS

© 2024 VERSICO

PARAPET/CURB WITH CONTINUOUS MEMBRANE – BEAD APPLIED

→ VERSIFLEECE MEMBRANE
→ FLEXIBLE DASH
→ APPROVED SUBSTRATE
0 → SEE NOTE(S)

THERMOPLASTIC VERSIFLEECE ADHERED

VF–12.2B

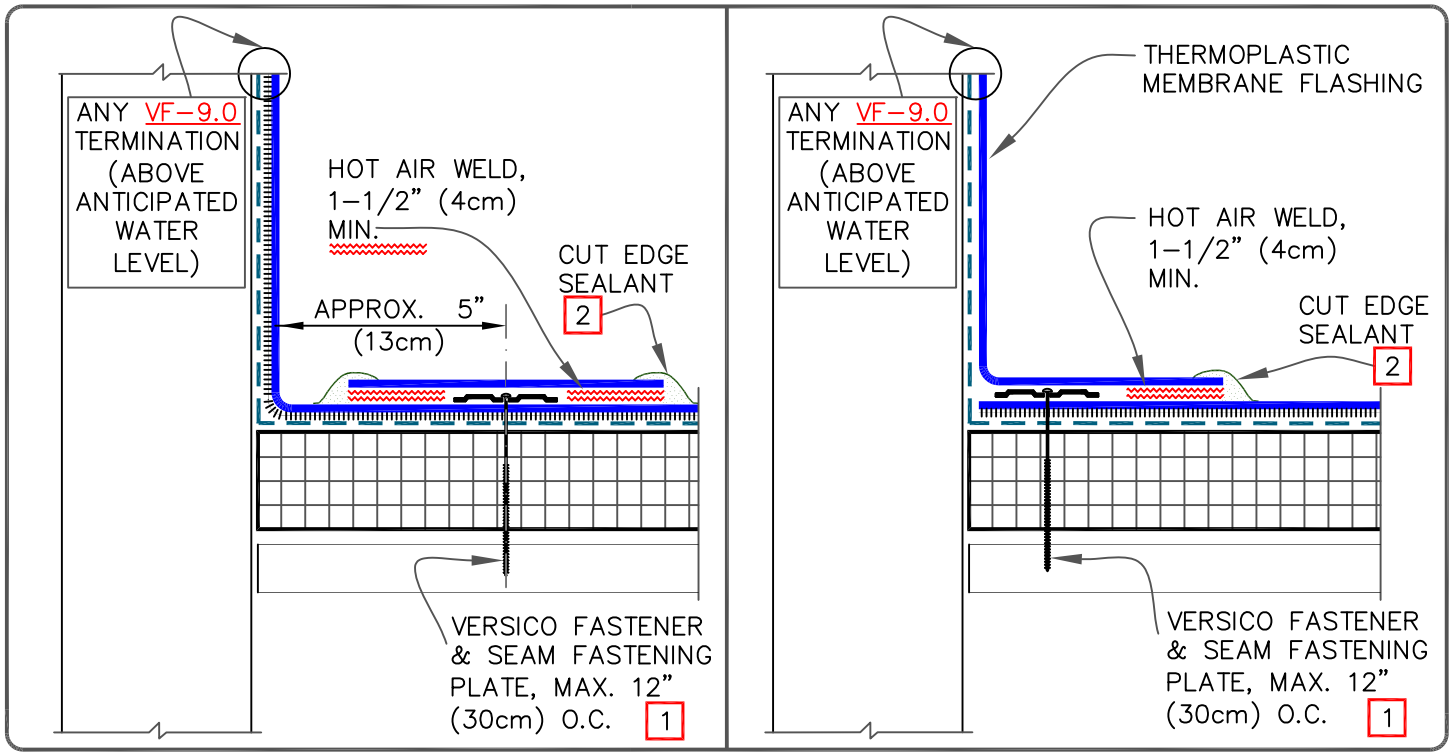

NOTES:

1. REGARDLESS OF WARRANTY/ WARRANTY WIND SPEEDS, MECHANICAL SECUREMENT MUST BE PROVIDED AT THE PERIMETER OF EACH ROOF LEVEL, ROOF SECTION, EXPANSION JOINT, CURB FLASHING, SKYLIGHT, INTERIOR WALL, PENTHOUSE, ETC., AT ANY INSIDE ANGLE CHANGE WHERE SLOPE EXCEEDS 2" IN ONE HORIZONTAL FOOT.

2. APPROXIMATELY 1/8" (0.5cm) DIAMETER BEAD OF CUT-EDGE SEALANT IS REQUIRED ON CUT EDGES OF REINFORCED TPO MEMBRANE.

3. WHEN APPLYING AQUA BASE 120 BONDING ADHESIVE TO VERSIFLEECE MEMBRANE ON THE VERTICAL WALL SUBSTRATE, APPLY A COAT OF AQUA BASE 120 ADHESIVE TO THE FLEECE SIDE OF THE MEMBRANE AND ALLOW TO DRY. ONCE THE ADHESIVE ON THE FLEECE IS DRY, APPLY BONDING ADHESIVE AT THE COVERAGE RATE OF 60 SQUARE FEET PER GALLON TO THE WALL SUBSTRATE AND A SECOND COAT TO THE VERSIFLEECE MEMBRANE.

VERSICO ROOFING SYSTEMS

© 2024 VERSICO

PARAPET/CURB WITH WATER BASED ADHESIVE

→ VERSIFLEECE MEMBRANE
→ AUQUA BASE 120/ HYDROBOND
→ APPROVED SUBSTRATE
0 → SEE NOTE(S)

VERSIFLEECE ADHERED

VF-12.3

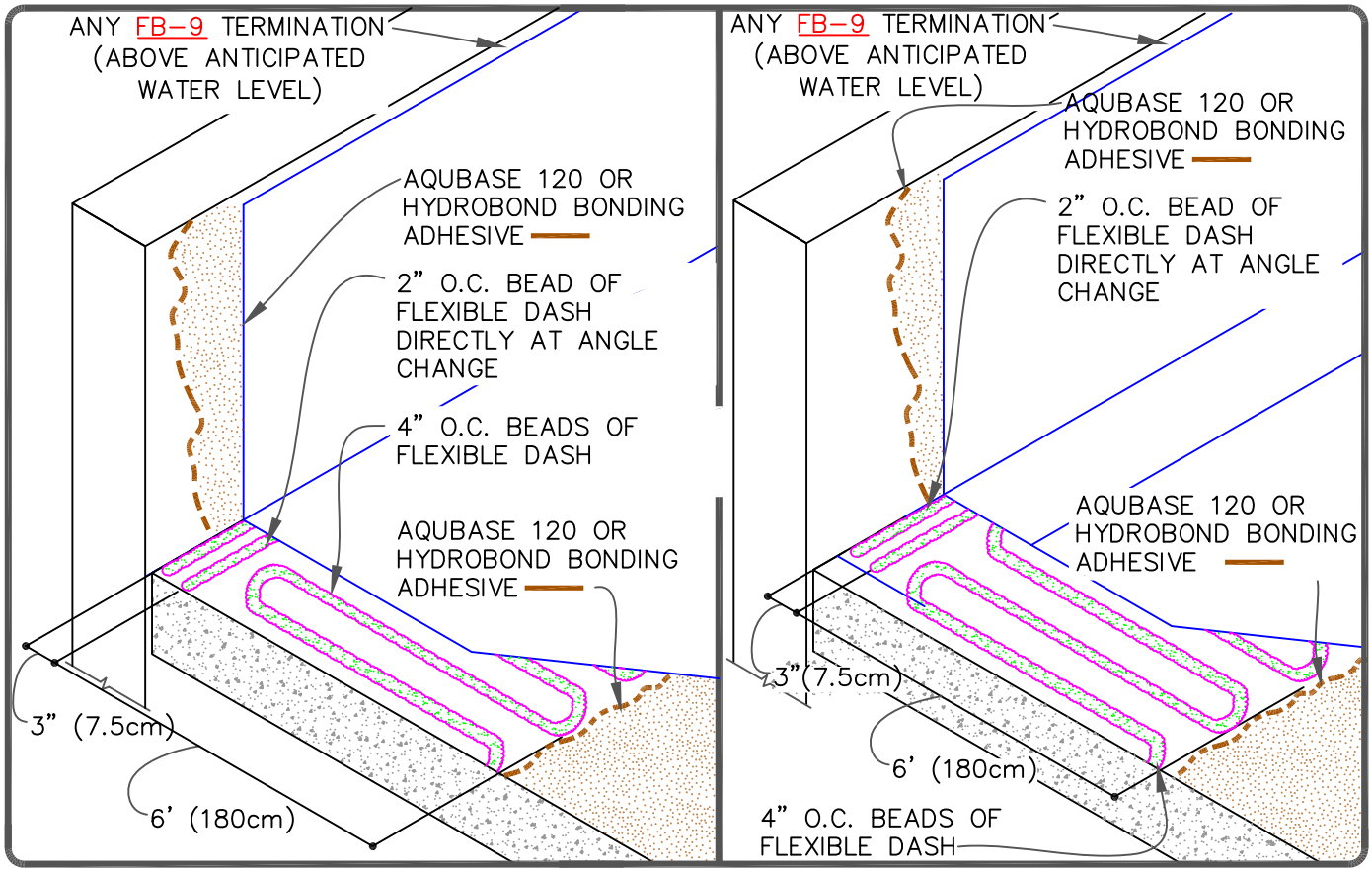

NOTES:

1. REGARDLESS OF WARRANTY/ WARRANTY WIND SPEEDS, SECUREMENT MUST BE PROVIDED AT THE PERIMETER OF EACH ROOF LEVEL, ROOF SECTION, EXPANSION JOINT, CURB FLASHING, SKYLIGHT, INTERIOR WALL, PENTHOUSE, ETC., AT ANY INSIDE ANGLE CHANGE WHERE SLOPE EXCEEDS 2" IN ONE HORIZONTAL FOOT.

2. SPLICES SHALL BE COMPLETED USING MINIMUM 1-1/2" (4cm) HOT AIR WELD WITH TPO/PVC.

3. APPROXIMATELY 1/8" (0.5cm) DIAMETER BEAD OF CUT-EDGE SEALANT IS REQUIRED ON CUT EDGES OF REINFORCED TPO MEMBRANE.

4. WHEN APPLYING AQUA BASE 120 BONDING ADHESIVE TO VERSIFLEECE MEMBRANE ON THE VERTICAL WALL SUBSTRATE, APPLY A COAT OF AQUA BASE 120 ADHESIVE OR HYDROBOND TO THE FLEECE SIDE OF THE MEMBRANE AND ALLOW TO DRY. ONCE THE ADHESIVE ON THE FLEECE IS DRY, APPLY BONDING ADHESIVE AT THE COVERAGE RATE OF 60 S.F./GALLON FOR AQUA BASE 120 AND 100 S.F./GALLON FOR HYDROBOND TO THE WALL SUBSTRATE AND A SECOND COAT TO THE VERSIFLEECE MEMBRANE.

VERSICO ROOFING SYSTEMS
© 2024 VERSICO

PARAPET/CURB-WATER BASED ADHESIVES W/ BEAD APPLIED FLEXIBLE DASH AT PERIMETERS-DIRECTLY OVER CONCRETE

- VERSIFLEECE MEMBRANE
- AUQUA BASE 120/ HYDROBOND
- APPROVED SUBSTRATE
- 0 — SEE NOTE(S)

VERSIFLEECE ADHERED

VF-12.4

1

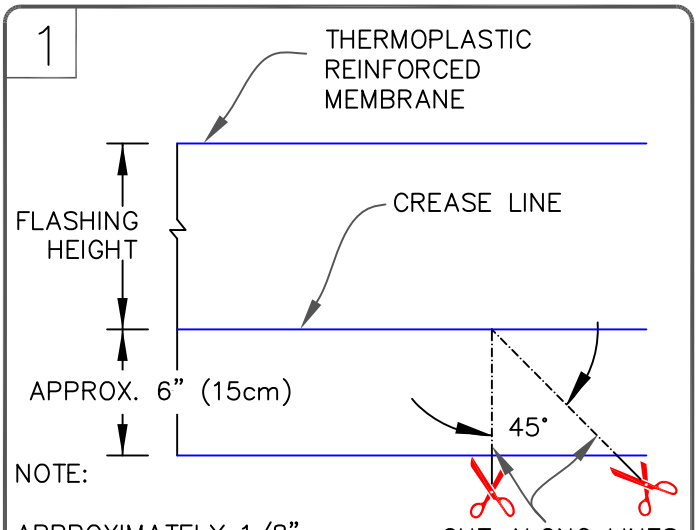

NOTE:

APPROXIMATELY 1/8" (0.5cm) DIAMETER BEAD OF CUT-EDGE SEALANT IS REQUIRED ON CUT EDGES OF REINFORCED TPO MEMBRANE AND RECOMMENDED ON CUT EDGES OF VERSIFLEX PVC MEMBRANE.

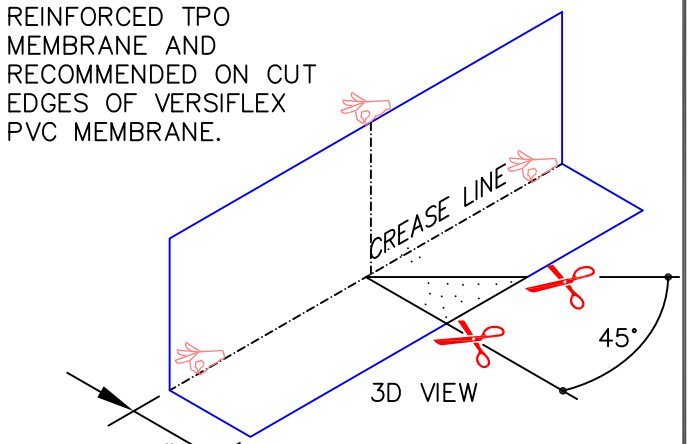

FOLD TO AN ANGLE TO FIT THE EXISTING INSIDE CORNER ANGLE

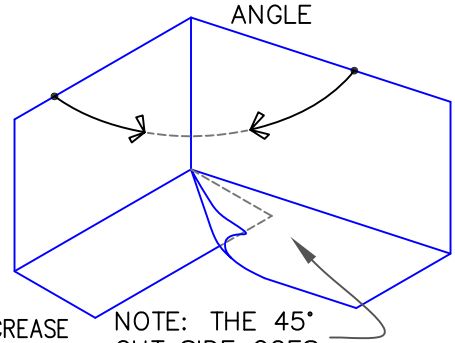

MAKE CREASE

CUT MEMBRANE

NOTE: THE 45° CUT SIDE GOES ABOVE THE 90° CUT SIDE.

2

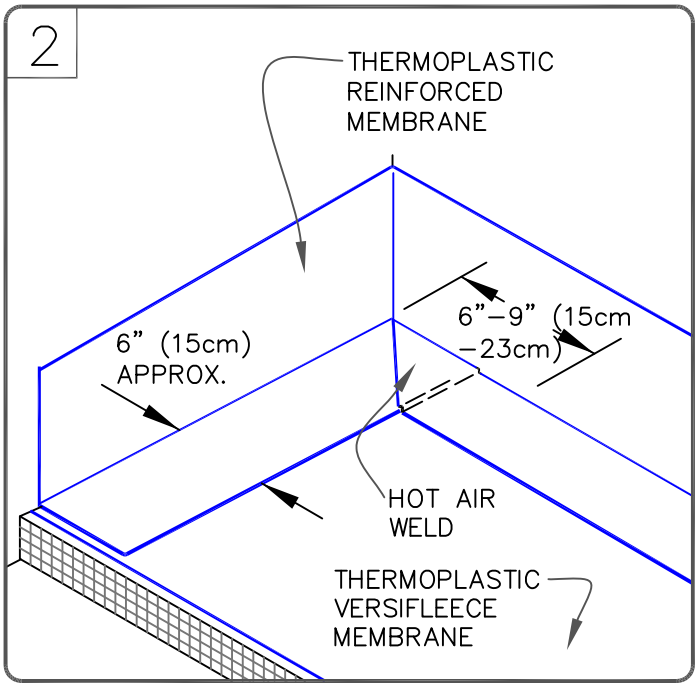

3

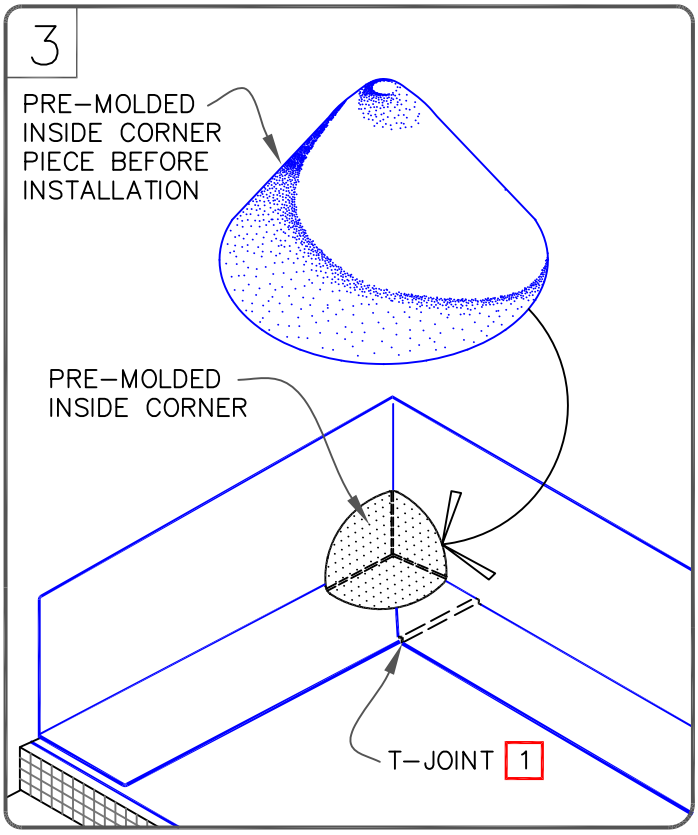

NOTE:

1. WHEN USING 115 OR 135-MIL MEMBRANE, APPLY A 4-1/2" (11cm) DIAMETER "T-JOINT" COVER AT ALL FIELD SPLICE INTERSECTIONS.

2. WHEN USING 115-MIL VERSIFLEECE TPO, MAXIMUM WARRANTY IS 20 YEARS

VERSICO ROOFING SYSTEMS

© 2024 VERSICO

THERMOPLASTIC PRE-MOLDED INSIDE CORNER

→ VERSIFLEECE MEMBRANE
→ FLEXIBLE DASH
→ APPROVED SUBSTRATE
0 → SEE NOTE(S)

THERMOPLASTIC VERSIFLEECE ADHERED

VF-15.3A

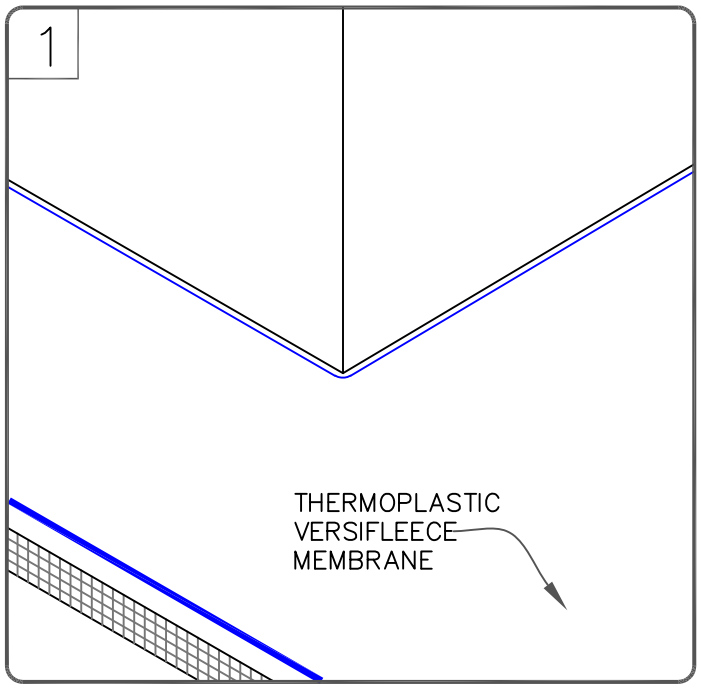

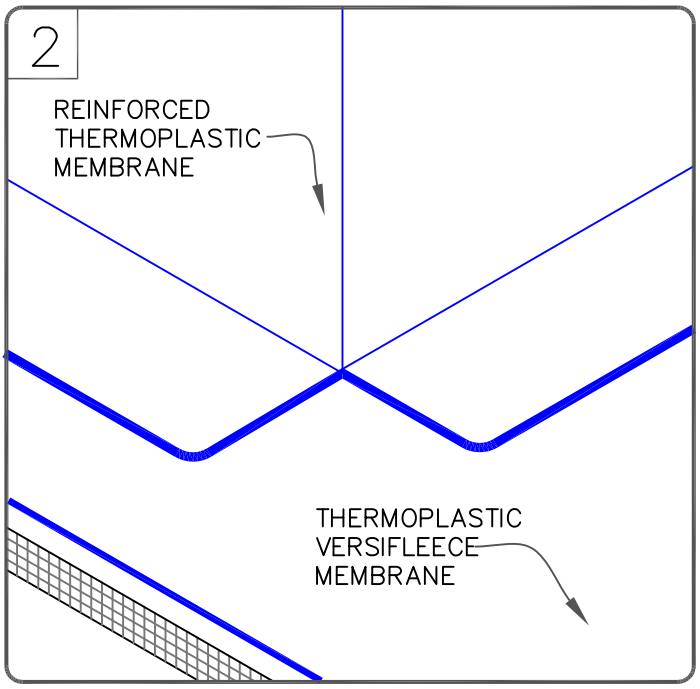

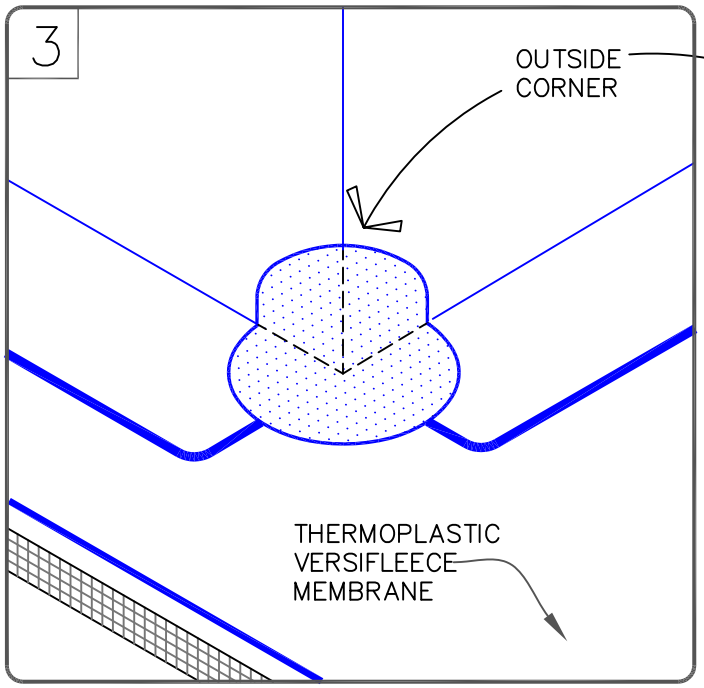

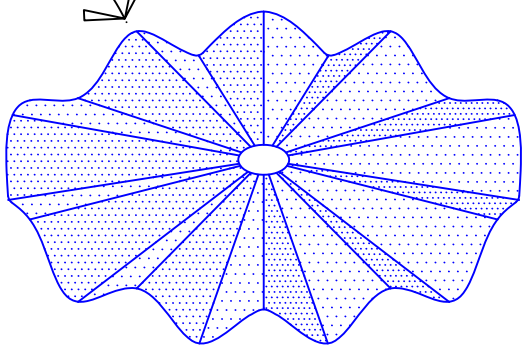

OUTSIDE CORNER
BEFORE INSTALLATION

NOTE:

APPROXIMATELY 1/8" (0.5cm) DIAMETER BEAD OF CUT-EDGE SEALANT IS REQUIRED ON CUT EDGES OF REINFORCED TPO MEMBRANE.

VERSICO ROOFING SYSTEMS
© 2024 VERSICO

THERMOPLASTIC
PRE-MOLDED OUTSIDE
CORNER

→ VERSIFLEECE MEMBRANE
→ FLEXIBLE DASH
→ APPROVED SUBSTRATE
0 → SEE NOTE(S)

THERMOPLASTIC
VERSIFLEECE
ADHERED

VF-15.4A

CAUTION

MOLDED SEALANT POCKETS MUST BE USED IN CONJUNCTION WITH RAIN HOODS FOR PROJECTS WITH 25 AND 30-YEAR WARRANTIES.

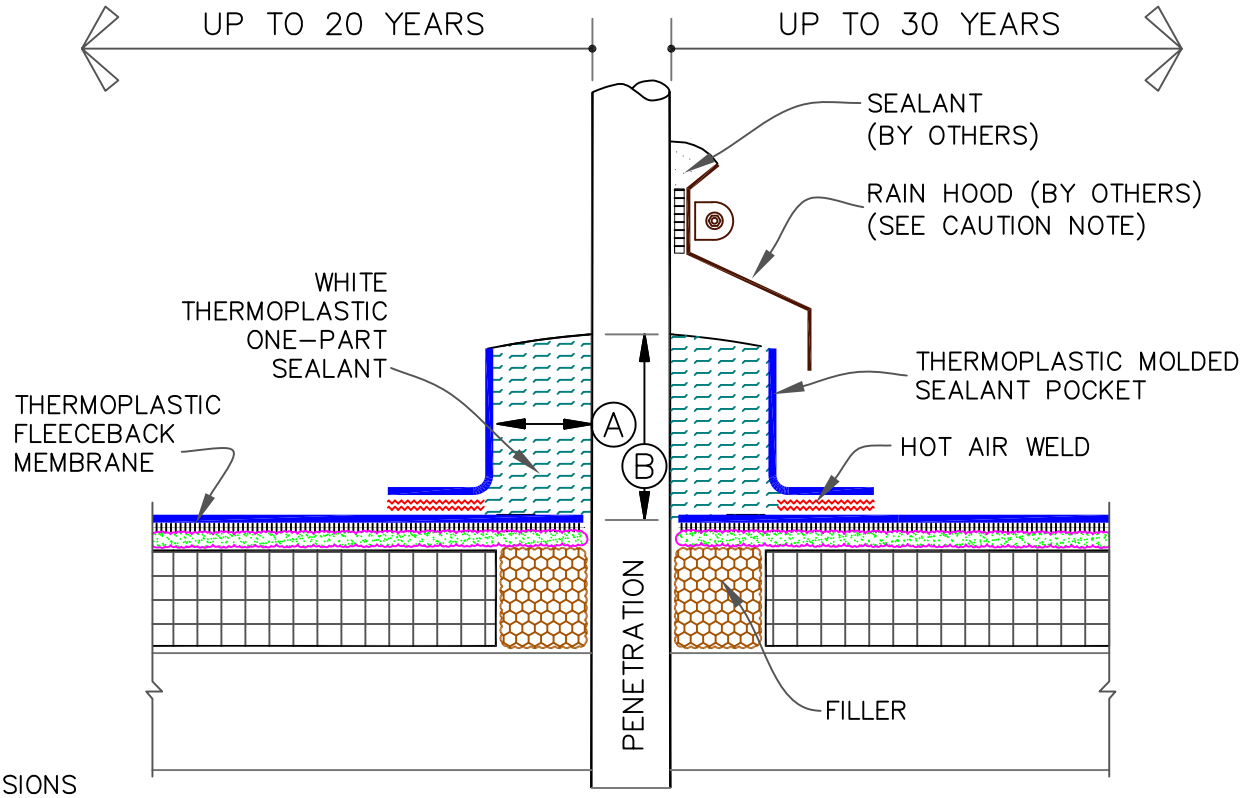

DIMENSIONS

		cm				cm	
A	1"	2.5	MIN.	B	2"	5	MIN.

NOTES:

2. TEMPERATURE OF THE PIPE PENETRATION MUST NOT EXCEED 140°F (60°C) WHEN USING PVC AND 160°F (71°C) WHEN USING TPO FLASHING.

3. <u>WHEN USING THERMOPLASTIC MEMBRANE/MOLDED SEALANT POCKET, APPLY A THIN COAT OF TPO/PVC PRIMER TO THE INSIDE AND AROUND THE TOP RIM OF THE POCKET, TO THE DECK MEMBRANE ENCLOSED BY THE POCKET AND TO THE PENETRATION USING A SMALL PAINT BRUSH.</u>

4. ONE-PART SEALANT MUST COMPLETELY FILL MOLDED SEALANT POCKET TO PREVENT PONDING OF WATER.

5. PIPE CLUSTERS MUST HAVE MINIMUM 1" (2.5cm) CLEARANCE BETWEEN PENETRATIONS.

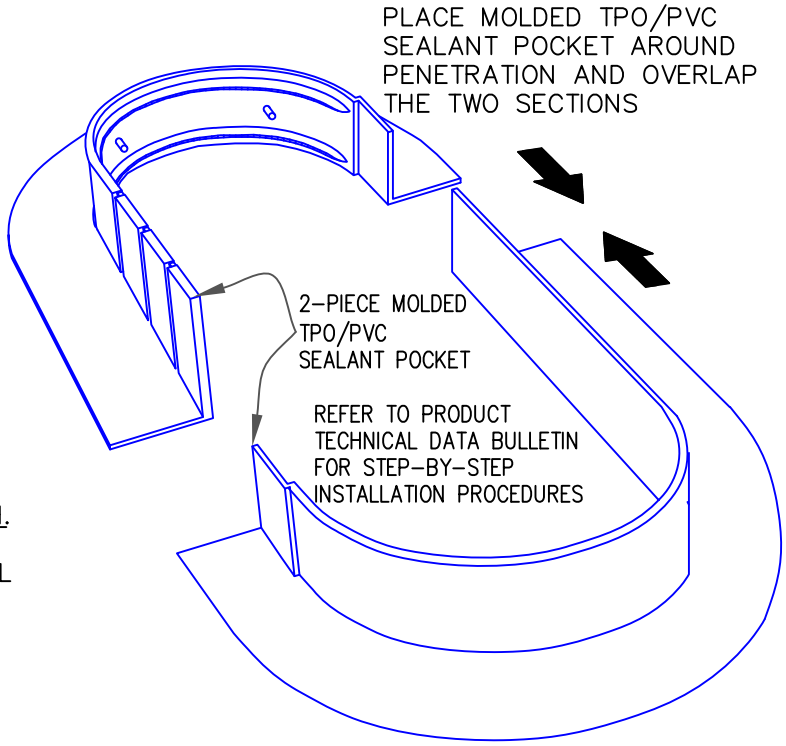

VERSICO ROOFING SYSTEMS

© 2024 VERSICO

THERMOPLASTIC MOLDED SEALANT POCKET

→ VERSIFLEECE MEMBRANE
→ FLEXIBLE DASH
→ APPROVED SUBSTRATE
0 → SEE NOTE(S)

THERMOPLASTIC VERSIFLEECE ADHERED

VF-16.2A

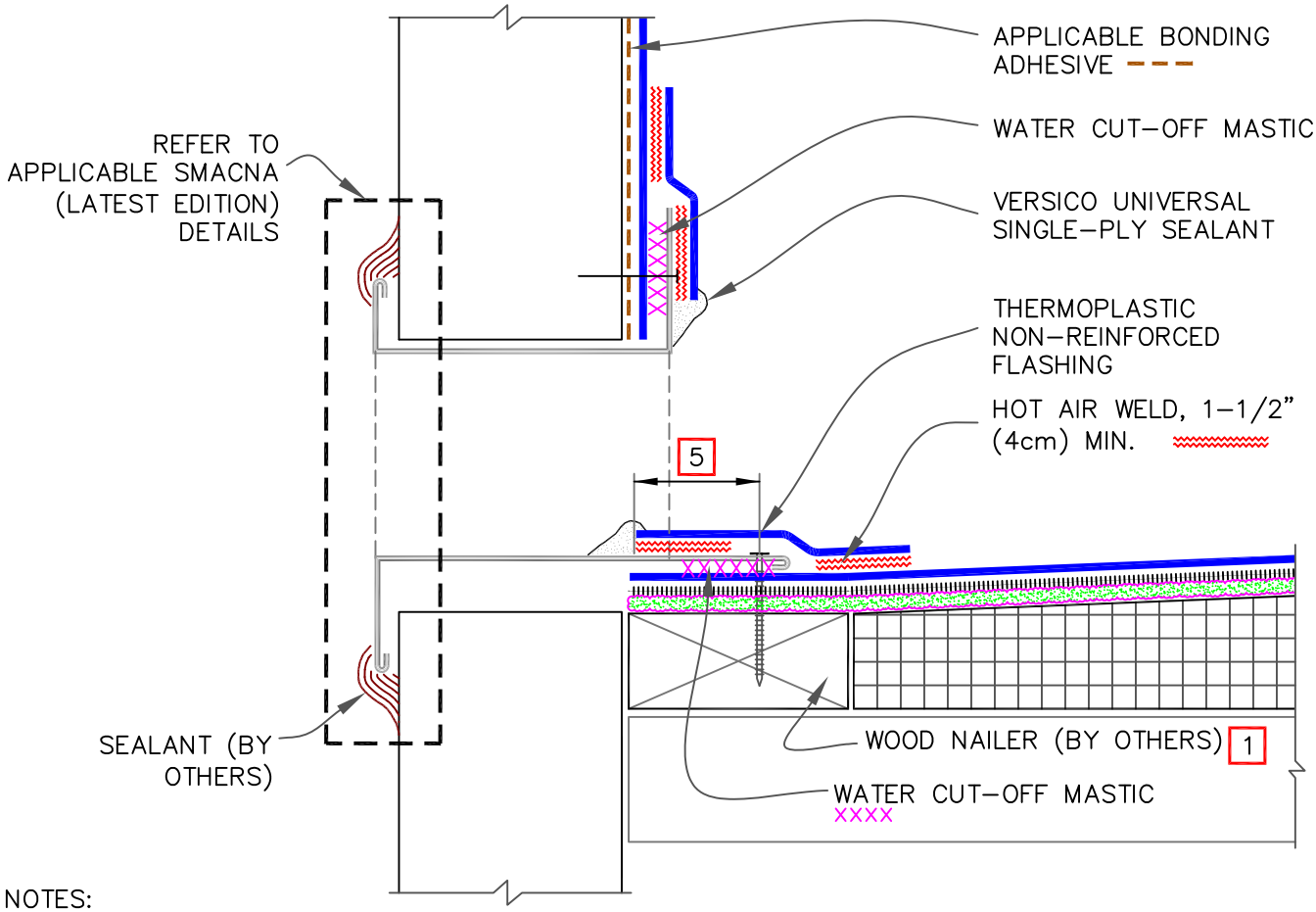

NOTES:

1. WOOD NAILERS ARE INSTALLED ONLY AT SCUPPERS TO SECURE METAL SLEEVE AND MUST EXTEND PAST THE WIDTH OF METAL SLEEVE FLANGE.
2. INSTALL WALL FLASHING PRIOR TO SCUPPER INSTALLATION.
3. METAL SCUPPER BOX MUST HAVE CONTINUOUS FLANGES WITH ROUNDED CORNERS. SOLDER ALL SCUPPER SEAMS WATER-TIGHT.
4. WATER CUT-OFF MASTIC UNDER SCUPPER FLANGE MUST BE UNDER CONSTANT COMPRESSION.
5. SCUPPER FLANGES MUST BE TOTALLY COVERED BY THERMOPLASTIC NON-REINFORCED FLASHING WITH MINIMUM 2" (5cm) COVERAGE PAST NAIL HEADS.
6. UNIVERSAL SINGLE-PLY SEALANT IS REQUIRED AT FLASHING EDGES ON SCUPPER EDGE. WHEN USING THERMOPLASTIC FLASHING, THERMOPLASTIC PRIMER MUST BE USED TO PREPARE SURFACES PRIOR TO THE APPLICATION OF SEALANT.

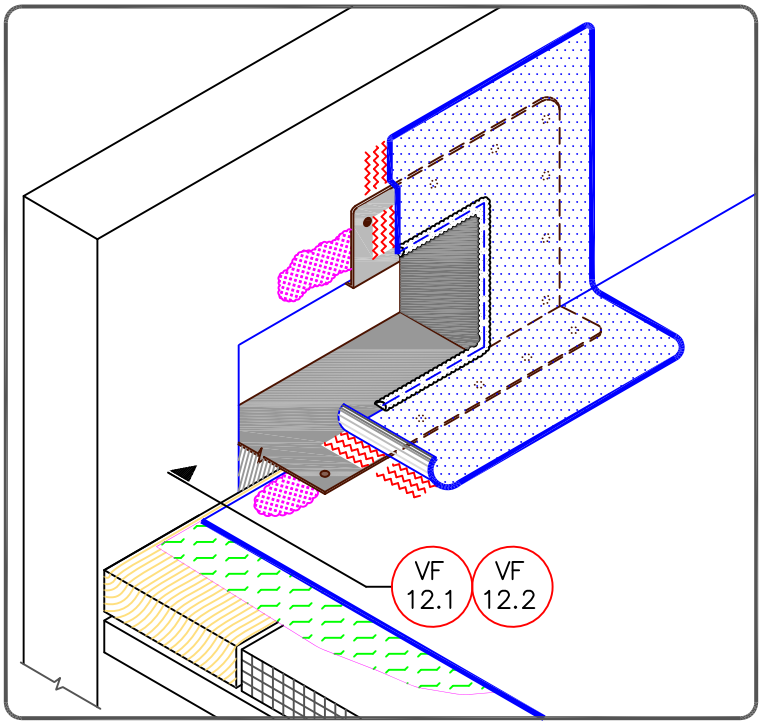

VERSICO ROOFING SYSTEMS

© 2024 VERSICO

THROUGH-WALL SCUPPER WITH THERMOPLASTIC COATED METAL

→ VERSIFLEECE MEMBRANE
→ FLEXIBLE DASH
→ APPROVED SUBSTRATE
0 → SEE NOTE(S)

THERMOPLASTIC VERSIFLEECE ADHERED

VF-18.2A

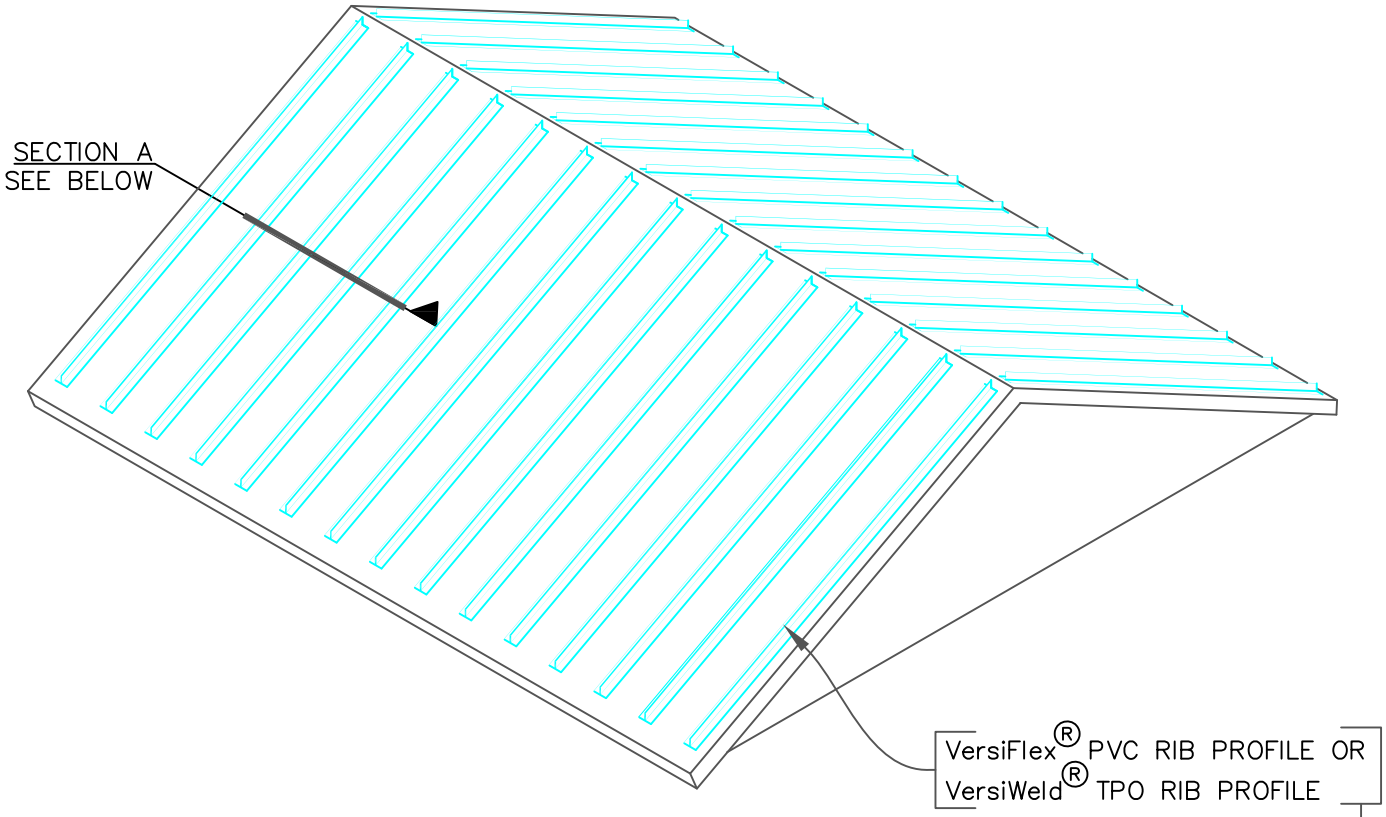

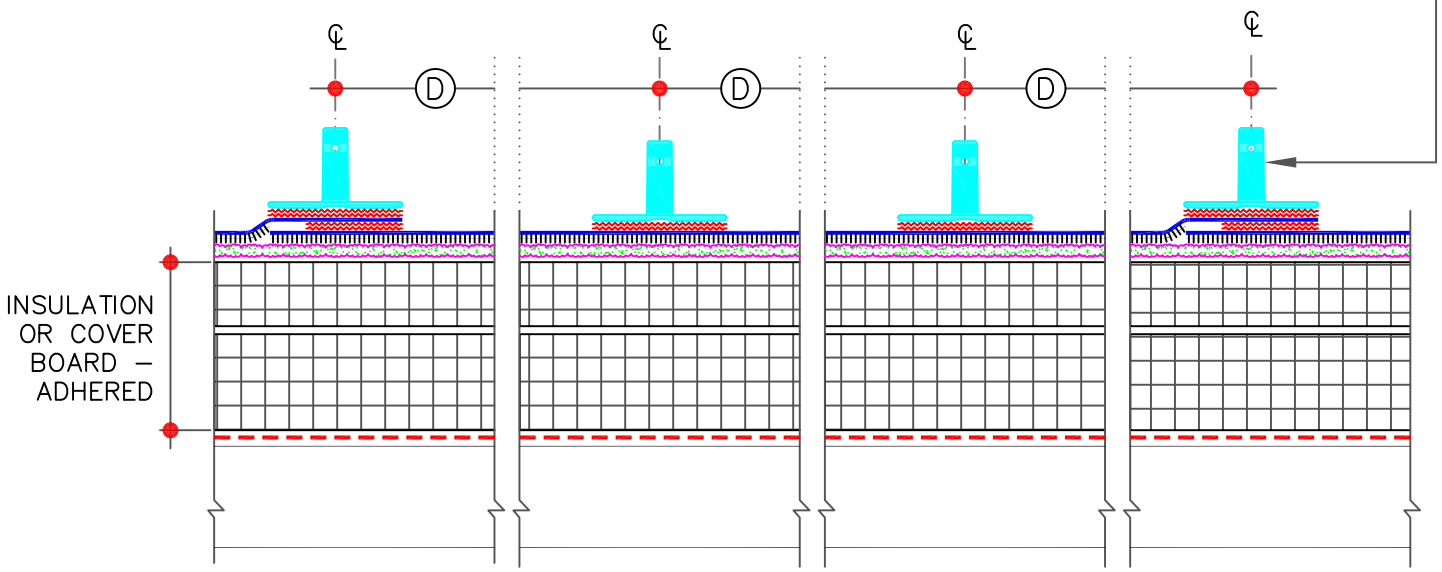

SECTION A: PVC/TPO RIB PROFILE

RIB PROFILE DIMENSIONS		
	INCH	mm
A	1–3/4"	4.5
B	1–1/4"	3
C	1/2"	1
D	VARIES	

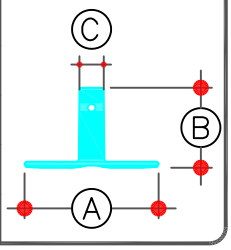

HOT AIR WELD (REFER TO SPECS)

AIR/VAPOR BARRIER (WHERE REQUIRED)

VERSICO ROOFING SYSTEMS

© 2024 VERSICO

SIMULATION OF METAL ROOF IN THERMOPLASTIC MEMBRANES

→ VERSIFLEECE MEMBRANE
→ FLEXIBLE DASH
→ APPROVED SUBSTRATE
0 → SEE NOTE(S)

THERMOPLASTIC VERSIFLEECE ADHERED

VF–25.1A

NOTES:

1. REFER TO VERSICO SPECIFICATIONS FOR PRODUCT DATA SHEETS FOR APPROPRIATE BEAD SPACING BASED UPON THE BUILDING HEIGHT, WARRANTY TERM AND ACCEPTABLE SUBSTRATE.

2. THE SURFACE TO WHICH ADHESIVE IS TO BE APPLIED SHALL BE DRY, FREE OF FINS, PROTRUSIONS, SHARP EDGES, LOOSE AND FOREIGN MATERIALS, OIL AND GREASE. AREA SHOULD BE CLEANED WITH AN AIR BLOWER.

3. PREVIOUSLY UNEXPOSED ASPHALT OR RESIDUE MUST BE PRIMED WITH VERSICO CAVGRIP 3V, 702 OR 702LV PRIMER.

4. SEAL ALL GAPS IN THE CONCRETE DECK WITH VERSICO 725TR OR OTHER SUITABLE MATERIAL TO AVOID CONDENSATION ISSUES OR FILL WITH VERSICO INSULATION ADHESIVE.

5. UNROLL 10' TO 15' OF MEMBRANE TO ENSURE IT IS PROPERLY ALIGNED AND FOLD UNROLLED SECTION BACK OVER ROLL.

6. APPLY FLEXIBLE DASH ADHESIVE OVER THE SUBSTRATE AREA TO BE COVERED BY THE MEMBRANE THAT IS FOLDED BACK.

7. ALLOW FLEXIBLE DASH ADHESIVE TO RISE AND DEVELOP "STRING / BODY" (APPROX. 1–1/2 TO 2 MINUTES). STRING TIME WILL VARY BASED ON ENVIRONMENTAL CONDITIONS LIKE TEMPERATURE AND HUMIDITY. DO NOT ALLOW THE ADHESIVE TO OVER–CURE PRIOR TO SETTING INSULATION BOARDS.

8. ROLL THE MEMBRANE USING A 30" WIDE, 150 POUND WEIGHTED SEGMENTED STEEL ROLLER, TO SET THE MEMBRANE BACK INTO THE ADHESIVE.

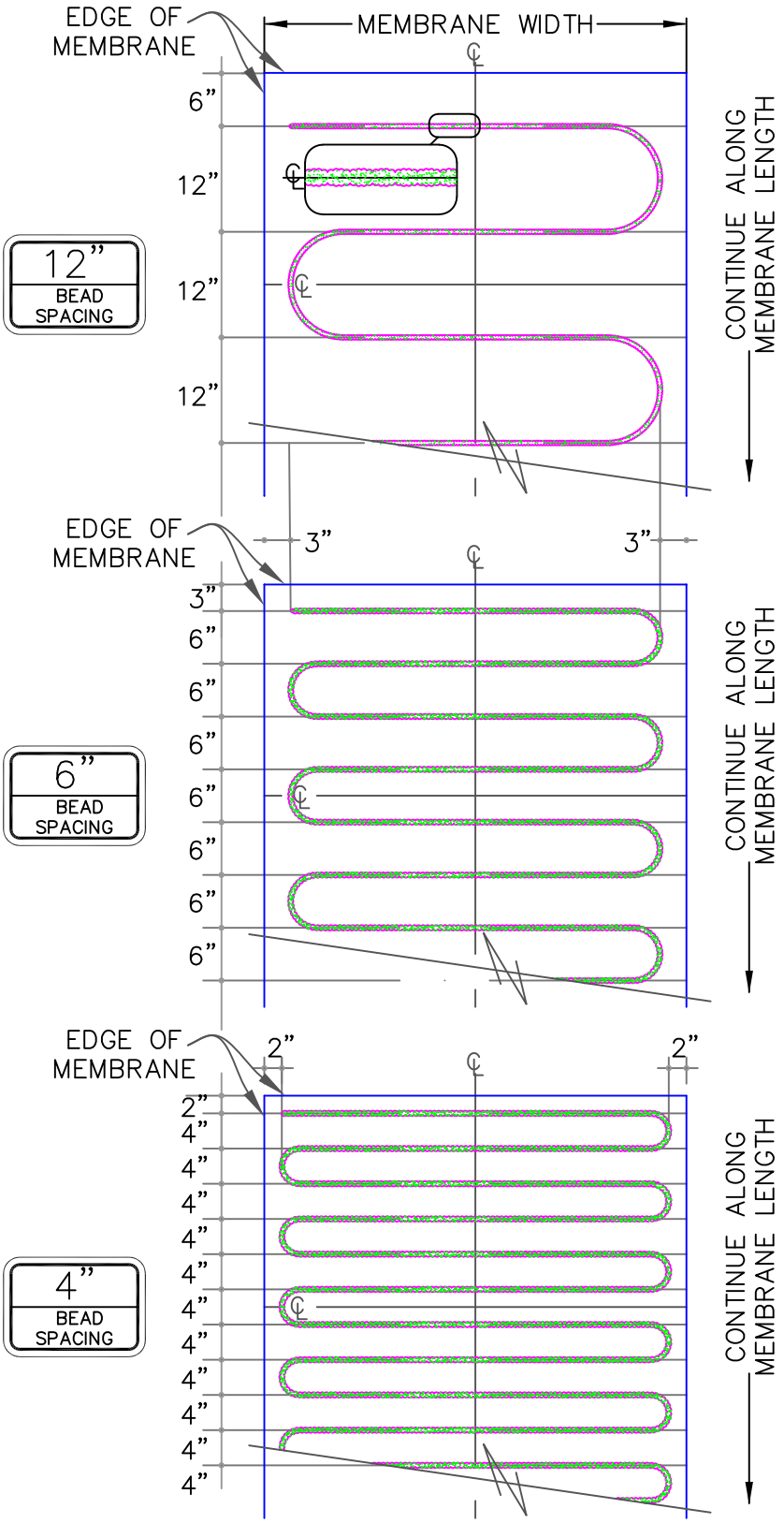

FEET TO CENTIIMETERS	
4'	8'
122	244

	INCHES TO CENTIMETERS																
inch	1/4"	1/2"	3/4"	1"	1.5"	2"	2.5"	3"	4"	5"	6"	7"	8"	9"	10"	11"	12"
cm	1	1.5	2	2.5	4	5	6.5	7.5	10	13	15	18	20	23	25	28	30

VERSICO ROOFING SYSTEMS

© 2024 VERSICO

VERSIFLEECE MEMBRANE ATTACHMENT USING BEAD ADHESIVE

FOAM ADHESIVE
CENTER LINE
GUIDE LINE

ADHERED SYSTEM

VF – 27

VERSIFLEECE AC
ROOFING SYSTEMS

Hot Mopped / Cold Applied Adhered (VersiFleece AC TPO/VersiFleece KEE HP) Mechanically Attached Roofing System (VersiFleece AC TPO/VersiFleece AC EPDM)

January 2024

Table of Contents

Part I – General **Page**

1.01 Description 3
1.02 Assembly Options 4
1.03 General Design Considerations 6
1.04 Quality Assurance 7
1.05 Submittals 7
1.06 Warranty 8

Warranty Tables

Table I –Membrane System Warranty Options – 5 YR to 25 YR 9
Table II -Base Sheet Options for Direct Hot Mopped Membrane 9
Table III –Underlayment/Insulation & Required Attachment for New Construction/Tear-Off – Up to 20 YR 10
Table IV -Direct Application to Existing Roofing Materials - Up to 15 YR Warranty 11
Table V –Underlayment/Insulation & Required Attachment Assemblies for Hot Mopped – 25 YR 11

1.07 Job Condition/ Cautions and Warnings 12
1.08 Product Delivery, Storage, and Handling 14

Part II - Products

2.01 General 14
2.02 Membranes 15
2.03 Insulation / Underlayment 16
2.04 Related Materials 18
2.05 Fastening Components 21
2.06 Other Products 22
2.07 Roof Walkways 22
2.08 Edging and Terminations 23

Part III - Execution

3.01 General 24
3.02 Roof Deck Criteria 24
3.03 Substrate Preparation 25
3.04 Wood Nail Insulation 26
3.05 Base Sheet and Insulation Attachment 27
3.06 AC Membrane Installation 28
3.07 AC VersiWeld Heat Welding Procedure 30
3.08 Welding Problems / Repairs 31
3.09 Additional Membrane Securement for AC Membrane Adhered with Cold Applied Adhesive 31
3.10 Flashing Considerations 32
3.11 Related Products Installation 32

ATTACHMENTS

Attachment I - Mechanically Attached Option 34

Installation Details 39

VERSICO
ROOFING SYSTEMS

This page intentionally blank

Hot Mopped / Cold Applied (VersiFleece AC TPO/VersiFleece KEE HP) Mechanically Attached Roofing System (VersiFleece AC TPO/VersiFleece AC EPDM)

January 2024

The information contained in this generic specification represents a part of Versico's requirements for obtaining a roofing system warranty. Construction materials and practices, building siting and operation, climatic conditions, and other site-specific factors will have an impact on the performance of the roofing system. Versico recommends that the building owner retain a design professional to determine appropriate design measures to be taken in order to address these factors.

PART I – GENERAL

1.01 Description

The Hot Mopped / Cold Applied VersiFleece AC or VersiFleece KEE HP Membrane System incorporates the use of hot mopped (Type III or IV Asphalt, or SEBS Modified Asphalt) or cold applied (Cold Applied Adhesive, an asphalt-modified polyether Low-VOC adhesive) VersiFleece AC (TPO/EPDM) or VersiFleece KEE HP membrane to recover various existing roof systems. The membrane assembly can also be used for new construction or when existing roofing material is to be removed.

1. VersiFleece AC EPDM membranes:
   a. VersiGard AC EPDM combines 45- or 60-mil VersiGard non-reinforced EPDM membrane with 7.5 ounce per square yard (45-mil thick), non-woven polyester polypropylene blended fleece-backing resulting in a total thickness of 90-mil or 105-mil thick.

   b. VersiGard (white) AC EPDM membrane combines 60-mil VersiGard (white) non-reinforced EPDM membrane with 7.5 ounce per square yard (45-mil thick), non-woven polyester polypropylene blended fleece-backing resulting in a total thickness of 105-mil thick.

2. VersiFleece AC VersiWeld TPO membrane combines 45-, 60- or 80-mil VersiWeld TPO polyester reinforced membrane with 10 ounce per square yard (75-mil thick), non-woven polyester polypropylene blended fleece-backing resulting in a total thickness of 120-, 135- or 155-mil thick.

3. VersiFleece VersiFlex KEE HP membrane combines 50-, 60- or 80-mil VersiFlex KEE HP polyester reinforced membrane with 7.5 ounce per square yard (55-mil thick), non-woven polyester polypropylene blended fleece-backing resulting in a total thickness of 105-, 115- or 135-mil thick.

Adjoining EPDM sheets are spliced together with Factory-Applied Quick-Applied Seam Tape (QAT) and Primer. Sheet end laps are butted and overlaid with Quick-Applied Cured Cover Strip or Quick-Applied Overlayment Strip.

When TPO or KEE HP membrane is used, adjoining sheets are overlapped and joined with a minimum 1-1/2 inch wide hot air weld. Sheet end laps are butted together and overlaid with VersiWeld Reinforced Membrane and hot air welded.

NOTE: As an alternate to the fully adhered method, the membrane can be mechanically attached over existing roofing membrane as a recover option with or without insulation. Refer to Attachment I at the end of this section.

1.02 Assembly Options

A. **Projects with Smooth BUR (Type III or IV Asphalt), Mineral Cap Sheet or SBS Modified Bitumen**

VersiFleece AC or VersiFleece KEE HP Membrane fully adhered with Type III or IV Asphalt, SEBS Modified Asphalt, or Versico Cold Applied Adhesive after priming the existing roofing membrane with CCW-550 Cut Back Asphalt. When Cold Applied Adhesive is to be used, power washing the existing membrane is an acceptable alternative to Cut Back Asphalt.

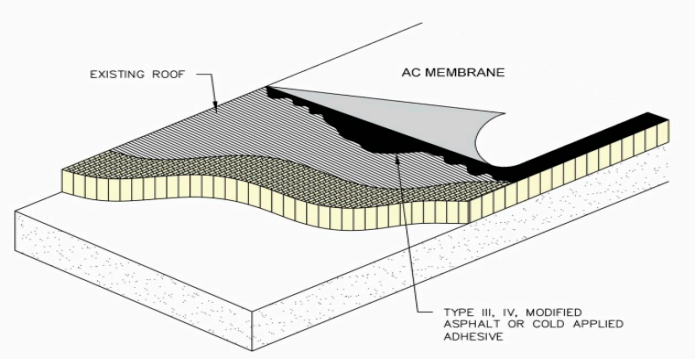

Figure 1

B. **Projects with Wood, Gypsum, Lightweight Insulating Concrete, Fibrous Cement (No Insulation)**

When VersiFleece AC or VersiFleece KEE HP Membrane is installed over cellular or perlite based lightweight insulated concrete, one-way vents are required and must be installed at the rate of 1 vent every 2000 square feet.

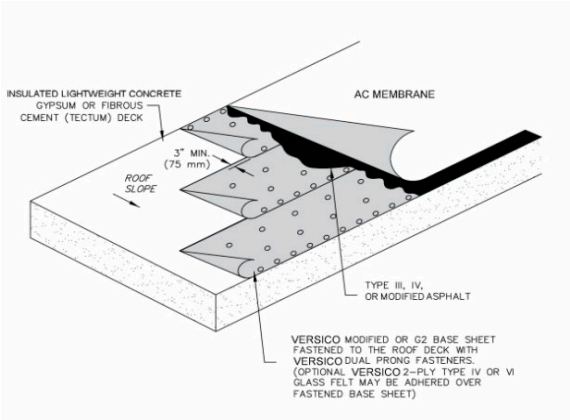

Figure 2

1. When specified, the membrane can be mopped with acceptable asphalt directly to a fastened Versico G2 or Modified Base Sheet.

2. Cold Applied Assemblies, the membrane may be fully adhered directly to a wood, gypsum, or lightweight concrete deck (cellular or perlite based). Over fibrous cement decks Versico G2 or Modified Base Sheet must be fastened to the deck.

3. Projects with vermiculite lightweight insulated concrete, VersiFleece AC or VersiFleece KEE HP membrane must be installed directly over Versico G2 Base Sheet prior to mopping the membrane and one-way vents are required. Vents shall be installed at the rate of 1 every 1000 square feet.

C. **Projects with Structural Concrete Decks**

1. In a Hot Mopped Assembly, the membrane may be applied directly to the deck after the surface has been primed with CCW-550 Cut Back Asphalt Primer. Projects where a two-ply vapor retarder/temporary roof has been specified, the membrane may be mopped directly to Versico's Type IV Glass Ply Felt.

2. In Cold Applied Assemblies, the membrane may be fully adhered directly to the structural concrete.

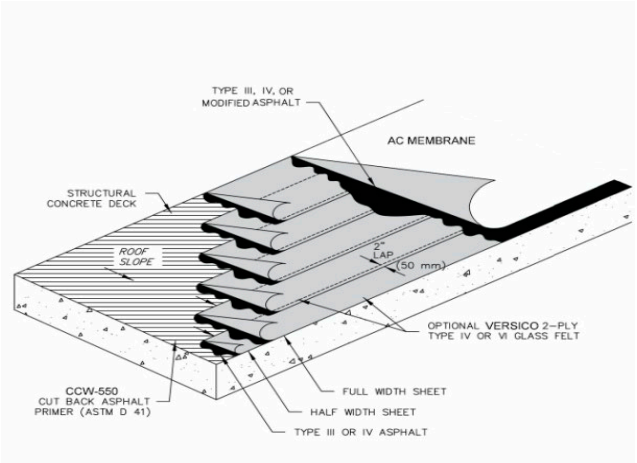

Figure 3

Caution: Curing compounds used in conjunction with structural concrete decks must be compatible with the attachment method and should be investigated. Certain concrete curing compounds develop a seal or oil coating on the concrete's surface that can prevent adhering to the substrate.

D. **Projects Where Additional Insulation is Specified**

1. **General**

   a. For Hot Mopped Assemblies, when additional insulation is desired the new insulation must be overlaid with Versico 1/2" thick Versico Recovery Board, or Securock.

   b. Both new insulation and the membrane underlayment may be mechanically attached or fully adhered with either Flexible DASH Adhesive or mopped in with Type III / IV or SEBS Modified Asphalt (maximum board size is 4' x 4').

   c. On fluted/corrugated steel decks, insulation cannot be mopped to the steel deck. New insulation must be attached incorporating mechanical securement or Flexible DASH Adhesive.

2. **Projects with Gypsum and Fibrous Decks**

   When mopping insulation to gypsum, fibrous cement and wood decks, Versico G2 Base Sheet or Versico Modified Base Sheet must be used and shall be fastened to the deck.

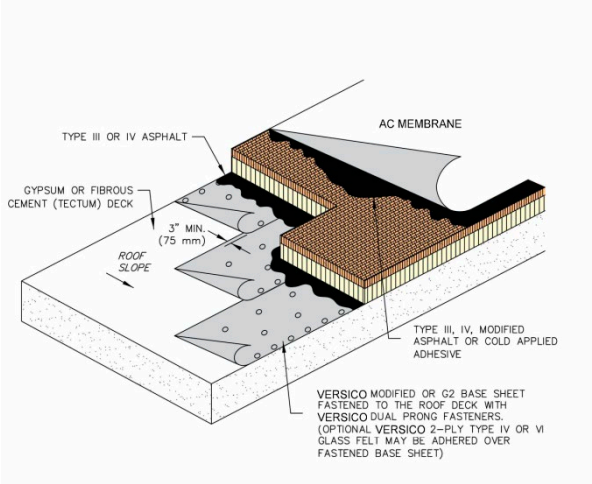

Figure 4

3. **Projects with Structural Concrete Decks**

On structural concrete decks, when mopping of new insulation is specified, the deck shall be primed with Cut Back Asphalt Primer prior to mopping of insulation boards. As an option, two plies of Versico Type IV or VI Glass Felt may be mopped to the primed concrete surface.

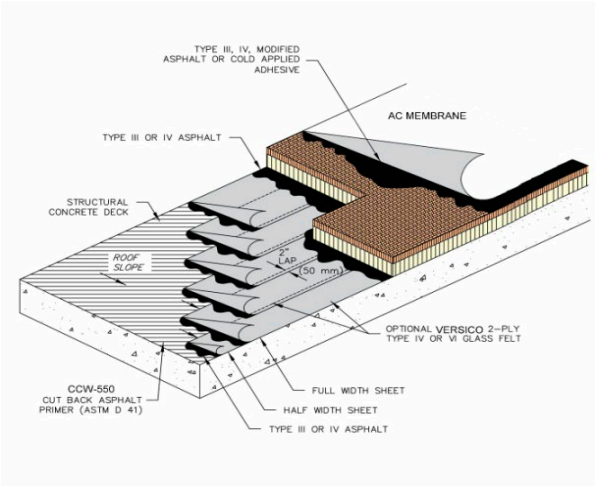

Figure 5

1.03 General Design Considerations

A. Petroleum based products, certain chemicals and waste products (i.e. grease, oil, animal fats, etc.) are not compatible with this roofing system. Versico should be contacted for verification of compatibility and recommendations concerning an acceptable roofing assembly.

B. It is the responsibility of the Specifiers to review local, state and regional codes to determine their impact on the specified Versico Roofing System.

C. It is the responsibility of the building owner or his/her designated representative to verify structural load limitation. In addition, a core cut may be taken to verify weight of existing components when the roofing system is to be specified on an existing facility.

D. Coordination between various trades is essential to avoid unnecessary rooftop traffic over completed sections of the roof and to prevent possible damage to the membrane roofing system.

E. Concentrated loads from rooftop equipment may cause deformation of insulation/underlayment and possible damage to the membrane if protection is not provided. At protection course or sleepers must be specified.

F. Roof Insulation thickness must be determined by the thermal value required for each project and may be subject to code approval limitations. On projects where a vapor retarder is used, the specifier must calculate insulation thickness to ensure the temperature at the vapor retarder will not fall below the calculated dew point.

G. Multiple layers of insulation are recommended, with all joints staggered between layers.

H. For minimum recommended R-Values, previously published by American Society of Heating and Air-Conditioning Engineers (ASHRAE), consult local building code official for applicable requirements.

I. On new construction projects, especially in cold climate regions, moisture generated due to the construction process could adversely impact various components within the roofing assembly if not addressed. Refer to **Spec Supplement G-01-18 "Construction Generated Moisture"** included in the Versico Technical Manual**.**

J. Vapor Retarders

1. Versico does not require a vapor retarder for the protection of the membrane; however, it should be considered by the specifier for the protection of the roofing assembly (i.e. primarily insulation, underlayment and adhesives). The following criteria should be considered by the specifier:

2. Use of a vapor retarder to protect insulation and reduce moisture accumulation within an insulated roofing assembly, should be investigated by the specifier.

3. In the generally temperate climate of the United States, during the winter months, water vapor flows upward from a heated, more humid interior toward a colder, drier exterior. Vapor retarders are more commonly required in northern climates than in southern regions, where downward vapor pressure may be expected and the roofing membrane itself becomes the vapor retarder.

K. On structural concrete decks, when a vapor retarder is not used, gaps in the deck along the perimeter and around penetrations must be sealed along with vertical joints between tilt-up panels, if present, to prevent infiltration of hot humid air and possible moisture contamination resulting from condensation.

1.04 Quality Assurance

A. Building codes are above and beyond the intended purpose of this specification. The building **owner**, **owner's representative** or **Specifier** should verify local codes for applicable requirements and limitations. It is the responsibility of the specifier to review local, state and regional codes to determine their impact on the specified Versico Roofing System.

NOTE: For code approvals achieved with the Versico Roofing Systems, refer to the Versico Code Approval Guide, DORA (Directory of Roof Assemblies), Factory Mutual (FM) Approval Guide or Underwriters Laboratories (UL) Fire Resistance or Roofing Materials and Systems Directories.

B. When recovering or retrofitting an existing roof system, the addition of new insulation (type and thickness) may alter the fire performance characteristics of the assembly. Building owners or their designated representatives shall consult the local code enforcement agency to avoid potential code violation.

C. Versico recommends the use of Versico supplied products with this roofing system. The performance or integrity of products by others, when selected by the specifier and accepted as compatible by Versico, is not the responsibility of Versico and is disclaimed by the Versico Warranty.

D. The solar reflectance of the white membrane may decrease over time due to environmental defacement such as dirt, biological growth, ponded water, etc. The roof should be monitored at regular intervals and maintained or cleaned when necessary to assure the maximum solar reflectance.

E. This roofing system must be installed by a Versico Authorized Roofing Contractor in compliance with drawings and specifications as approved by Versico Roofing Systems.

F. There must be no deviations made from Versico's specifications or the approved shop drawings without the PRIOR APPROVAL of Versico.

G. After completion of the installation, upon request, an inspection shall be conducted by a Field Service Representative of Versico Roofing Systems to ascertain the membrane system has been installed according to Versico's published specifications and details applicable at the time of bid. This inspection is to determine whether a warranty shall be issued. It is not intended as a final inspection for the benefit of the owner.

1.05 Submittals

A. To ensure compliance with Versico's warranty requirements, the following projects should be forwarded to Versico for review prior to installation, preferably prior to bid.

1. Projects where building height exceeds 50 feet.

2. Air pressurized buildings or buildings with large openings where the total wall openings exceed 10% of the total wall area on which the openings are located (such as airport hangars, warehouses and large maintenance facilities).

3. Cold storage buildings and freezer facilities.

4. Projects where the membrane is expected to come in direct contact with petroleum based products or other chemicals.

5. Projects where wind speed warranty coverage greater than 90 mph is specified.

6. For all projects, prior to inspection by Versico, a final shop drawing should be approved. Depending on project complexity and number of roof levels, a project description/profile may be substituted. Contact Versico for clarification.

B. Shop drawings must be submitted to Versico by the Versico Authorized Roofing Contractor along with a completely executed Copy-A Job Approval Request for approval. Approved shop drawings are required for inspection of the roof and on projects where on-site technical assistance is requested.

Shop drawings must include:

1. Outline of roof and size

2. Deck type (for multiple deck types)

3. Location and type of all penetrations

4. Perimeter and penetration details

5. Key plan (for multiple roof areas) with roof heights indicated

When field conditions necessitate modifications to originally approved shop drawings, a copy of the shop drawing outlining all modifications must be submitted to Versico for revision and approval prior to inspection and warranty issuance.

C. Copy-B Job Completion

After project completion, a Copy-B Job Completion Date must be submitted to Versico to schedule the necessary inspection of the project prior to issuance of the Versico Warranty.

D. As-Built Projects (roofing systems installed prior to project approval by Versico)

The Versico Authorized Contractor may supply Versico with an As-Built drawing for a project completed prior to Versico's approval. The As-Built drawings:

1. Must conform to Versico's most current published specifications and details applicable at the time of bid.
2. Must be submitted along with a completely executed Copy-B Job Completion.

1.06 Warranty

A. Membrane System Warranty is available for roofing systems on commercial buildings within the United States and applies only to products manufactured or marketed by Versico Roofing Systems. The membrane system is defined as membrane, flashings, adhesives, sealants and other Versico brand products utilized in the installation. For a complete description of these products, refer to the Part 2 "Products" Section in this specification and **Spec Supplement P-01-18 "Related Products".**

B. See Tables Below for information regarding Warranted Systems and Design Criteria:

1. **Table I – Membrane System Warranty Options- 5 YR to 30 YR.** Identifies minimum membrane thickness for membranes used in hot mopped and cold applied roofing systems.

2. **Table II – Base Sheet Requirements for Direct Hot Mopped Membrane** Identifies base sheet options for hot mopped roofing systems.

3. **Table III – Underlayment/Insulation & Required Attachment New Construction/Tear-Off- Up to 20 YR** Identifies required underlayments for fully adhered roofing systems with Warranties up to 20 year based on the various wind speed coverages available. The Table also identifies fastening density or adhesive bead spacing and required edge terminations.

4. **Table IV - Direct Application to Existing Roofing Materials - Up to 15 YR.** Identifies the acceptable existing roofing materials that the VersiFleece AC or VersiFleece KEE HP membrane can be fully adhered directly with either asphalt or Cold Applied Adhesive up to 15 year based on the wind speed coverage available.

5. **Table V – Underlayment/Insulation & Required Attachment Assemblies Hot Mopped 25/30 YR.** Identifies required underlayments for fully adhered roofing systems with Warranties up to 30 years based on the various wind speed coverages available. The Table also identifies fastening density or adhesive bead spacing and required edge terminations.

Table I Membrane System Warranty Options – 5 Year to 30 Year

General: When VersiFleece AC or VersiFleece KEE HP membrane are fully adhered directly to an acceptable existing roofing material as shown in Paragraph 1.02.A or to a concrete deck as shown in Paragraph 1.02.C, the application will be limited to Maximum 15 Year Warranty with Peak Gust Wind Speed of 72 MPH. When greater warranty coverage is specified, Versico must be contacted to determine any added enhancements.

Years	Membrane Attachment (3)			Minimum Membrane Thickness	Additional Coverage (1)		
	55 or 72 mph	80 mph	90 mph		Accidental Puncture	1" Dia. Hail	2" Dia. Hail
5, 10, or 15 year	Type III / IV or Cold Applied	SEBS	SEBS & Modified Base Sheet	AC EPDM 90-mil	Up to 8 man-hours per year	Type III / IV or Cold Applied	NA (2)
				AC TPO 120-mil	NA (2)		
20 year	Type III / IV or Cold Applied	SEBS	SEBS & Modified Base Sheet	AC EPDM 90-mil (4)	Up to 8 man-hours per year	Type III / IV or Cold Applied	NA (2)
				AC TPO 135-mil (4)	Up to 16 man-hours per year		SEBS or Cold Applied
25 year	Type III / IV & Modified Base Sheet	SEBS & Modified Base Sheet	NA (2)	AC EPDM 105-mil	Up to 16 man-hours per year	SEBS	SEBS
				AC TPO 155-mil	Up to 32 man-hours per year		
25 year	Type III / IV & Modified Base Sheet	SEBS & Modified Base Sheet	NA (2)	AC TPO 155-mil	Up to 32 man-hours per year	SEBS	SEBS

(1) Hail coverage option is available and requires underlayment of Versico Recovery Board, or Securock
(2) NA = Not Available
(3) See Table III for Underlayment/Insulation Requirements

Table II Base Sheet Requirements for Direct Hot Mopped Membrane

General: When a base sheet is required in Paragraph 1.02 Assembly Options or when it is mandated by Warranty duration, the appropriate Versico base sheet must be used as outlined in Table II below. Applications where the base sheet is fastened to wood, gypsum, lightweight insulated concrete, or fibrous cement decks will be limited to Maximum 15 Year Warranty with Peak Gust Wind Speed of 72 MPH. When greater warranty coverage is specified, Versico must be contacted to determine any added enhancements.

Years	Versico Type IV or VI Glass Ply Felt	Versico G2 Base Sheet	SureMB Vented Base	SureMB 70 SA Base Ply	SureMB 90TG Base	SureMB 90 Base Ply	SureMB 120TG Base
5, 10 or 15 year	√	√	√	√	√	√	√
20 year	√	√	√	√	√	√	√
25 year	NA	NA	NA	NA	NA	√√	√√
30 year	NA	NA	NA	NA	NA	√√	√√

Notes: √√ = Required √ = Acceptable NA = Not Available

Table III Underlayment/Insulation & Required Attachment for New Construction/Tear-Off Assemblies Up to 20 YR

Other Requirements are Listed in Additional Design Considerations following this Table

All Versico Products listed for higher wind speed coverage can also be used for Warranties for lower speed coverage. (i.e. 72 MPH underlayment may be used for 55 MPH underlayment)

Warranty Wind Speed	Hot Mopped	Cold Applied	Minimum Membrane Underlayment	Insulation/Underlayment Attachment				
				Asphalt Fully Mopped 4' x 4' size bd		Adhesive Ribbon Spacing for 4' x 4' size bd		# of Fasteners for 4' x 8' size bd (6)
						Field	Perimeter	
55mph		√	1" 20-psi Polyiso	Type III or IV		12” (1)(2)	6” (1)	16
		√	1-1/2" 20-psi Polyiso	Type III or IV		12” (1)(2)	6” (1)	10
		√	2" 20-psi Polyiso	Type III or IV		12”(1)(2)	6” (1)	8
	√	√	1/2” Versico Recovery Bd	Type III or IV		12”(1)(2)	6” (1)	16
72mph or 80mph		√	1/4" Securock	Not Recommended		12” (1)(2)(3)	6” (1)(3)	12
		√	1/2' SecurShield HD (7)	72 mph	80 mph	12” (1)(2)(3)	6” (1)(3)	16
				Type III or IV	SEBS			
	√	√	1/2” HP Recovery Bd	72 mph	80 mph	12” (1)(2)(3)	6” (1)(3)	16
				Type III or IV	SEBS			
		√	1-1/2" 25-psi Polyiso	72 mph	80 mph	12” (1)(2)(3)	6” (1)(3)	11
				Type III or IV	SEBS			
		√	2" 25-psi Polyiso	72 mph	80 mph	12” (1)(2)(3)	6” (1)(3)	8
				Type III or IV	SEBS			
90mph	√	√	1/2" Securock	SEBS		6” (5)	6” (3)(4)	12
		√	1-1/2" 20-psi SecurShield	SEBS		6” (5)	6” (3)(4)	16
		√	2" 20-psi SecurShield	SEBS		6” (5)	6” (3)(4)	8
		√	2” HD Polyiso Composite	SEBS		6” (5)	6” (3)(4)	8

Notes:
√ = Acceptable
(1) Gravel Surface BUR - Field @ 6” O.C/ Perimeter @ 4” O.C.
(2) Steel Decks – Field & Perimeter @ 6” O.C.
(3) Cementitious Wood Fiber - Field @ 6” O.C/ Perimeter @ 4” O.C.
(4) Smooth BUR- Field @ 6” O.C/ Perimeter @ 4” O.C.
(5) Gravel Surface BUR – Full Spray or Ribbons @ 4” O.C.
(6) For steel, concrete, and wood plank decks
(7) 1/2” SecurShield HD FR may be used in lieu of 1/2” SecurShield HD

Additional Design Considerations

1. Refer to Table I for minimum membrane thickness.
2. Local Wind Zone as shown in the ASCE 7 shall not exceed 130 mph.
3. All “T-joints” must be overlaid with appropriate flashing material.
4. For ponding locations, seams should be overlaid with quick applied flashing.
5. 1/4” per horizontal foot slope is preferred; however 1/8” slope with sufficient number of drains and crickets/saddles may be accepted.
6. Versico Termination bars are required for replacement of existing counterflashing. VersiTrim metal work is recommended.
7. All wet roofing materials must be totally removed.

Table IV Direct Application to Existing Roofing Materials - Up to 15 YR

Other requirements are listed in Additional Design Considerations following this Table.

Warranty Wind Speed	Existing Roofing Material (2)	Membrane Adhesion	
		Hot Mopped	Cold Applied
55mph or 72mph	Smooth Surface BUR / Mineral Surface Cap Sheet	Direct with Type III or IV Asphalt	Direct
	Modified Bitumen	Direct with Type III or IV Asphalt	Direct (1)

Notes:
(1) SBS modified bitumen only.
(2) Refer to paragraph 3.03 for existing material preparation.

Additional Design Considerations

1. Refer to Table I for minimum membrane thickness.
2. Local Wind Zone as shown in the ASCE 7 shall not exceed 130 mph.
3. All "T-joints" must be overlaid with appropriate flashing material.
4. For ponding locations, seams should be overlaid with quick applied flashing.
5. 1/4" per horizontal foot slope is preferred; however 1/8" slope with sufficient number of drains and crickets/saddles may be accepted.
6. Versico Termination bars are required for replacement of existing counterflashing. VersiTrim metal work is recommended.
7. All wet roofing materials must be totally removed.
8. Insulation/ cover board will be required for reroofing of Gravel Surface BUR, Coal Tar Pitch, or existing single-ply membrane. Refer to Table III.
9. For 20 year warranty or additional wind coverage, please contact Versico for design considerations.

Table V Underlayment/Insulation & Required Attachment Assemblies Hot Mopped 25/30 YR

Cold applied assemblies are not acceptable to for 25-year warranties

Other requirements are listed in Additional Design Considerations following this Table

All Versico Products listed for higher wind speed coverage can also be used for Warranties for lower speed coverage. (i.e. 72 MPH underlayment may be used for 55 MPH underlayment)

Wind Speed	Min. Membrane Underlayment	Insulation/Underlayment Attachment			
		Asphalt Fully Mopped 4' x 4' size board	Adhesive Ribbon Spacing for 4' x 4' size board		# of Fasteners for 4' x 8' size board (4)
			Field	Perimeter	
55 mph	1/2" Recovery Bd or Securock	Type III or IV	6" (1)(2)	6" (2)	16
72 mph or 80 mph	1/2" Recovery Bd or Securock	SEBS	6" (1)(2)(3)	6" (2)(3)	16

(1) Structural Concrete - Field @ 12" O.C/ Perimeter @ 6" O.C.; 80-mph over structural concrete – Field & Perimeter @ 6" O.C.
(2) Cementitious Wood Fiber & Wood – Full Spray or Ribbons @ 4" O.C.
(3) 80-mph over Gypsum Decks –Full Spray or Ribbons @ 4" O.C.
(4) For steel, concrete, and wood plank decks.

Additional Design Considerations

1. Refer to Table I for minimum membrane thickness.
2. Local Wind Zone as shown in the ASCE 7 shall not exceed 130 mph.
3. All "T-joints" must be overlaid with appropriate flashing material.
4. For ponding locations, seams should be overlaid with quick applied flashing.
5. 1/4" per horizontal foot slope is preferred; however 1/8" slope with sufficient number of drains and crickets/saddles may be accepted.
6. Versico Termination bars are required for replacement of existing counterflashing. VersiTrim metal work is recommended.
7. All wet roofing materials must be totally removed.
8. For 25/30 YR Splice Criteria refer to **Spec Supplement E-02-18 "EPDM Membrane Splicing and Splice Repairs"**

E. Access for warranty service

It shall be the owner's responsibility to expose the membrane in the event warranty service is required when access is impaired. Such impairment includes, but is not limited to:

1. Design features, such as window washing equipment, which requires the installation of traffic surface units in excess of 80 pounds per unit.

2. Any equipment, ornamentation, building service units and other top surfacing materials which are not defined as part of this specification.

3. Photovoltaic and Mounting Systems or other Rooftop equipment which do not provide Versico with reasonable access to the membrane system for purposes of warranty investigation and related repairs.

4. Severely ponded conditions.

CAUTION: APPLICATIONS SUCH AS WALKING DECKS, TERRACES, PATIOS OR AREAS SUBJECTED TO CONDITIONS NOT TYPICALLY FOUND ON ROOFING SYSTEMS WILL NOT BE ELIGIBLE FOR A SYSTEM WARRANTY.

F. Industrial pollutants, environmental dirt, and ponding conditions will discolor the surface of a white VersiFleece AC or VersiFleece KEE HP membrane. Lack of additional membrane protection during application will increase the probability of soiling and will affect aesthetics of the roofing system. All these factors will result in minor color variations of the White membrane in comparison to the original undisturbed color. When aesthetics are of importance, the specifier's requirements must be added in the project specifications pertaining to precautionary installation methods and necessary clean up.

Versico disclaims responsibility for the cleanliness of discoloration of the membrane system caused by environmental conditions including, but not limited to, dirt, pollutants, or biological agents and discoloration caused by or resulting from initial installation.

G. The formation or presence of mold or fungi in a building is dependent upon a broad range of factors including, but not limited to, the presence of spores and nutrient sources, moisture, temperatures, climatic conditions, relative humidity, and heating / ventilation systems and their maintenance and operating capabilities. These factors are beyond the control of Versico and Versico shall not be responsible for any claims, repairs, restoration or damages relating to the presence of any irritants, contaminants, vapors, fumes, molds, fungi, bacteria, spores, mycotoxins, or the like in any building or in the air, land, or water serving the building.

1.07 Job Conditions/ Cautions and Warnings

Safety Data Sheets (SDS) must be on location at all times during transportation, storage, and application of materials. The contractor shall follow all safety regulations as recommended by OSHA and other agencies having jurisdiction.

A. When VersiFleece AC TPO or VersiFleece AC EPDM (white) membrane is specified, a slope greater than 1/8" per horizontal foot is recommended to serve long-term aesthetics. For VersiFleece AC TPO when the roof slope exceeds 5' per horizontal foot, use of an automatic heat welding machine may be more difficult. Hand held heat welders should be specified.

B. Asphalt slope restriction for membrane and/or insulation attachment

1. Type III Asphalt maximum roof slope of 1/2" in 12" (4 cm/m).

2. Type IV or Modified Asphalt can be used for projects with a maximum roof slope of 1-1/2" in 12".

3. Projects with roof slopes exceeding 1-1/2" in 12" must be submitted to Versico for review prior to installation.

C. Projects where lightweight insulated concrete fill is being removed, new insulation must be mechanically attached or attached with modified SEBS asphalt after priming the deck surface. Lightweight insulated concrete slurry seals the concrete deck pores and prevents asphalt flowing into them, reducing asphalt attachment and wind uplift performance.

D. It is the responsibility of the specifier to review local, state and regional codes to determine their impact on this roofing system.

E. Drainage

1. Drainage must be evaluated by the specifier in accordance with all applicable codes. Slopes may be provided

by tapering the structure or through the use of tapered insulation; a sufficient number of roof drains should also be specified and properly located to allow for positive drainage. Significant ponding that could remain after 48 hours should be eliminated with the addition of auxiliary drains in low areas where ponding is anticipated.

Versico specifically disclaims responsibility for design and selection of an adequate drainage system and drain accessories. The selection must be made by the building owner or the owner's design professional.

2. Incidental areas of ponded water will not impact the performance of this roofing system; however, in accordance with industry standards, the roofing assembly should be designed to prevent ponding of water on the roof for prolonged periods (longer than 48 hours). Good roofing practice dictates proper drainage to prevent possible excessive live loads and, in the event of a roof leak, to minimize potential interior damage to the roofing assembly and to the interior of the building.

3. Tapered edge strips, crickets or saddles are recommended where periodic ponding of water may occur.

F. Vapor Retarder

1. Versico does not require a vapor retarder for the protection of the membrane; however, the following criteria should be considered by the specifier:

   a. Use of a vapor retarder to protect insulation and reduce moisture accumulation within an insulated roofing assembly, should be investigated by the specifier. Consult latest publications by ASHRAE (American Society of Heating, Refrigerating and Air-Conditioning Engineers, Inc.) and NRCA (National Roofing Contractors Association) for specific information.

   b. In the generally temperate climate of the United States, during the winter months, water vapor flows upward from a heated, more humid interior toward a colder, drier exterior. Vapor retarders are more commonly required in northern climates than in southern regions, where downward vapor pressure may be expected and the roofing membrane itself becomes the vapor retarder.

   c. On cold storage/freezer facilities, the perimeter and penetration details must be selected to provide an air seal and prevent outside air from infiltrating and condensing within the roofing assembly.

G. Wood Nailers

Wood nailers are required for the securement of metal edgings, metal scuppers, and certain curbs, pipes, etc., as shown on the applicable detail. Parapet walls and most curbs do not require the utilization of wood nailers.

A horizontal wood nailer is used to provide an effective substrate for some installation details and for other roof accessories. In addition, it is used to provide solid protection for the edge of the membrane underlayment. Minimum thickness of the nailer must be such that the top of the nailer is flush with the top of the membrane underlayment.

1. The width of the nailers must exceed the width of the metal flange of edgings, scuppers, etc.

2. When treated lumber is specified, it is recommended that only lumber that has been pressure treated with salt preservatives be specified. Lumber treated with any of the wood preservatives such as, Creosote, Pentachlorophenol, Copper Naphthenate and Copper 8-quinolinolate will adversely affect the VersiFleece membrane when in direct contact and are, therefore, unacceptable.

   If non-treated lumber is to be specified, it must be stored to protect from moisture sources. A seal should be provided between the non-treated lumber and a concrete or gypsum substrate (similar to a sill sealer).

3. Methods used to fasten the nailer vary with building conditions; however, it is essential that secure attachment of durable stock be accomplished. Factory Mutual Loss Prevention Data Bulletin 1-49 (Perimeter Flashing) contains options for the spacing and sizing of fasteners based on the project wind zone.

4. Wood nailers are not covered by the Versico warranty.

H. Retrofit – Recover Projects (when existing roofing material is left in place).

1. The removal of existing wet insulation and membrane must be specified. The specifier shall select an appropriate and compatible material as filler for voids created by removal of old insulation or membrane.

2. When specifying over existing PVC membranes, the membrane may be totally removed or be cut into maximum 10 foot by 10 foot sections. An acceptable membrane underlayment shall be specified and must be mechanically secured, refer to Warranty Table III in this specification. All PVC flashings at the perimeter, roof drains and roof penetrations must be removed.

3. When specifying this roofing system over existing gravel surfaced built-up roof, loose gravel must be removed

to avoid entrapment of moisture. In all cases, a membrane underlayment is required.

4. Existing Phenolic Foam insulation must be removed prior to the installation of this roofing system.

1.08 Product Delivery, Storage and Handling

A. Deliver materials to the job site in the original, unopened containers labeled with the manufacturer's name, brand name and installation instructions.

B. Prolonged exposure of Pressure-Sensitive products to temperatures below 40°F (5°C) will cause the pre-applied adhesive to lose tack and in extreme cases, not bond to the membrane.

C. Job site storage temperatures in excess of 90°F may affect shelf life of curable materials (i.e. sealants, cleaners, primers, QA Seam Tape, Pourable Sealer, Pressure-Sensitive Flashing and uncured flashing).

D. When liquid adhesives and sealants are exposed to lower temperatures, restore to a minimum of 60° F (16°C) before use. Do not store containers with opened lids due to loss of solvent that will occur from flash-off.

E. Do not store adhesive, primer, Weathered Membrane Cleaner, etc., containers with opened lids due to the loss of solvent, which will occur from flash-off.

F. When loading materials onto the roof, the Versico Authorized Roofing Contractor must comply with the requirements of the specifier/owner to prevent overloading and possible disturbance to the building structure.

G. When temperature is expected to fall below 40°F (5°C), outside storage boxes should be provided on the roof for temporary storage of liquid adhesives and sealants. Adhesive and sealant containers should be rotated to maintain their temperature of above 40°F (5°C). Refer to Technical Data Bulletins for individual products for temperature restrictions.

H. VersiFleece AC Membrane should be stored in its original plastic wrap or be covered to protect from moisture. Any moisture absorbed by the fleece-backing must be removed by using a wet-vac system, prior to membrane mopping.

I. When specified, insulation must be stored so it is kept dry and is protected from the elements. Store insulation on a skid and completely cover with a breathable material such as tarp or canvas. If the insulation is lightweight, it should be weighted to prevent possible wind damage.

J. When Flexible DASH Adhesive is specified for insulation attachment, refer to **Spec Supplement G-02-20 "Flexible DASH Adhesive Equipment and Set-Up Requirements"** for proper product delivery, storage and handling.

PART II PRODUCTS

2.01 General

The components of this roofing system are to be products of Versico or accepted by Versico as compatible. The installation, performance or integrity of products by others, when selected by the specifier and accepted as compatible by Versico is not the responsibility of Versico and is expressly disclaimed by the Versico Warranty. Other components (asphalt and pressure relief vents) which are not supplied by Versico, when required for the installation of this roofing system, may be included as part of the Versico Warranty.

2.02 Membrane

A. VersiFleece AC TPO Membranes

The membrane incorporates 45-mil, 60-mil or 80-mil thick VersiWeld (white) reinforced TPO laminated to 10 ounce per square yard, non-woven polyester, polypropylene blended fleece resulting in a total finished sheet thickness of 120-mil, 135-mil, or 155-mil. A nominal 3" wide selvage edge is provided on one edge along the length of the membrane for hot air welding. Membranes are available in widths of 6' or 12' and a length of 75' and conform to the following physical properties:

Physical Property	Test Method	SPEC. (Pass)	Typical
Tolerance on Nominal Thickness %	ASTM D 751	+/-10	+/-10
Thickness of reinforced sheet over fleece min 120-mil (3.05mm) 135-mil (3.43mm) 155-mil (3.94mm)	ASTM D4637 Annex	.030 (.762) .045 (1.14) .080 (2.03)	.045 (1.14) .060 (1.52) .080 (2.03)
Weight lb/ft^2 (kg/m^2) 120-mil (3.05mm) 135-mil (3.43mm) 155-mil (3.94mm)			.31 (1.51) .40 (1.95) .50 (2.44)
Breaking Strength, min, lbf (N) 120-mil (3.05mm) 135-mil (3.43mm) 155-mil (3.94mm)	ASTM D751 Grab Method	90 (0.4)	300 (1.3) 400 (1.8) 425 (1.9)
Elongation at break of internal fabric, %	ASTM D751		25
Puncture Resistance, Joules 120-mil 135-mil 155-mil	ASTM D5635		17.5 22.5 30.0
Puncture Resistance, lbf 120-mil 135-mil 155-mil	FTM 101C Method 2031	350 400 425	525 575 600
Brittleness point, max, °F (°C)	ASTM D2137	-40 (-40)	-50 (-46)
Linear Dimensional Change,%	ASTM D1204	+/- 1 max	-0.2 typical
Field seam strength, lbf/in. (kN/m) 120-mil 135-mil 155-mil	ASTM D1876 Tested in peel	25 (4.4) 25 (4.4) 40 (7.0)	40 (7.4) 60 (10.5) 70 (12.3)
Water vapor permeance, Perms	ASTM E96 proc.B		0.10 max 0.05 typical
Resistance to microbial surface growth, rating (1 is very poor, 10 is no growth)	ASTM D3274		9-10 typical
Properties after heat aging, 670 hrs @ 240°F Breaking Strength, % retained Elongation Reinf. % retained Tearing Strength, % retained Weight Change, %	ASTM D573		90 min 90 min 60 min +/- 1.0 max
Ozone Resistance*, 100 pphm, 168 hours	ASTM D1149	No Cracks	No Cracks
Resistance to Water Absorption * After 7 days immersion @ 158°F (70°C) Change in mass, max, %	ASTM D471	+4	+2
Resistance to Outdoor (Ultraviolet) Weathering Xenon-Arc, total radiant exposure @ 0.70 W/m^2 irradiance, 80°C black panel temp 120-mill (17,640 kJ/m^2), 135-mil (20,160 kJ/m^2), 155-mil (27,720 kJ/m^2)	ASTM G155	No cracks or loss of breaking or tearing strength	No cracks or loss of breaking or tearing strength
* Not a Quality Control Test due to the time required for the test or the complexity of the test. However, all tests are run on a statistical basis to ensure overall long-term performance of the sheeting.			

B. VersiFleece KEE HP Membrane

The membrane incorporates 50-, 60- or 80-mil thick Polyester Reinforced Elvaloy KEE HP PVC membrane laminated to a 55-mil non-woven fleece backing resulting in a total finished sheet thickness of 105-, 115, or 135- mils. Membrane sheets are available in rolls 10' wide by 100' long for 105- and 115-mil and 10' wide by 75' long for 135-mil. VersiFlex VersiFleece KEE HP Membrane is available in white, gray and tan and conforms to the following:

Property	Test Method	VersiFleece KEE HP PVC 105-mil	VersiFleece KEE HP PVC 115-mil	VersiFleece KEE HP PVC 135-mil
Thickness of reinforced sheet over fleece, in. (mm)	ASTM D 4434	0.050 min. (1.27)	0.060 typ. (1.52)	0.080 typ. (2.03)
Thickness over scrim, in. (mm)	ASTM D 4434	0.024 min. (0.61)	0.029 typ. (0.74)	0.036 typ. (0.91)
Breaking Strength (MD x CD), lbf (kN/m)	ASTM D 751	410 x 360 (72 x 63)	450 x 410 (79 x 72)	500 x 490 (87 x 86)
Elongation break of reinforcement (MD x CD), %	ASTM D 751	35 x 30	35 x 30	35 x 30
Tearing Strength (MD x CD), lbf (N)	ASTM D 751	120 x 150 (534 x 222)	120 x 150 (534 x 222)	120 x 150 (534 x 222)
Low Temperature Bend	ASTM D 2135	PASS (-40º C)	PASS (-40º C)	PASS (-40º C)
Linear Dimensional Change, %	ASTM D 1204	0.4 typ.	0.4 typ.	0.4 typ.
Water Absorption Resistance, mass %	ASTM D 570	1.25	0.87	0.89
Puncture Resistance, Dynamic, J (ft-lbf)	ASTM D 5635	PASS	PASS	PASS
Puncture Resistance, Static, lbf (N)	ASTM D 5602	PASS	PASS	PASS
Xenon-Arc Resistance 12,600 kJ/m^2 total radiant exposure 10,000 hrs	ASTM G 155	PASS	PASS	PASS
Properties After Heat Aging, Breaking Strength, % retained	ASTM D 3045	90 min.	90 min.	90 min.
Properties After Heat Aging, Elongation Reinf., % retained	ASTM D 3045	90 min.	90 min.	90 min.

2.03 Insulation / Underlayment

A. **Product Information**

1. **Versico Polyisocyanurate**

a) **Versico VersiCore MP-H Polyiso** – A foam core insulation board covered on both sides with a medium weight fiber-reinforced felt facer meeting ASTM C 1289-06, Type II, Class 1, Grade 2 (20 psi) or Grade 3 (25 psi). The product is available in 4' x 8' standard size with a thickness from 1 to 4 inches. 4' x 4' tapered panels are also available.

b) **Versico SecurShield Polyisocyanurate**– A foam core insulation board covered on both sides with a coasted glass fiber mat facer meeting ASTM C 1289-06, Type II, Class 2, Grade 2 (20 psi) or Grade 3 (25 psi). The product is available in 4' x 8' standard size with a thickness from 1 to 4 inches. 4' x 4' tapered panels are also available. These flat board products feature a dark-colored coated-glass facer (CGF) on one side of the insulation board and a light-colored CGF on the other, labeled Ready Flash. Ready Flash Technology allows applicators to manage adhesive flash-off times by choosing between two different-colored facers on every board.

c) **Versico DuraFaceR Polyiso Composite (OSB)** – Polyiso insulation bonded on the bottom side with a medium weight fiber-reinforced felt face and laminated with a top surface of 7/16" or 5/8" thick Oriented Strand Board (OSB) meeting ASTM C1289, Type V, Class1 Grade 2 (20 psi) or Grade 3 (25 psi). Available in 4' x 8' boards with thickness from 1-1/2" to 4".

d) **Versico SecurShield HD Composite** – Composite insulation panel comprised of ½-inch high-density (109 psi max.) Polyiso cover board laminated during the manufacturing process to SecurShield rigid Polyiso roof insulation meeting ASTM C1289 Type II, Class 2, Grade 2 (20 psi) or Grade 3 (25 psi). Available in 4' x 8' boards with thickness from 2" to 4.5". 4' x 4' panels are also available.

2. **Versico Cover Boards**

a) **Securock Cover Board** – A uniform composition of fiber-reinforced gypsum, without a facer, for use as a cover board or a thermal barrier. Available in1/4” to 5/8” thick and 4’ x 4’ or 4’ x 8’ size boards. Long uninterrupted runs (>200’) may require slight gapping due to thermal expansion.

b) **Versico Recovery Board** - A 1/2” or 1” thick high-density wood fiberboard with an asphalt coated facer for use as a cover board or recover board. Available1/2” or 1” thick and 4’ x 4’ or 4’ x 8’ size boards.

c) **DensDeck Prime** –gypsum core that incorporates glass-mat facings on the top and bottom side. The top surface is pre-primed and provides excellent bond strength for fully adhered membrane for use as a cover board. Available in1/4” to 5/8” and 4’ x 4’ or 4’ x 8’ size boards. Only for use with cold applied systems.

d) **DensDeck StormX Prime** – a reinforced gypsum cover board with an enhanced, moisture-resistant core and coated glass mat facers on the top and bottom side. The top surface is pre-primed and provides excellent bond strength for adhered membrane for use as a cover board. DensDeck StormX Prime is extremely durable and is approved for use in assemblies meeting FM’s Very Severe Hail (VSH) Classification. Available in 5/8” thickness and 4’ x 4’ or 4’ x 8’ size boards.

3. **Versico Base Sheets**

Insulations / Underlayment	Minimum Thickness	ASTM	Roofing System Acceptability	
			Hot Mopped	Cold Applied
Base Sheets				
SureMB 120TG Base Ply	120-mil	D6163 Type I, Grade S	√	√
SureMB 90 Base Ply	90-mil	D6163 Type I, Grade S	√	√
SureMB 90TG Base	94-mil	D6163 Type I, Grade S	√	√
SureMB 70 SA Base Ply	70-mil	D6163 Type I, Grade S	√	√
SureMB Vented Base	-	D4897 Type II	√	√
SureMB G2 Base Sheet	-	D4061 Type II	√	√
FR Base Sheet 1S	-	D4869 Type I or II	√	√
Versico Type IV Glass Ply Felt	-	D2178 Type IV	√	√
Versico Type VI Glass Ply Felt	-	D2178 Type VI	√	√

Notes: N/A = Not Acceptable √ = Acceptable

Base sheets may be installed directly under insulation or membrane and may be fastened with appropriate fasteners and plates over wood, fibrous cement, gypsum or lightweight insulated concrete. The base sheet may also be mopped directly to a primed concrete deck. Refer to Warranty Table II in this Specification for Warranty terms.

a) **SureMB 120TG Base –** 120-mil smooth-surfaced, torch-grade SBS base ply, reinforced with a non-woven polyester mat that is saturated and coated with asphaltic bitumen and SBS elastomers that meets ASTM D6163 Type I, Grade S for SBS-modified bituminous sheet materials. Designed for use as a base-ply or inter-ply in Versico’s multiple-ply system and may be used as an air barrier, vapor barrier or temporary (Up to 60 days) roof. Available in 39-3/8" wide and 32’-9” long (107 square feet) weighing 0.79 lbs per square foot.

b) **SureMB 90 Base Ply** – 90-mil Glass fiber, reinforced, SBS-modified asphalt, base sheet that meets ASTM D 6163 Type I, Grade S for SBS-modified bituminous sheet materials. May be used as an air barrier, vapor barrier and temporary (Up to 60 days) roof. Available in 39-3/8" wide and 49’-1” long (161 square feet) weighing 0.58 lbs per square foot.

c) **SureMB 90TG Base** – 94-mil smooth-surfaced, SBS, torch-applied membrane. Reinforced with a fiberglass mat that is saturated and coated with asphaltic bitumen and SBS elastomers which meets ASTM D6163 Type I, Grade S. SureMB 90TG is designed for use as a base-ply or inter-ply in Versico’s multiple-ply system and can be used as an air barrier, vapor barrier or temporary (Up to 60 days) roof. Available in rolls 39-3/8” wide and 49’-1” long (164 square feet) and weighing 0.57 lbs per square foot.

d) **SureMB 70 SA Base Ply** – 70-mil smooth surface, self-adhered base ply. Reinforced with a fiberglass mat that is saturated and coated with asphaltic bitumen and SBS elastomer and meets ASTM D6163 Type 1, Grade S. 70 SA is designed to be used as a base ply or interplay in Versico’s multiple-ply system and can be used as an air and vapor barrier or temporary (up to 60 days) roof.

e) **SureMB Vented Base** – A heavyweight venting base sheet constructed from a fiberglass mat coated with weathering-grade asphalt which meets ASTM D4897 Type II and UL-G2. Typically used as a venting base sheet over lightweight insulating concrete or gypsum decks, used in conjunction with Versico Dual Prong Base Sheet Fastener. Available in rolls 39-3/8" wide and 33' long (100 square feet) and weighing 0.86 lbs per square foot.

f) **SureMB G2 Base Sheet** - A non-porous 28 pound base sheet that meets ASTM D4601 Type II and UL-G2 which is mechanically fastened (using Versico approved fasteners) to the lightweight concrete, gypsum, or tectum substrate as the base ply with subsequent layers of SureMB G2 base sheet, Type IV, or Type VI Glass felt mopped to achieve a vapor/air retarder. Available in rolls 36" wide and 108' long (324 square feet) and weighing 0.11 lbs per square foot.

g) **FR Base Sheet 1S –** A non-asphaltic fiberglass-based underlayment that meets ASTM D4869 Type I or II. In hot-mopped systems, FR Base Sheet can provide a suitable substrate for deck types requiring a fastened base. FR Base Sheet is also an ideal substrate for direct applications of hot-mopped systems or mechanically-fastened (using Versico approved fasteners) systems over wood, tectum, gypsum and lightweight concrete decks. Available in rolls 48" wide and 250' long (1,000 square feet) weighing 0.09 lbs per square foot.

h) **Versico Type IV Glass Ply Felt** - A heavyweight fiberglass mat containing heat-cured resinous binders saturated with type IV asphalt to meet ASTM D2178 Type IV and UL-G1, mopped over a nailed base sheet, a concrete deck, or an approved surface (minimum two plies) achieving a vapor/air retarder. When installed in a two ply format, Type IV Glass Ply Felt may be used as a temporary (Up to 90 days) roof. Available in rolls 36" wide and 180' long (540 square feet) weighing 0.09 lbs per square foot.

i) **Versico Type VI Glass Ply Felt** - A heavyweight fiberglass mat containing heat-cured resinous binders saturated with type IV asphalt to meet ASTM D2178 Type VI and UL-G2, mopped over a nailed base sheet, a concrete deck, or an approved surface (minimum two plies) achieving a vapor/air retarder. When installed in a two ply format, Type VI Glass Ply Felt may be used as a temporary (Up to 90 days) roof. Available in rolls 36" wide and 180' long (540 square feet) weighing 0.10 lbs per square foot.

2.04 Related Materials

A. Hot Asphalt

Asphalt (ASTM D 312): Type III or IV Hot Asphalt is typically specified for this roofing system and shall conform to the physical properties listed below. As an option, Modified SBS or SEBS Asphalt may be used when conforming to the requirements as follows:

Property/ASTM	Type III	Type IV	Modified Asphalt
Softening Point (°F) D-36	Min. – 195 Max. – 205	Min. – 210 Max. – 225	Min. – 215 Max. – 235
Flash Point (°F) D 92	Min. – 525 Max. – 600	Min. – 525 Max. – 600	Min. – 525 Max. – 600
Penetrations Units D 5	@ 32°F = 6 @ 77°F = 16-24	@ 32°F = 6 @ 77°F = 13-22	@ 32°F = 7 @ 77°F = 18
Ductility @ 77°F, cm D 113	3.0	2.0	7.0
Solubility in Trichloroethylene % D 2042	99.8	99.8	97.5

B. Cut Back Asphalt Primer

CCW-550 Primer is a Cut Back Asphalt Primer that meets ASTM D 41 and is used to prime structural concrete decks, existing smooth BUR, mineral surfaced cap sheet, or modified bitumen membranes prior to mopping. Coverage rate is 1 to 2 gallons per 100 square feet depending on surface porosity.

CAUTION: Curing compounds used in conjunction with concrete decks must be confirmed by the concrete curing compound manufacturer as compatible with this attachment method. Certain curing compounds develop a wax-like seal or oil coating on the concrete's surface that can prevent asphalt from adhering to the substrate.

C. Cold Applied Adhesive

Versico's Cold Applied Adhesive is an asphalt-modified polyether Low-VOC adhesive. This product is a one sided, wet lay-in adhesive with VersiFleece AC and VersiFleece KEE HP Membranes. Coverage rate is 1.5 gallons per

square or 67 square feet (6.2 sq m) (26-mil) per gallon for smooth surfaces and 50 square feet (4.6 sq m) (32-mil) for uneven or semi-absorbent surfaces. Coverage rates are average and may vary due to conditions such as insulation type, surface, air temperature, and equipment (spreader), type of squeegee or paint roller.

D. **Primers, Adhesives, Sealants and Cleaners**

Refer to Technical Data Bulletins for material coverage rates and proper usage. Prior to the use of any of the products listed below, consult the Material Safety Data Sheets for applicable cautions and warnings.

1. **Cut Back Asphalt Primer: CCW-550 Primer** is a Cut Back Asphalt Primer that meets ASTM D41 and is used to prime structural concrete decks, existing smooth BUR, mineral surfaced cap sheet, or modified bitumen membranes prior to mopping. Coverage rate is 1 to 2 gallons per 100 square feet depending on surface porosity.

   CAUTION: Curing compounds used in conjunction with concrete decks must be confirmed by the concrete curing compound manufacturer as compatible with this attachment method. Certain curing compounds develop a wax-like seal or oil coating on the concrete's surface that can prevent asphalt from adhering to the substrate.

2. **Cold Applied Adhesive:** Versico's Cold Applied Adhesive is an asphalt-modified polyether VOC free adhesive. This product is a one sided, wet lay-in adhesive with VersiFleece AC and VersiFleece KEE HP Membranes. Coverage rate is 1.5 gallons per square or 67 square feet (6.2 sq m) (26-mil) per gallon for smooth surfaces and 50 square feet (4.6 sq m) (32-mil) for uneven or semi-absorbent surfaces. Coverage rates are average and may vary due to conditions such as insulation type, surface, air temperature, and equipment (spreader), type of squeegee or paint roller.

3. **Versico Weathered Membrane Cleaner:** A clear, solvent-based cleaner used to loosen and remove dirt and other contaminants from the surface of exposed membrane for splicing procedures at an approximate coverage rate of 400 square feet per gallon (one surface). Available in 1 and 5-gallon pails.

4. **Water Cut-Off Mastic:** A one-component, low viscosity, self- wetting, Butyl blend mastic used to prevent moisture migration at drains, compression terminations and beneath conventional metal edging at a coverage rate of approximately 10' per tube.

5. **Universal Single-Ply Sealant:** A 100% solids, solvent free, VOC free, one part polyether sealant that provides a weather tight seal to a variety of building materials. It is white in color and is used for general caulking such as above termination bars and metal counter flashings and at scuppers.

6. **Low-VOC Bonding Adhesive 1168:** This product meets the <250 gpl VOC (volatile organic compound) content requirements of the OTC Model Rule for Single Ply Roofing Adhesives. A high strength, solvent-based contact adhesive for bonding of TPO membrane to various substrates. Apply at a rate of 60 square feet per gallon finished surface. Available in 5-gallon cans.

   NOTE: **This product <u>complies</u> with Southern California counties with additional restrictions on solvents. See Versico's Technical Data Bulletin for a listing of the counties involved**.

7. **Aqua Base 120 Bonding Adhesive:** A semi pressure-sensitive water based adhesive; used as a 2-sided contact adhesive for bonding VersiGard and VersiWeld TPO membranes to various surfaces. Complies with the South Coast Air Quality Management District Rule 1168.

8. **Low-VOC EPDM and TPO Primer -** A Low-VOC (volatile organic compound) primer (less than 250 grams/liter) for priming of EPDM or TPO surfaces prior to application of FAT, Cover strip, SecurTAPE and all other pressure-sensitive products. Available in 1 gallon pails.

   NOTE: This product <u>does not comply</u> with Southern California counties with additional restrictions on solvents. See Versico's Technical Data Bulletin for a listing of the counties involved.

9. **VersiWeld Products**

   a) **VersiWeld Bonding Adhesive:** A high-strength, synthetic rubber adhesive used for bonding VersiWeld membrane to various surfaces. The adhesive is applied to both the membrane and the substrate at a coverage rate of approximately 60 square feet per gallon per finished surface (includes coverage on both surfaces).

   b) **Cut-Edge Sealant:** A clear sealant used to seal cut edges of reinforced VersiWeld membrane. A coverage rate of approximately 225 - 275 linear feet per squeeze bottle can be achieved when a 1/8" diameter bead is applied.

   c) **White One-Part Pourable Sealer:** A one-part, moisture curing, elastomeric polyether sealant used to fill TPO Molded Pourable Sealant Pockets. Packaged in 4, 2-liter foil pouches inside a reusable plastic bucket. 1 pouch will fill 2 TPO Molded Pourable Sealant Pockets**.**

d) **TPO Primer:** A solvent-based primer used to prepare the surface of VersiWeld Membrane prior to application of Pressure-Sensitive Cover strip and TPO Pressure-Sensitive RUSS.

e) **TPO Low-VOC Primer:** A solvent-based, low solids primer used to prepare the surface of VersiWeld Membrane prior to application of Pressure-Sensitive Cover strip and TPO Pressure-Sensitive RUSS.

10. **VersiFlex Products**

a) **Low-VOC PVC Bonding Adhesive:** A high-strength, synthetic rubber adhesive used for bonding VersiFlex membrane to various surfaces. The adhesive is applied to both the membrane and the substrate at a coverage rate of approximately 60 square feet per gallon per finished surface (includes coverage on both surfaces).

b) **PVC Cut-Edge Sealant:** A clear sealant used to seal cut edges of reinforced VersiFlex membrane. A coverage rate of approximately 225 - 275 linear feet per squeeze bottle can be achieved when a 1/8"diameter bead is applied. The use of cut edge sealant to seal cut edges of VersiFlex membrane is not required.

c) **White One-Part Pourable Sealer:** A one-part, moisture curing, elastomeric polyether sealant used to fill Molded Sealant Pockets. Packaged in four 1/2 gallon pouches per plastic bucket. One pouch will fill 122 cubic inches of volume within a molded sealant pocket.

d) **PVC and KEE HP Membrane Cleaner:** Used to prepare PVC and KEE HP PVC membrane that has been exposed to the elements for approximately 7 days prior to hot air welding or to remove general construction dirt. Approximate coverage rate of 400 square feet per gallon (one surface).

e) **VersiFlex Low-VOC PVC Step 1 Activator:** A high-strength, solvent-based activator that allows PVC Pressure-Sensitive (PS) Cover Strip to be bonded to VersiFlex PVC or KEE HP membranes. Low-VOC PVC Step 1 Activator meets the < 250 gpl VOC content requirements of the OTC Model Rule. It is specially formulated using a blend of VOC-exempt and non-exempt solvents and follows the state of California Clean Air Act of 1988 (updated in 1997) as further regulated by California's Air Quality Control Districts listing VOC limitations.

f) **VersiFlex Low-VOC PVC Step 2 Primer:** A high-solids-content, polymer based splice primer. This product is applied to KEE HP and PVC membranes to improve the adhesion of PVC Pressure-Sensitive Cover Strip. Low-VOC PVC Step 2 Primer meets the < 250 gpl VOC content requirements of the OTC Model Rule.

g) **VersiFlex PVC Step 2 Primer:** A high-solids-content, clear (translucent color), polymer-based splice primer used to prepare KEE HP and PVC membranes to be bonded to PVC Pressure-Sensitive Cover Strip.

2.05 Fastening Components

A. **Fasteners**

The following Table illustrates criteria for fastening of Versico Insulation with the referenced roof deck and includes minimum penetration requirements and pilot hole criteria.

Insulation/ Base Sheet Fastening Criteria

Deck Type	Versico Fasteners (1)	Min. Penetration	Pilot Hole Depth	Pilot Hole Diameter
Steel or Lightweight Insulating Concrete over Steel	ASAP or InsulTite	3/4"	N/A	N/A
Structural Concrete, rated 3,000 psi or greater	CD-10	1"	Note (2)	7/32"
	MP 14-10	1"	Note (2)	3/16"
Wood Plank, min. 15/32" thick Plywood or min. 7/16" OSB	HPV, ASAP or InsulTite	Min. 1" (3)	N/A	N/A
Cementitious Wood Fiber	Polymer Gyptec or Dual Prong Fastener(6)	1-1/2"	Note (4)	N/A
Gypsum	Polymer Gyptec or Dual Prong Fastener(6)	1-1/2"	Note (2)	7/16", 1/2" or 9/16" (5)

Notes:
N/A = Not Applicable
(1) Only 3" diameter insulation fastening plates can be used for insulation attachment.
(2) The pilot hole must be predrilled to a sufficient depth to prevent contact between the fastener point and any accumulated dust in the predrilled hole. This will help prevent bottoming out of the fastener during installation.
(3) For wood planks only, fastener penetration shall not exceed 1-1/2".
(4) Most cementitious wood fiber decks do not require pre-drilling; however, Versico should be contacted prior to installation for verification of specific types that may require a pilot hole to be predrilled.
(5) Pilot hole size may be varied to maximize pullout resistance.
(6) For Base Sheet Attachment Only.

1. **Versico Dual-Prong Fastener** – A factory pre-assembled, 1.8” long fastener consisting of a precision tube formed from galvanized (G-90) coated steel, a 2.7” diameter disk formed from Galvalume (AX-55) coated steel and a locking staple of high tensile steel wire used to secure base sheets to cementitious wood fiber, lightweight concrete, and gypsum providing 70 lbs. of pullout resistance is achieved (40 lbs. Min.). **Used for Versico Base Sheet Securement when specified.**

2. **InsulTite Fastener:** A threaded Phillips drive fastener used with Versico insulation plates for insulation attachment to steel or wood decks. **Used for Versico Insulation attachment when specified.**

3. **HPV Fastener:** A threaded E-coat square drive fastener. Used in conjunction with Versico 3” diameter Metal plate for insulation securement or 2” diameter Seam fastening plates for base securement at angle change.

4. **HPVX Fastener**: A heavy duty #15 threaded fastener with a #3 Phillips drive used with Versico’s HPVX Fastening Plate for membrane securement at angle change or in conjunction with Versico 3” diameter Metal plate for insulation securement.

5. **Pre-Assembled ASAP Fastener:** Versico’s InsulTite Fastener pre-assembled with a 3" diameter plastic plate used **for insulation attachment only**. Installed using Olympic Fasteners’ Fastening Tool.

6. **CD-10 Fastener:** A hammer-driven, non-threaded E-Coat fastener for use with structural concrete decks rated 3,000 psi or greater.

7. **MP 14-10 Concrete Fastener:** A #14 threaded fastener with a #3 Phillips drive used for minimum 3,000 psi concrete decks.

8. **Polymer Gyptec Fastener:** A glass-filled nylon auger fastener designed for securing insulation and/or membrane to specialty decks such as cementitious wood fiber or gypsum.

9. **Insulation Adhesive:** Refer to **Spec Supplement P-01-20 “Related Products”.**

10. **Term Bar Nail-In:** A 1-1/4" long expansion anchor with threaded drive pin used for fastening Versico Termination Bar or Seam Fastening Plates to concrete, brick or block walls. The fastener is set by hammering

the drive pin into place.

B. **Fastening / Insulation Plates**

1. **Insulation Fastening Plates**: A nominal 3" diameter metal plate used for insulation attachment in conjunction with the appropriate Versico Fastener.

2. **Seam Fastening Plates**: A 2" diameter metal plate used for membrane securement.

3. **HPV-XL Plates:** A 2-3/8" diameter metal barbed fastening plate used with Versico HPVX, CD-10 or MP 14-10 Fasteners for membrane or insulation securement.

4. **Gyptec Plates:** A 3" (26 gauge) steel plate for insulation and a 2" (22 gauge) steel plate for membrane attachment. The plates are stamped galvalume-coated steel.

2.06 Other Products

A. **Flashing Accessories**

1. **VersiWeld Products**

a) **VersiWeld Flashing**: VersiWeld non-reinforced flashing is available in rolls 12" and 24" wide by 50' long. Flashing is used for inside/outside corners and field fabricated pipe flashings when the use of pre-molded or pre-fabricated accessories is not feasible. VersiWeld reinforced membrane flashing is available in 45-mil 6" wide by 100' long rolls and 60-mil 9" wide by 50' long rolls for overlaying fasteners/fastening plate and end laps.

b) **Pressure-Sensitive Cover Strip:** A nominal 40-mil thick non-reinforced TPO membrane laminated to nominal 35-mil thick cured synthetic rubber pressure-sensitive adhesive used in conjunction with TPO Primer or Low-VOC TPO Primer to strip in flat metal flanges (i.e., drip edges or rows of fasteners and plates). Available in rolls 6" wide by 100' long rolls in colors of white, gray or tan. Not for use on 25—year or 30-year Warranty projects.

c) **TPO T-Joint Covers:** A 60-mil thick injection molded TPO flashing formed into a 4.5" diameter circle used to seal step-offs at splice intersections. Installation is mandatory on all 60, 72, and 80-mil TPO membrane systems and on 45-mil systems where step-offs have not been properly sealed. Packaged in boxes of 100.

d) **Pre-Molded Accessories:** A complete line-up of pre-fabricated VersiWeld TPO accessories including corners, curb wraps, pipe seals, sealant pockets, and walkway pads. For product information, refer to **Spec Supplement P-01-20 "Related Products"**.

B. **One-Way Relief Vents**

Vents are required when the membrane is adhered over lightweight insulating concrete at the rate of 1 every 1,000 square feet for vermiculite and 2,000 square feet for cellular or perlite lightweight insulating concrete decks.

a. **Non-Weldable One-Way Pressure Relief Breather Vent:** 8" tall, spun aluminum vent with a base diameter of 11" and stack diameter of 5". Engineered to allow moisture and air to escape from within the roofing system. May be used in conjunction with Versico's DeckVent EPS Insulation for a roof assembly over Lightweight Structural Concrete (See **Spec Supplement G-14-19**) or in conjunction with VersiFleece AC (EPDM and TPO) membranes over Lightweight Insulating Concrete (See **Spec Supplement G-03-19**).

b. **Weldable One-Way Pressure Relief Breather Vent:** 5.5" tall, stainless steel vent with a 60-mil weldable flange, a base diameter of 14" and stack diameter of 4". Engineered to allow moisture and air to escape from within the roofing system. May be used in conjunction with Versico's DeckVent EPS Insulation for a roof assembly over Lightweight Structural Concrete (See **Spec Supplement G-14-19**) or in conjunction with VersiFleece AC (EPDM and TPO) membranes over Lightweight Insulating Concrete (See **Spec Supplement G-03-19**).

2.07 Roof Walkways

Walkways are to be specified at all traffic concentration points (i.e., roof hatches, access doors, rooftop ladders, etc.), and if regular maintenance (once a month or more) is necessary to service rooftop equipment.

1. **Walkway types:**

a) **VersiWeld Heat Weldable Walkway Rolls:** Designed to protect VersiWeld membrane in those areas exposed to repetitive foot traffic or other hazards. Walkway material may be heat welded to VersiWeld membrane using an automated heat welder or hand held heat welder. The diamond plate tread pattern offers superior slip resistance. The walk edges are trimmed in safety yellow to better define the designated traffic flow. Walkway Rolls are 34” wide by 50' long and are nominal 180 mils thick. Available in white, tan or gray.

b) **Versico Interlocking Rubber Pavers,** 24" X 24" X 2" thick rubber paver weighing approximately 24 pounds per unit, 6 pounds per square foot manufactured from recycled rubber, which provides a resilient, shock absorbing, weather resistant surface. Designed primarily for use as a walkway or on terrace areas offering a unique, environmentally sound advantage over concrete pavers. Features include freeze/thaw stability, bi-directional drainage and no breakage concerns. Available in black and terra cotta.

c) **Hanover Pedestal Paver,** Used for light traffic areas associated with rooftop or garden roof applications. 23-1/2” x 23-1/2” x 2” thick precast concrete pavers weighing 25 psf with an elevated clearance of 1/2” from incorporated footing. Available in 8 standard colors, with special order colors available. The pedestal paver can either be installed in conjunction with a separation layer of HP Protective Mat or using Hanover Pedestal and shims

d) **Hanover Ballast and Lightweight Ballast Pavers,** The standard, 24” x 24” x 1-13/16” thick, Ballast Paver comes in a natural color and a non-slip Diamond finish and weighs 22 lbs/sq. ft. The Lightweight, 23-1/2” x 23-1/2” x 1-1/4” thick, Ballast Paver comes in a natural color and a non-slip diamond finish and weighs 15 lbs/sq. ft. Both pavers can be used as ballast or walkways.

2.08 Edging And Terminations

A. **Refer to Spec Supplement P-01-20” Related Products”.**

PART III EXECUTION

Prior to commencing with the installation of any of the Thermoplastic Membrane Systems refer to Paragraph 1.06 "Warranty Tables" for applicable components and proper securement method suitable for the appropriate warranty coverage.

Requirements listed in this specification are considered minimum and are intended for the sole purpose of obtaining a Versico Warranty. Additional requirements dictated by Regulatory Agencies, Building Insurance or Specifiers must be complied with and are considered to be beyond the scope of this specification.

3.01 General

A. Safety Data Sheets (SDS) must be on location at all times during transportation, storage, and application of materials. The contractor shall follow all safety regulations as recommended by OSHA and other agencies having jurisdiction.

B. Subject to project conditions, it is recommended to begin application of this roofing system at the highest point of project area and work to lowest point to prevent water infiltration. This will include completion of all flashings, terminations, and daily seals.

C. Consult the Asphalt Manufacturer concerning asphalt heating temperature and minimum ambient temperature during installation.

D. Do not apply Cold Applied Adhesive when ambient temperatures are below 40°F (5°C).

E. Opened containers of Cold Applied Adhesive should be used with 2-3 weeks. The adhesive will form a thick surface skin that will not re-dissolve. Adhesive can be used once the skinned layer is removed.

F. Asphalt or Cold Applied Application Rate Tables

Table I

Asphalt/SEBS Application Rates	
AC Membrane	18-22 pounds per square
Base Sheet	23-25 pounds per square
Insulation	28-32 pounds per square

Table II

Cold Applied Adhesive Application Rates	
Smooth Surfaces	1.5 gal per square or 67 square feet per gallon
Uneven or Semi-absorbent	2.0 gal per square or 50 square feet per gallon

Note: Coverage rates are average and may vary due to conditions such as insulation type, surface, air, and adhesive temperatures. Coverage rates may also vary based on the spreader and or type of squeegee or paint roller used for applications. When using a spreader with the Cold Applied Adhesive, it may be necessary to squeegee or back roll adhesive to obtain proper coverage.

3.02 Roof Deck Criteria

A. **General**

1. Proper decking shall be provided by the building owner. The building owner or its designated representative must ensure that the building structure is investigated by a registered engineer to assure its ability to withstand the total weight of the specified roofing system as well as construction and live loads in accordance with all applicable codes. The specifier must also designate the maximum allowable weight and location for material loading and storage on the roof.

2. When fasteners are used to fasten the insulation, withdrawal resistance tests are strongly suggested to determine the suitability of a roof deck. Refer to **Design Reference DR-06-19 "Withdrawal Resistance Criteria"** in the Versico Technical Manual proper procedures for conducting pullout tests.

3. Defects in the roof deck must be reported and documented to the specifier, general contractor and building owner for assessment. The Versico Authorized Roofing Contractor shall not proceed unless the defects are corrected.

3.03 Substrate Preparation

A. **General**

1. For all projects (new or retrofit), the substrate must be relatively even without noticeable high spots or depressions. Accumulated water, ice or snow must be removed to prevent the absorption of moisture in the new roofing components and roofing system.

2. Prior to the placement of membrane underlayment, clear the substrate of debris and foreign material that may be harmful to the roofing system. Gaps greater than 1/4" must be filled with an appropriate material.

3. For direct application over an acceptable roof deck/substrate the substrate must be smooth, steel trowel finished (structural concrete), free of debris, protrusions, sharp edges and loose and foreign material. Cracks or voids in the substrate, greater than 1/4", must be filled with an appropriate material.

4. On retrofit - recover projects, cut and remove wet insulation, as identified by the specifier, and fill all voids with new insulation of type specified so it is relatively flush (+/-1/4") with the existing surface.

   a) Entrapment of water between the old and new membrane can damage and deteriorate new insulation/underlayment between the two membranes. If a vapor retarder or air barrier is not specified, Versico recommends the existing membrane be perforated to avoid potential moisture accumulation and to allow the detection of moisture to enable the building owner to take corrective action.

   b) For existing PVC membranes, if the membrane is not removed, it must be cut into maximum 10' by 10' sections. A new membrane underlayment must be mechanically attached and all PVC flashings at the perimeter, roof drains and roof penetrations must be removed.

   c) When installing this roofing system over existing gravel surfaced built-up roof, loose gravel must be removed. Power brooming is recommended by Versico to remove the loose gravel, which may trap moisture. Any uneven areas of the substrate must be leveled to prevent insulation from bridging.

   d) On retrofit projects, all existing phenolic insulation must be removed.

B. **Acceptable Decks/Substrates and Minimum Underlayment**

Construction Type	Acceptable Roof Deck/Substrate	Asphalt Applied	Cold Applied
Retrofit/No Tearoff	Existing Smooth Surface BUR or Mineral Surface Cap Sheet	Direct Application	Direct Application
	Gravel Surfaced BUR	Cover Board/Insulation*	Insulation*
	Coal Tar Pitch	Cover Board/Insulation*	Insulation*
	Modified Bitumen	Direct Application	Direct Application
	Existing Single-Ply	Cover Board/Insulation*	Insulation*
Retrofit/Tearoff*	Existing roof material removed (regardless of deck type)	Contact Versico	

* Refer to the Warranty Tables, Paragraph 1.06, of this specification, for the minimum underlayment requirements for a specific Warranty Coverage.

1. **Do not** adhere VersiFleece AC or VersiFleece KEE HP Membranes directly onto low melting point asphalt. When the softening point of the asphalt falls below 185°F, the minimum membrane underlayment must be a fastened 1/2 inch thick Versico Recovery Board, Securock, or an acceptable insulation.

2. For slopes less than 2 inches to one horizontal foot, the specifier must investigate the existing roofing material to ensure the asphalt has a minimum softening point of 185°F (85°C).

3. When a direct applied system is specified, the specifier should investigate previous repairs and contaminants to existing roofing material to determine if the softening point of the asphalt is below that mentioned above or other contaminants may contact the VersiFleece AC or VersiFleece KEE HP Membranes. Temporary repairs completed with any contaminants (i.e., plastic roof cement) must be removed.

4. The substrate must be relatively smooth, dry and clear of debris, fins, loose edges, foreign materials, oils, grease, frost and fresh roof cement.

5. Prepare the existing material for mopping of VersiFleece AC or VersiFleece KEE HP Membranes with CCW-550 Cut Back Asphalt Primer. For Cold Applied application, preparation by power-wash existing roofing material.

6. On retrofit-recover projects, cut and remove wet insulation as identified by the specifier and fill all voids with new insulation, so that it is relatively flush.

C. **New Construction When No Insulation Required**

Construction Type	Acceptable Roof Deck/Substrate*	Asphalt Applied	Cold Applied
New Construction	Structural Concrete (minimum 3000 psi)	Direct Application	Direct Application
	Plywood (minimum 15/32" thick) or Oriented Strand Board (minimum 7/16")	Base Sheet	Direct Application
	Wood Planks (minimum 3/4" thick)	Base Sheet	Direct Application
	Gypsum	Base Sheet	Direct Application
	Lightweight Insulating Concrete	Base Sheet	Direct Application

* On Tearoff projects, conditions may vary depending on deck type and the existing roofing system being removed. In some cases, the new membrane assembly may be directly installed to the deck or in conjunction with a Versico Supplied base sheet. (Structural concrete, gypsum deck, fibrous cement, or lightweight insulating concrete.) When a complete Tearoff is specified, Versico may be contacted for a specific applicable requirement based on warranty duration.

D. **Structural concrete deck**

1. The substrate must be relatively smooth, dry and free of protrusions, debris, frost, sharp edges and loose/foreign materials. All gaps in the substrate greater than 1/4 inch must be filled with suitable material.

2. The membrane can be mopped directly to structural concrete which has been primed with CCW-550 Cut Back Asphalt primer prior to membrane mopping.

E. **Projects with new lightweight insulating concrete**

1. When no additional insulation is required, projects with new or existing lightweight insulating concrete substrates will require the use of a Versico supplied base sheet. Refer to Warranty Table II in this Specification for the appropriate base sheet to be utilized. Follow the fastening patterns in Figure 6.

2. Except when the lightweight insulating concrete is to be poured over slotted steel decks, pressure relief vents must be specified at a minimum rate of 1 every 2,000 square feet to relieve vapor pressure which may result from possible moisture entrapment beneath the lightweight insulating concrete between the time of concrete placement and membrane installation.

3. The surface of the lightweight insulating concrete must be smooth finished, free of protrusions, sharp edges, frost, and loose/foreign materials.

4. The direct application of this roofing system is not permitted when a lightweight insulating concrete (regardless of type) is specified over an existing roofing material.

3.04 Wood Nailer Installation

A. **General**

1. Methods used to fasten the nailer vary with building conditions; however, it is essential that secure attachment of durable stock be accomplished. Factory Mutual Global Property Loss Prevention Data Sheet 1-49 (Perimeter Flashing) contains options for the spacing and sizing of fasteners.

2. The wood nailer must be installed so the top of the wood nailer is relatively flush (+/- 1/4") with the top surface of the insulation/underlayment and the width of the wood nailer exceeds the width of the metal flange (edgings, scuppers, insulated collars, etc.) as shown on the appropriate Versico detail.

3. Install wood nailers in those locations that have been designated by the specifier and as approved by Versico.

4. Follow the specifier's guidelines for securement of wood nailers.

5. Avoid fastening into existing deteriorated or dry rotted wood nailers

6. Refer to **Design Reference DR-09-20 "Wood Nailers and Securement Criteria"**.

3.05 Base Sheet and Insulation Attachment

A. **General**

1. Do not install more insulation/underlayment that can be covered by membrane and made watertight in the same day.

2. All insulation boards must be butted together with no gaps greater than 1/4 inch. Gaps greater than 1/4 inch must be filled with same material.

3. Multiple layers of insulation are recommended, with all joints staggered between layers.

4. When the VersiFleece AC or VersiFleece KEE HP membranes is to be installed in conjunction with Versico Modified Base Sheet over roof insulation, 1/2 inch Versico recovery Board or 1/2 inch Securock is required as an underlayment. The underlayment may be mopped when used in conjunction with Polyisocyanurate Insulation or mechanically attached when used with Polystyrene Insulation, see Section 2.03 of this Specification for further information.

B. **Base Sheet Attachment**

1. **For Concrete Decks**

   a) When base sheets are to be mopped to a structural concrete deck, the deck must be primed with CCW-550 Cut Back Asphalt Primer (ASTM D 41) prior to mopping base sheets. Depending on surface porosity, CCW-550 Cut Back Asphalt must be applied at a rate between of 1 to 2 gallons per 100 square feet.

   b) When specified, each layer of base sheet shall be hot mopped at the rate listed in Asphalt Application Rate Table I in Paragraph 3.01.

2. **For Gypsum, Lightweight Insulated Concrete, and Fibrous Cement Decks**

   a) Prior to installing either the VersiFleece AC or VersiFleece KEE HP membranes or insulation in asphalt, Versico Base Sheets shall be fastened into the gypsum, lightweight insulated concrete, or fibrous cement with Versico Dual Prong fasteners as shown.

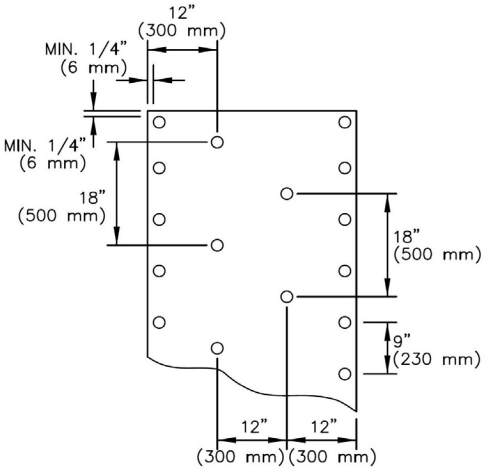

Figure 6

3. **Wood Decks (Wood Plank or Min. 15/32" thick Plywood ONLY)**

   a) When no insulation is specified and VersiFleece AC or VersiFleece KEE HP Membranes is to be directly mopped to a Versico Modified Base Sheet. The base sheet must be fastened with Versico HPV or HPVX Fasteners with 3" diameter insulation plates are used to attach the Versico Modified Base Sheet in rows 18" apart, 12" on center, refer to the fastening pattern in figure 7.

Note: Projects with OSB Deck, regardless of thickness, must be submitted to Versico for suitable securement method.

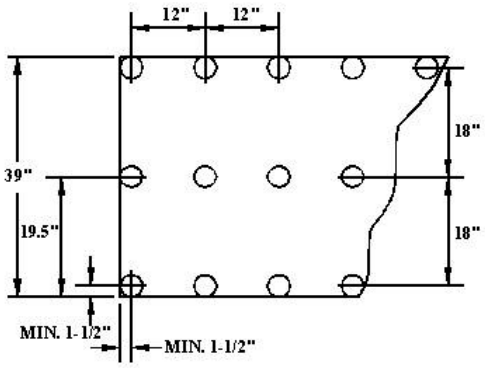

MODIFIED BASE SHEET FASTENING PATTERN (EXCLUDING OSB)

Figure 7

C. **Insulation Attachment**

The approved Versico Insulation may be fully adhered with asphalt, fully adhered with Flexible DASH Adhesive, or mechanically attached, as outlined in Warranty Table III of this Specification.

1. When roof insulation is to be fully adhered individual board sizes shall be limited to 4' by 4' to ensure full embedment. Board size may be extended to 4' by 8' when mechanically securement is specified. Use appropriate Versico fasteners for deck type and ensure minimum deck penetration as outlined in **Design Reference DR-06-19 "Withdrawal Resistance Criteria"**.

2. When insulation is to be mopped to a structural concrete deck, the deck must be primed with CCW-550 Cut Back Asphalt Primer (ASTM D 41) prior to mopping insulation to the deck. Depending on surface porosity, cut back asphalt must be applied at a rate between of 1 to 2 gallons per 100 square feet.

3. When specified, the insulation may be fully adhered with asphalt to a Versico Base Sheet or a primed concrete deck with Type III or IV Asphalt, or SEBS at the rate listed in Asphalt Application Rate Table I in Paragraph 3.01.

3.06 VersiFleece AC or VersiFleece KEE HP Membranes Installation

A. **General**

1. Membrane shall be stored in a dry area to prevent absorption of moisture in the fleece backing. If moisture is present, it must be removed with a wet vac system and the membrane must be allowed to fully dry prior to membrane adhesion.

2. Position membrane over the acceptable substrate without stretching and overlap adjoining sheets.

3. When overlapping adjoining VersiFleece AC or VersiFleece KEE HP Membranes, extend fleece backing approximately 1/2 inch above previously installed membrane. This will avoid direct contact between membrane in the seam area and hot asphalt or Cold Applied Adhesive.

4. Allow membrane to relax approximately 1/2 hour before Asphalt or Cold Adhesive Application.

   NOTE: Due to stiffness of the VersiWeld membrane, temporarily weigh down the ends of the membrane rolls to control re-curling of membrane until membrane lays flat.

B. **VersiFleece AC or VersiFleece KEE HP Membranes Fully Adhered with Asphalt**

1. General

   a) The temperature of the asphalt during application shall be within 25°F (-4°C) from the EVT (Equiviscous Temperature). The manufacturer's heating instructions (i.e., maximum heating temperature, prolonged storage temperature guidelines) must be strictly followed.

   b) When adhering the VersiFleece AC or VersiFleece KEE HP membranes with asphalt, refer to Asphalt Application Rate Table I in Paragraph 3.01, for coverage rates. It is important that "heavy spots" of asphalt, typically occurring at mopping overlaps or where the mop is first positioned, be avoided. At these areas, the asphalt must be spread evenly to avoid a heavy coverage rate that can cause asphalt saturation of the fleece backing. Asphalt saturation of the fleece must be avoided.

c) Adhering the VersiFleece AC or VersiFleece KEE HP membranes with asphalt directly to Polyisocyanurate insulation is not permitted. Versico Recovery Board or Securock must be used as an overlayment when insulation is specified.

2. Hand Mopping Method

a) When using a hand mop to apply asphalt, position the membrane over the substrate overlapping adjacent sheets to accommodate membrane splicing and fold in half lengthwise to expose the substrate and the back side of the membrane (full width of the membrane by approximately half the length).

b) Beginning at the membrane fold, apply asphalt to the substrate the full width of the membrane extending a maximum of 3 to 6 feet while rolling the membrane into the asphalt immediately. The asphalt temperature at the time of membrane adhesion must be above 325°F (163°C). Continue to apply asphalt for the full width of the membrane extending 3 to 6 feet at a time while embedding the membrane into the asphalt until the entire half of the sheet is fully adhered. Fold back the unbonded half of the membrane and repeat the bonding procedures identified above.

3. Asphalt Spreader Method

a) When using spreaders to apply asphalt, the membrane is folded widthwise dependent on the size of the spreader (36” – 57” wide); i.e., if a 36" wide spreader is used, the membrane will be folded to expose approximately a 36" wide by 50' long area. After the asphalt is applied in a single pass, the membrane is rolled into the asphalt. After adhering the first half of the membrane, apply asphalt to the remaining substrate area in single passes and continue to bond membrane as identified above.

b) Care must be taken to ensure the proper coverage rate is maintained. Do not overlap asphalt layers at multiple pass lines since the heavy coverage rate occurring at these overlapping areas must be avoided.

c) Membrane must be embedded into asphalt immediately after each spreader pass to ensure asphalt temperature is at least 325° F (163°C) at the time of membrane embedment.

d) Monitor that the asphalt is not dropped directly on the back of the membrane. Use a mop to spread asphalt at pass lines and under sheet folds to prevent a heavy coverage rate.

4. As the contractor installs the membrane by either method, the contractor should test embedment of membrane into the asphalt. After approximately 30 feet of membrane installed, the contractor should pull back the edge of the membrane and observe asphalt coating the white fleece in a uniform manner. If discovered that this is not occurring, the contractor should review temperature and heating process of the asphalt.

5. After membrane mopping, immediately after adhesion, brush down the sheet with a stiff bristled broom using light to medium pressure.

CAUTION: Do not use weighted rollers or heavy pressure when brooming the membrane to avoid asphalt saturation of the fleece.

Note: Foot traffic should be avoided until the asphalt has cooled sufficiently.

C. **VersiFleece AC or VersiFleece KEE HP Membranes Fully Adhered with Cold Applied Adhesive**

1. Fold the membrane widthwise and apply the adhesive to the substrate.

2. Apply Versico Cold Applied adhesive to the substrate in a bead or serpentine pattern avoiding globs, puddles and uncoated areas. Use a flat blade squeegee, paint roller, or an acceptable spreader to spread adhesive at the coverage rates specified in the Cold Adhesive Application Rate Table II in Paragraph 3.01.

3. Broom or roll with a maximum 2.5–5.0lb/inch weighted roller to achieve maximum contact (a 30" roller should weigh no more than 75 lbs). Avoid excessive rolling of the membrane. Rolling once or twice is sufficient. Use of a weighted roller is not allowed when installing Cold Applied Adhesive over an existing smooth-surface asphalt roof or when temperatures exceed 75°F (74°C). Brooming the sheet is required in this situation to avoid saturating the AC fleece. All adhesive residues in the splice area must be removed before splicing.

4. Fold back the unbounded half of the membrane sheet and repeat the bonding procedure.

5. Install adjoining membrane sheets in the same manner, overlapping edges to provide for the minimum splice width. Good roofing practice recommends all splices to be shingled to avoid bucking of water.

3.07 VersiFleece AC or VersiFleece KEE HP VersiWeld Heat Welding Procedure

A. General

1. Heat weld the VersiFleece AC or VersiFleece KEE HP membrane sheets using the Automatic Heat Welder or Hot Air Hand Welder and silicone roller.

2. When roof slope exceeds 5" per horizontal foot, use of the Automatic Heat Welding machine may become more difficult; use of the Hand Held Air Welder is recommended.

3. Check the surfaces of the membrane to be heart welded to ensure they are properly prepared.

   The surfaces to be heat welded must be clean. Membrane overlaps that become contaminated with field dirt must be cleaned with Versico Weathered Membrane Cleaner. Weathered Membrane Cleaner should be wiped dry with a clean Splice Wipe prior to welding. No residual dirt or contaminants should be evident.

B. Automatic and/or Hand Held Heat Welder Equipment

1. Refer to **Spec Supplement T-01-18 "Heat Welding Equipment"** **for:**

   a) Temperature Settings.
   b) Equipment Set-Up.
   c) Additional Information.

C. Membrane Welding

1. Prepare the Automatic Heat Welder and allow it to warm for approximately 5 to 10 minutes to reach operating temperature.

2. Position the Automatic Heat Welder properly prior to seaming with the guide handle pointing in the same direction the machine will move along the seam.

3. Lift the overlapping membrane sheet and insert the blower nozzle of the Automatic Heat Welder between the overlap. Immediately begin moving the machine along the seam to prevent burning the membrane.

4. Weight plates provided on Automatic Welders must be utilized.

5. Proceed along the seam ensuring that the small guide wheel in front of the machine aligns with the edge of the top membrane sheet. Guide the machine from the front only.

   CAUTION: Ensure the power cord has plenty of slack to prevent dragging the machine off course (which could result from a tightly stretched cord).

6. At all splice intersections, roll the seam with a silicone roller to ensure a continuous heat welded seam (the membrane should be creased into any membrane step-off with the edge of the silicone roller). A false weld may result due to surface irregularities created by multiple thicknesses of VersiFleece AC or VersiFleece KEE HP membrane sheets.

   NOTE: When using 135-mil or 155-mil VersiFleece TPO Membrane, a TPO "T-Joint" Cover must be applied over all "T-Joint" splice intersections. When VersiFleece KEE HP 115- or 135-mil membranes, a surface splice of non-reinforced flashing or "T-Joint" Cover must be applied over all "T-Joint" splice intersections.

7. To remove the Automatic Heat Welder from the finished splice, stop the movement of the machine and immediately remove the nozzle from the seam area.

8. Mark the end of the heat welded seam with a water-soluble marker for easy identification. A Hand Held Welder will be necessary to complete the weld in the area between where the Automatic Heat Welder is stopped and restarted.

D. Preventing Membrane Creeping During Welding

The operator of automatic welding equipment must apply foot pressure to the membrane, keeping the membrane tight under the welder. **Refer to** **Spec Supplemental T-01-18 "Heat Welding Equipment"** for additional information.

E. Test Cuts

Perform a test weld at least at the start of work each morning and afternoon. **Refer to** **Spec Supplemental T-01-18 "Heat Welding Equipment"** for additional information.

F. **Seam Probing**

A blunt or dull cotter pin puller is recommended to probe all heat-welded seams. Probing seams must be done once heat welds have thoroughly cooled. Refer to **Spec Supplemental T-01-18 "Heat Welding Equipment" for additional information.**

G. **Seam Sealing**

Apply Cut-Edge Sealant on all cut edges of the reinforced membrane (where the scrim reinforcement is exposed) after seam probing is completed. Cut-Edge Sealant is not required on vertical splices. When a 1/8" diameter bead of Cut-Edge Sealant is applied, approximately 225-275 linear feet of coverage per squeeze bottle can be achieved.

3.08 Welding Problems/Repairs

A. A Hand Held Hot Air Welder and a 2" wide silicone roller must be used when repairing the VersiFleece AC TPO or VersiFleece KEE HP Membrane. When the entire heat welded seam is to be overlaid, an Automatic Heat Welder may be used.

B. Prior to proceeding with any repair procedure, the area to be repaired must be cleaned with Versico Weathered Membrane Cleaner. The membrane can typically be repaired with standard cleaning methods. In cases where the standard cleaning method is not sufficient, the following procedures must be used:

1. Scrub the area to be welded with a "Scotch Brite" Pad and Weathered Membrane Cleaner.

2. Clean all residue from the area to be welded with a Splice Wipe or a clean natural fiber (cotton) rag.

3. Weld the new membrane to the cleaned area using standard welding procedures.

C. Voids in welded seams can be repaired using a Hand Held Hot Air Welder and a silicone roller. Depending on conditions, a splice overlay may be required.

D. Position the hand held welder facing into void so hot air is forced between overlapping membranes. Roll the top membrane surface using positive pressure toward the outer edge until the heated membrane surfaces are fused.

E. Exposed scrim-reinforcement (resulting from scorching surface of membrane) and test weld areas must be repaired by overlaying the damaged area with a separate piece of VersiWeld reinforced membrane with rounded corners. The overlay must extend a minimum of 2 inches past the area to be repaired.

F. Probe all edges of the overlay once cooled to ensure a proper weld has been achieved.

NOTE: The same overlay repair procedures may be used for punctures in the VersiFleece AC TPO or VersiFleece KEE HP membrane.

3.09 Additional Membrane Securement for VersiFleece AC or VersiFleece KEE HP Membrane Fully Adhered with Cold Applied

CAUTION: Regardless of membrane type, VersiFleece AC (EPDM or TPO) or VersiFleece KEE HP Membrane, when cold applied adhesive is used, securement must be provided at the perimeter of each roof level, roof section, expansion joint, curb flashing, skylight, interior wall, penthouse, etc., at any inside angle change where slope exceeds 2" in one horizontal foot, and at other penetrations in accordance with Versico's published details.

A. Approved Seam Fastening Plates may be installed horizontally into the structural deck or vertically into walls or curbs. Refer to Fastening Components Section 2.05 of this Specification for product information.

B. Securement of the VersiFleece AC or VersiFleece KEE HP Membrane with the approved Versico Fasteners and Seam Fastening Plates must be a maximum of 12" on center starting 6" minimum to 9" maximum from inside and outside corners.

C. If horizontal wood nailers are provided, along parapet walls/curbs, secure the membrane with Seam Fastening Plates to the wood nailer with Versico HPV Fasteners. Roofing nails are not acceptable for securement.

D. Broom the sheet using a stiff bristled broom applying light to medium pressure. The use of a 75lb weighted roller is optional. To avoid over-saturation of the AC fleece do not roll more than once or twice and if temperatures exceed 75° F (74° C), rolling is not allowed. All adhesive residues in the splice area must be removed before splicing.

E. After securing the Seam Fastening Plates, flash in accordance with the appropriate detail.

3.10 Flashing Considerations

In addition to listed below, **Spec Supplement G-04-20 "Flashing Considerations/Metal Work"** must be referenced for other requirements.

A. General Flashing Considerations

1. At roof drains and compression seal terminations such as terminations bars and coping stones, the fleece-backing must be removed from the back of the membrane so Water Cut-Off Mastic can be applied directly to the membrane surface.

2. Cut edges of VersiFleece AC TPO membrane or VersiWeld reinforced membrane when used for flashing), where scrim reinforcement is exposed, must be sealed with Cut-Edge Sealant (not required on vertical surfaces). The use of PVC Cut-Edge Sealant on cut edges of VersiFleece KEE HP membrane is not required.

3. Care must be taken when setting the flashing to avoid bridging greater than 3/4" at angle changes (i.e., where a parapet or roof penetration meets the roof deck). This can be accomplished by applying heat to the membrane and creasing the membrane into the angle change.

4. Adhering VersiFleece AC or VersiFleece KEE HP membrane to a wall surface with asphalt, the continuous deck membrane may be used as flashing. Care must be taken and any large drips and pools of asphalt accumulated at the base of the wall must be removed. Flashing height is limited to a maximum of 18".

5. VersiFleece AC or VersiFleece KEE HP membrane fully adhered to the wall with appropriate bonding adhesive. When applying bonding adhesive to the fleece backed membrane, apply a coast to the fleece side of the membrane and allow to completely dry. Once dry, apply bonding adhesive to the wall substrate and the back of the membrane previously coated with bonding adhesive at a coverage rate of 60 square feet per gallon (finished surface).

6. For additional flashing considerations, refer to **Spec Supplement G-04-18"Flashing Considerations/Metal Work"**.

7. **Flashing of Difficult Penetrations**, refer to **Spec Supplement G-11-18 for "LIQUISEAL Liquid Flashing"** for additional information and specific requirements.

3.11 Related Products Installation

A. **Metal Work**

Factory-fabricated metal edge systems must be secured to the wood nailer as specified by the manufacturer. Shop-fabricated edging and Versico TPO Coated Metal must be installed in compliance with appropriate Versico Detail in order to achieve ES-1 Compliance. Refer to appropriate Universal Details, **Spec Supplement G-04-21 "Flashing Considerations/Metal Work"** and **Design Reference DR-12-18 "Metal Edging"** for flashing considerations.

B. **Roof Walkways**

Walkways are to be specified at all traffic concentration points (i.e., roof hatches, access doors, rooftop ladders, etc.), and if regular maintenance (once a month or more) is necessary to service rooftop equipment. **Refer to Spec Supplement G-05-18 "Roof Walkway Installations".**

C. **Daily Seal/Clean Up Procedures**

On phased roofing, when the completion of flashings and terminations is not possible by the end of each workday, provisions must be taken to temporarily close the membrane to prevent water infiltration. For additional information refer to **Spec Supplement G-06-20 "Daily Seal/Clean Up".**

Attach copies of the applicable Versico Details that pertain to the individual project to complete a bid package submittal.

Copyright 2024 Versico Roofing Systems
Versico, VersiWeld, VersiGard, VersiFleece, VersiCore MP-H, DuraFaceR, VersiTrim, LIQUISEAL and Flexible DASH are Trademarks of Versico

Insulfoam, InsulLam and R-Tech are Trademarks of Insulfoam
Thermapink, Foamular and Durapink are Trademarks of Owens Corning
DensDeck, DensDeck Prime and DensDeck StormX Prime are Trademarks of Georgia-Pacific Corporation
Securock is a Trademark of USG
Styrofoam is Trademark of the DOW Chemical Company
Olybond is a Trademark of OMG, Inc.

This specification represents the applicable information available at the time of its publication. Owners, specifiers and Versico Authorized Roofing Contractors should consult Versico or their Versico Independent Sales Representative for any information, which has subsequently been made available.

Review the appropriate Versico warranty for specific warranty coverage, terms, conditions and limitations.

SPECIFICATION ATTACHMENT

"Attachment I"
Mechanically Attached Option
For Recover Application

January 2024

A. **Description**

The Mechanically-Attached membrane option is available when using VersiFleece AC EPDM or VersiFleece AC TPO membrane. In lieu of adhering the membrane to an approved substrate with asphalt or cold applied adhesive, the AC membrane may be mechanically attached along the side that laps over an approved substrate to an acceptable deck using the appropriate Versico Fasteners and seam plates.

B. **Approved Substrates**

Existing Type III or IV smooth built-up roofing, mineral surfaced cap sheets, or modified bitumen. Substrate must be dry and free of debris or other contaminants. For other substrates, Versico may be contacted for recommendations and specific substrate preparations and requirements.

C. **Warranty Criteria for 55-mph 15-year Membrane System Warranty**

Projects requiring extended wind speed coverage or a 20-YR System Warranty must be submitted to Versico for review prior to installation.

1. **Membrane sheet width, fastener types, and fastening density**

Membrane Type	Field Sheet Width	Perimeter Sheet Width	Fastener / Seam Plate	Fastening Density in the Seams
AC EPDM	10-ft	4.5-ft	HPV Fastener / Polymer Plate	12" o.c.
AC TPO	12-ft	6-ft	HPVX Fastener / HPVX Plate	12" o.c.

2. **Number of Perimeter Sheets**

ASCE 7 Wind Zone	Deck Type	# Perimeter Sheets*
100 mph or less	22-ga. Steel or min 1" Wood Plank Decks	2
	15/32" Plywood Decks	4
100-119 mph	22-ga. Steel or 1" Wood Plank Decks	4
	15/32" Plywood Decks	6
Projects located in Wind Zones greater than 119 mph or projects with a building height greater than 40 feet must be submitted to Versico for review prior to installation for applicable enhancements.		

* As an alternate to perimeter sheets, to match the number of rows, field sheets may be positioned around the building perimeter and a row fasteners and seam plates shall be positioned along the center of the width and secured a maximum of 12" on center. The appropriate cover strip shall be used to overlay the fasteners and plates.

** Projects incorporating other deck types should be submitted to Versico for review prior to installation.

D. **TPO Products Refer to Part II – Products in Main Specification**

E. **EPDM Products**

1. **EPDM AC Membranes**

The membrane incorporates 45-mil or 60-mil thick non-reinforced EPDM laminated to 7.5 ounce per square yard, non-woven polyester polypropylene blended fleece resulting in a total finished sheet thickness of 90-mil or

105-mil. Black membrane is available in 5' or 10' wide and lengths 50' or 100'. AC membranes conform to ASTM Standard D 4637-95, Type III (Fabric-backed membrane) with the following physical properties:

Physical Property	Test Method	SPEC.(Pass)	Typical
Tolerance on Nominal Thickness, %	ASTM D 751	±10	±10
Thickness over Fleece, min, in. (mm) 90 mil (2.286 mm) 105 mil (2.667 mm)	ASTM D4637 Annex	.030 (.762) .045 (1.143)	.045 (1.143) .060 (1.524)
Weight 1b/ft^2 (kg/m^2) 90 mil (2.286 mm) 105 mil (2.667 mm)			0.29 (1.42): VersiGard 0.38 (1.86): VersiGard
Breaking Strength, min, lbf (N)	ASTM D751 Grab Method	90 (400)	200 (890)
Elongation, Ultimate, min, %	ASTM D 412	300 **	480 **
Tearing Strength, min, lbf (N)	ASTM D 751 B Tongue Tear	10 (45)	45 (200)
Brittleness point, max, °F (°C)	ASTM D 2137	-49 (-45)	-67 (-55)
Resistance to Heat Aging * Properties after 4 weeks @ 240°F (116°C) for VersiGard Breaking Strength, min, lbf (N) Elongation, Ultimate, min, % Linear Dimensional Change, max, %	ASTM D 573 ASTM D 751 ASTM D 412 ASTM D 1204	80 (355) 200 ** ±1.0	200 (890) 225 ** -0.7
Ozone Resistance * Condition after exposure to 100 pphm Ozone in air for 168 hours @ 104°F (40°C) Specimen wrapped around 3 inch (7.5 cm) mandrel	ASTM D 1149	No Cracks	No Cracks
Resistance to Water Absorption * After 7 days immersion @ 158°F (70°C) Change in mass, max, %	ASTM D 471	+8.0, -2.0 **	2.0 **
Resistance to Outdoor (Ultraviolet) Weathering * Xenon-Arc, 17,640 (black) or 7560 (white) kJ/m^2 total radiant exposure at 0.70 W/m^2, 176°F (80°C) black panel temperature	ASTM G 155	No Cracks No Crazing	No Cracks No Crazing
Puncture Resistance, Joules 90-mil 105-mil	ASTM D5635		17.5 20
Puncture Resistance, lbf 90-mil 105-mil	FTM 101C Method 2031		280 292
Puncture Resistance, lbf 90-mil 105-mil	ASTM D120		21 22

* Not a Quality Control Test due to the time required for the test or the complexity of the test. However, all tests are run on a statistical basis to ensure overall long-term performance of the sheeting.
** Specimens prepared from coating rubber compound.

2. **Adhesives and Primers**

a) **G200 SA Yellow Substrate Adhesive:** A high-strength, yellow colored, synthetic rubber adhesive used for bonding EPDM membranes to various surfaces. Available in 5 gallon pails.

b) **EPDM x-23 Low-VOC Bonding Adhesive:** A Low-VOC (volatile organic compound) bonding adhesive (less than 250 grams/liter) used for bonding EPDM membranes to various surfaces. Adhesive is available in 5 gallon pails.

c) **CAV-GRIP 3V Low-VOC Adhesive/Primer:** a low-VOC, methylene chloride-free adhesive that can be used for a variety of applications including: bonding VersiGard EPDM and VersiWeld TPO membranes to various surfaces, enhancing the bond between Versico's VapAir Seal 725TR and various substrates, priming unexposed asphalt prior to applying DASH Adhesive and for adhering VersiGard EPDM membrane to vertical walls. Coverage rate is approximately 2,000-2,500 sq. ft. per 40 lb cylinder and 4,000-5,000 sq. ft. per 85 lb cylinder as a primer, in a single-sided application and 750 sq. ft. per 40 lb cylinder and 1,500 sq. ft. per 85 lb cylinder as an adhesive for vertical walls, in a double-sided application; 1,000 sq. ft. per 40 lb

cylinder and 2,000 sq. ft. per 85 lb cylinder as an adhesive, horizontally, for the field of the roof, in a double-sided application.

d) **Solvent-Free EPDM Bonding Adhesive:** A solvent free, odor free, non-flammable, Low-VOC Bonding Adhesive used to adhere EPDM to multiple substrates. This one-sided application adhesive requires adhesive to be applied to substrate only, when slopes are less than 1". Slopes greater than 1" or vertical substrates may require 2-sided application. When the solvent-free adhesive is specified, authorized applicators must review applicable product installation information listed on the appropriate Product Data Sheet.

e) **VersiGard V-150 Primer:** A solvent-based primer used to prepare the surface of EPDM membrane for application of Slice Tape, Pressure-Sensitive. Available in 1 gallon pails.

f) **Low-VOC EPDM and TPO Primer -** A Low-VOC (volatile organic compound) primer (less than 250 grams/liter) for priming of EPDM or TPO surfaces prior to application of QA Seam Tape, Cover strip, SecurTAPE and all other pressure-sensitive products. Available in 1 gallon pails.

g) **VersiGard QA Seam Tape:** A 3" or 6" wide by 100' long splice tape used for splicing adjoining sections of EPDM membrane. Complies with the South Coast Air Quality Management District Rule 1168.

h) **Versico G300LS Lap Sealant:** A black, heavy-bodied material used to seal the exposed edges of a membrane splice. A pre-formed Lap Sealant tool is included in each carton of Lap Sealant. Available in tubes.

i) **Pourable Sealer:** A black, two-component, solvent-free, polyurethane based product used for tie-ins and as a sealant around hard-to-flash membrane penetrating objects such as clusters of pipes and for a daily seal when the completion of flashings and terminations cannot be completed by the end of each work day.

j) **One-Part Pourable Sealer:** Available in black, a one-component, moisture curing, elastomeric polyether sealant used for attaching lightning rod bases and ground cable clips to the membrane surface and as a sealant around hard-to-flash penetrations such as clusters of pipes.

3. **Flashings**

a) **VersiGard Quick Applied "T" Joint Covers:** A factory cut 6" x 6" or 12" x 12" uncured 60-mil thick EPDM flashing (with rounded corners) laminated to a nominal 30-mil QA Seam Tape, used to overlay field splice intersections and to cover field splices at angle changes.

b) **VersiGard Quick Applied Cured Cover Strip:** A 6" and 9" width by 100' long and 12" by 50' long VersiGard 60-mil EPDM membrane laminated to a nominal 30-mil cured QA Seam Tape. The Cured Cover Strip is ideal for flashing gravel stops, metal edging, Versico Seam Fastening Plates and for EPDM repairs.

c) **VersiGard Quick Applied Overlayment Strip:** A nominal 40-mil black, semi-cured EPDM membrane laminated to a nominal 30-mil cured, QA Seam Tape. Available in 6" and 9" widths and 100' long rolls used to overlay seams, flash gravel stops, metal edgings and Seam Fastening Plates used for additional membrane securement.

d) **VersiGard Quick Applied Uncured EPDM Flashing:** A 6" by 100' and 9" or 12" wide by 50' long, 60-mil thick VersiGard uncured EPDM Flashing laminated to a 30-mil QA Seam Tape used in conjunction with EPDM Primer.

e) **VersiGard Quick Applied Walkway Pads:** VersiGard (black) molded walkway pads with QA Seam Tape used to provide protection for areas of EPDM membrane that are exposed to regular rooftop maintenance.

f) **Additional Accessories:** A complete line-up of VersiGard EPDM accessories including corners, curb wraps pipe seals and sealant pockets. For product information, refer to **Spec Supplement P-01-18 "Other Related Products".**

4. **EPDM Fasteners and Seam Plates**

a) **Polymer Seam Plate:** A 2" diameter plastic barbed fastening plate used with Versico HPV Fastener for EPDM membrane securement.

b) **HPV Fastener:** A threaded E-Coat square drive fastener. Used in conjunction with 2" diameter Seam fastening plates for base securement at angle change.

F. **EPDM AC Membrane Splicing with QA Seam Tape**

1. **General**

a) EPDM AC membrane has a selvage edge (fleece backing is discontinued) along the length of the sheet for membrane splicing.

b) If a membrane becomes contaminated with field dirt, etc., remove dirt or excess dust from mating surfaces of overlapping sheets by wiping with Splice Wipes or clean natural fiber rags. Accumulated dirt, footprints, etc. must be removed by scrubbing membrane with Weathered Membrane Cleaner or Versico's EPDM Primer.

2. **Projects with 10, 15 and 20 year Warranties - Detail AC-MA1**

Side Laps: The tape splices may be a minimum of 5-1/2" wide using 6" wide field-applied Quick-Applied QA Seam Tape OR 6" Factory-Applied QA Seam Tape (VersiGard QAT). (**Detail AC-MA1**).

End Laps: A minimum of 6" wide Quick Applied cured Coverstrip or Quick Applied Overlayment Strip shall be used at all end laps and shall be centered over the leading edge (butt edge) of the splice. (**Detail AC-MA1**).

Splice Intersections: All intersections between the Quick Applied Coverstrip and side laps shall be overlaid by a 6"x6" minimum EPDM Quick-Applied 'T'-Joint cover with a bead of Lap Sealant. (**Detail AC-MA1**).

Note: A minimum 6"x6" section of Quick-Applied Uncured Flashing may be used as a 'T'-Joint cover. Quick-Applied Uncured Flashing is available in rolls of 6", 9" and 12".

3. **Flashing Considerations**

a) For the VersiGard AC Membrane, all vertical field splices must be overlaid at the base of a wall or curb. Use a 6" x 6" section (with rounded corners) of VersiGard Quick Applied Overlayment Strip centered over the field splice.
b) VersiGard Quick Applied Uncured Flashing must be limited to overlayment of vertical seams (as required at angle changes), or to flash inside/outside corners, vent pipes, scuppers and other unusually shaped penetrations where the use of pre-molded pipe seals, membrane, Quick Applied Overlayment Strip (semi-cured), or Cured Cover Strip is not practical.

G. **Associated Installation Details**

AC EPDM Mechanically Attached Membrane and End Lap Splices……. AC-MA1
AC TPO Mechanically Attached Membrane and End Laps……...……. AC-MA2

End of Section

MEMBRANE SPLICE

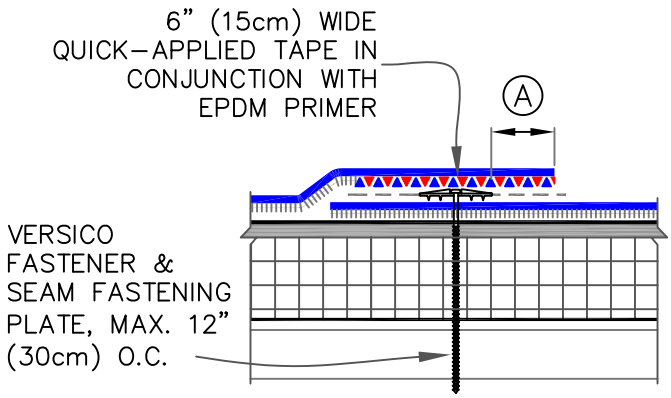

DIMENSION	cm	
A 2"	5	

END LAP SPLICE

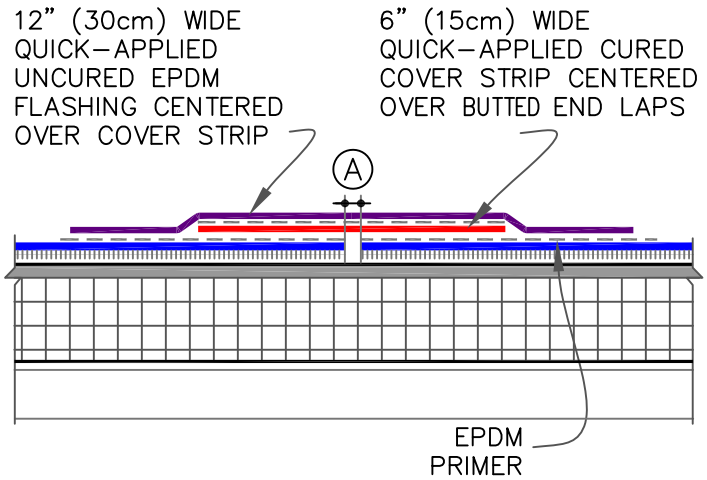

DIMENSION	cm		
A 1"	2.5	MAX.	

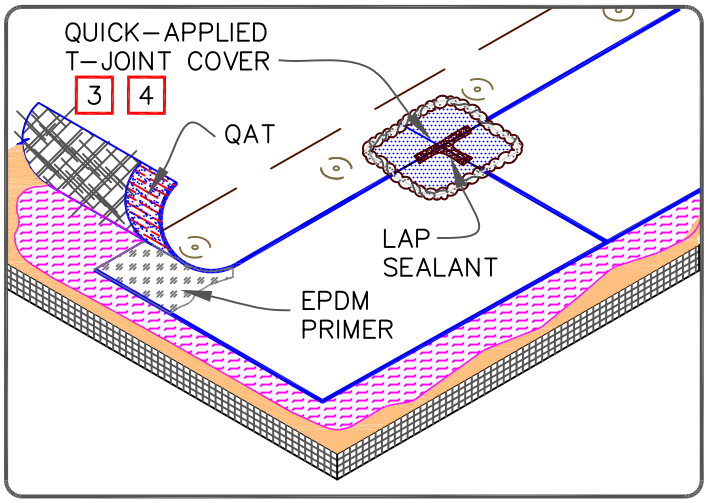

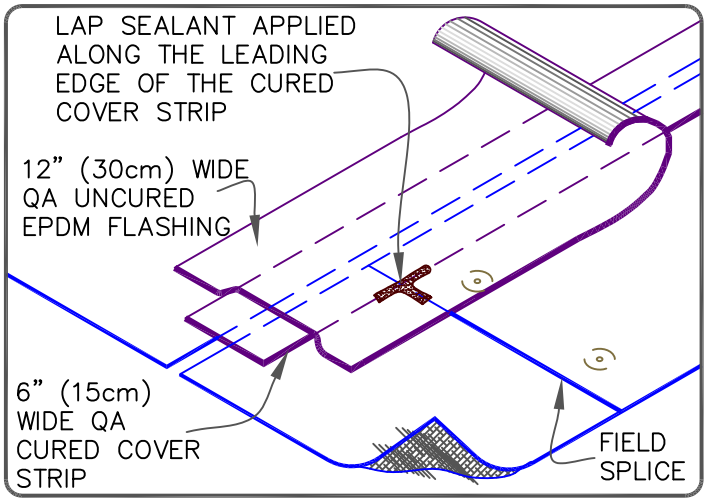

NOTES:

1. REFER TO VERSICO SPECIFICATIONS FOR REQUIRED FASTENERS AND FASTENING DENSITY.
2. APPLY EPDM PRIMER TO MEMBRANE SURFACES PRIOR TO INSTALLING QUICK–APPLIED FLASHING AND/OR QUICK–APPLIED EPDM WITH FACTORY APPLIED TAPE.
3. APPLY LAP SEALANT ALONG THE EDGE OF THE MEMBRANE SPLICE (UNDER THE 6"x6" (15cmx15cm) T–JOINT COVER) COVERING THE EXPOSED SPLICE TAPE 1/2" (1.5cm) IN EACH DIRECTION FROM THE SPLICE INTERSECTION.
4. 6" (15cm) WIDE QUICK–APPLIED UNCURED EPDM FLASHING MAY ALSO BE CENTERED OVER THE FIELD SPLICE INTERSECTION.

VERSICO ROOFING SYSTEMS
© 2024 VERSICO

AC EPDM MECHANICALLY ATTACHED MEMBRANE & END LAP SPLICES

→ EPDM AC MEMBRANE
→ APPROVED SUBSTRATE
0 → SEE NOTE(S)

VERSIFLEECE AC EPDM

AC–MA1

MEMBRANE SPLICE

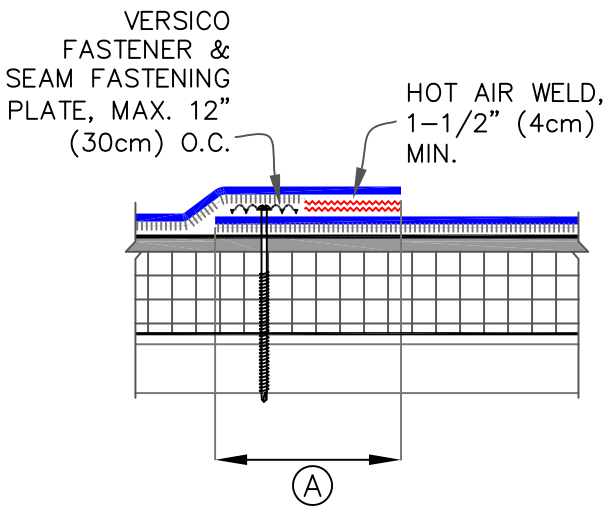

DIMENSIONS		cm	
A	5–1/2"	14	

END LAP SPLICE

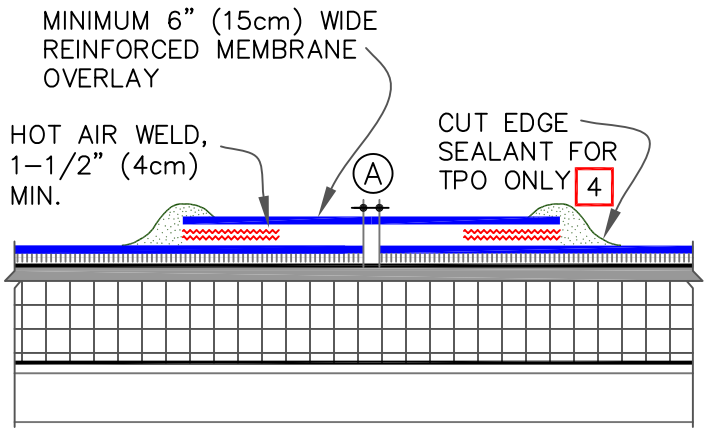

DIMENSION		cm	
A	1"	25	MAX.

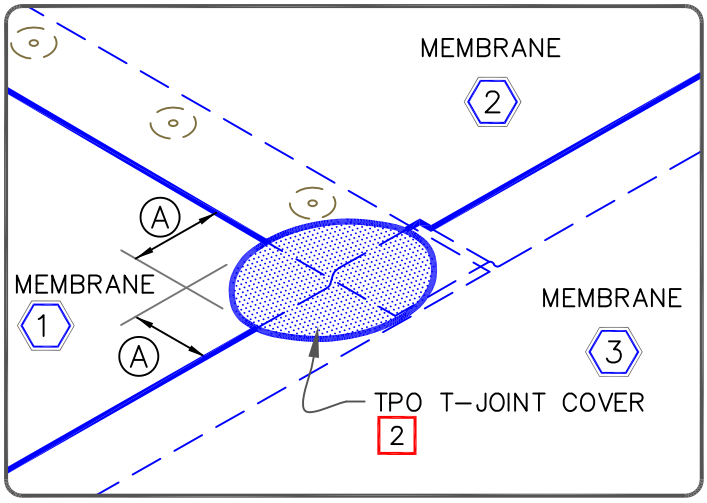

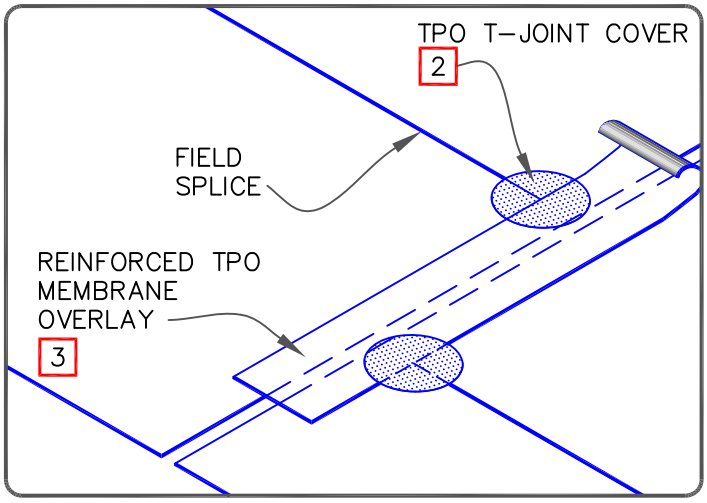

NOTES:

1. REFER TO VERSICO SPECIFICATIONS FOR REQUIRED FASTENERS AND FASTENING DENSITY.
2. WHEN USING 135 OR 155–MIL AC TPO MEMBRANE, APPLY A 4–1/2" (11cm) DIAMETER TPO "T–JOINT" COVER AT ALL FIELD SPLICE INTERSECTIONS.
3. WHEN USING 60 OR 80 MIL REINFORCED TPO MEMBRANE OVERLAY, INTERSECTIONS BETWEEN SPLICES MUST BE OVERLAID WITH A 4–1/2" (11cm) DIAMETER TPO "T–JOINT" COVER, AS SHOWN.
4. APPROXIMATELY 1/8" (0.5cm) DIAMETER BEAD OF CUT–EDGE SEALANT IS REQUIRED ON CUT EDGES OF REINFORCED TPO MEMBRANE.

VERSICO ROOFING SYSTEMS
© 2024 VERSICO

AC TPO MECHANICALLY ATTACHED MEMBRANE & END LAPS

→ AC MEMBRANE OR KEE HP
→ ASPHALT/COLD APPLIED
→ APPROVED SUBSTRATE
0 → SEE NOTE(S)

VERSIFLEECE AC OR KEE HP

AC–MA2

VersiFleece AC TPO
Hot Mopped / Cold Applied Adhered Roofing System

Installation Details

January 2024

Mechanically Attached Membrane and End Lap — **Detail**

AC EPDM Mechanically Attached Membrane and End Lap Splices AC-MA1
AC TPO Mechanically Attached Membrane and End Laps AC-MA2

Metal Edges and Gravel Stops

VersiTrim Drip Edge Fascia AC-1.1
VersiTrim Heat Weldable Drip Edge AC-1.2
Metal Bar Edge Termination AC-1.3
VersiTrim 200 ..... AC-1.4
VersiTrim 300 ..... AC-1.5
VersiTrim 2000 & 3000 ..... AC-1.6

Membrane Splices

AC TPO Membrane Splices AC-2.2

Expansion Joints

Deck-to-Deck Expansion Joint AC-3.1
Deck-to-Wall Expansion Detail AC-3.2

Drains

Roof Drain with Continuous Membrane AC-6.1
Roof Drain with Separate Target Splice AC-6.2

Pipe Flashing

Pre-molded Pipe Seal AC-8.1
Field Fabricated Pipe Flashing AC-8.2

Termination

Membrane Termination (Page 1 of 2) AC-9.0
Membrane Termination (Page 2 of 2) AC-9.0

Parapet / Curb Flashing

Parapet/Curb with Separate Membrane Flashing AC-12.1
Parapet/Curb with Continuous Membrane Flashing AC-12.2

Inside / Outside Corners

TPO Pre-molded Inside Corners AC-15.3
TPO Pre-Molded Outside Corners AC-15.4

Sealant Pocket

TPO Molded Sealant Pocket AC-16.2

Through-Wall Scupper

Through-Wall Scupper with TPO Coated Metal AC-18.2

MEMBRANE SPLICE

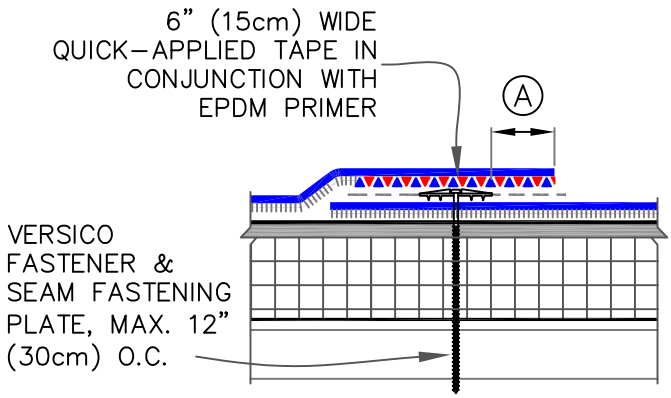

DIMENSION	cm	
A 2"	5	

END LAP SPLICE

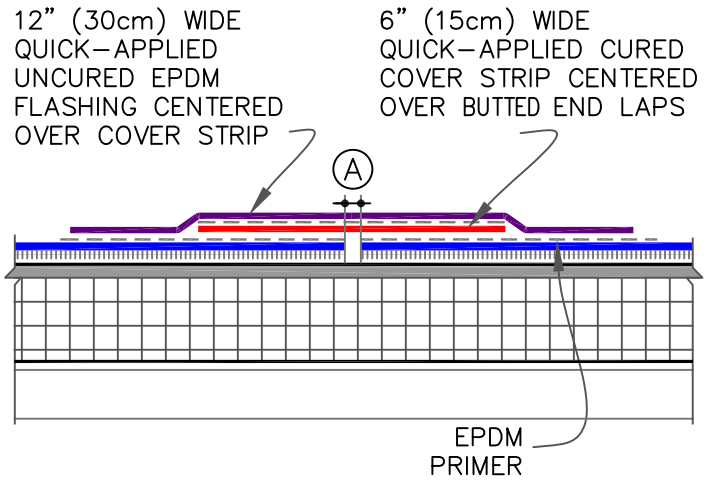

DIMENSION	cm		
A 1"	2.5	MAX.	

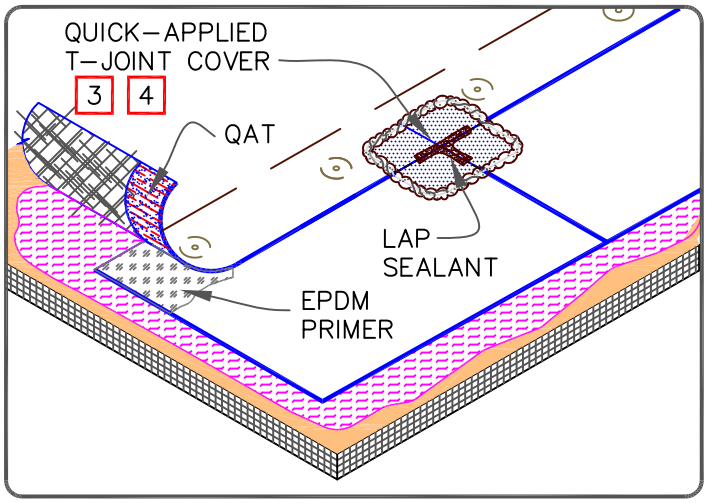

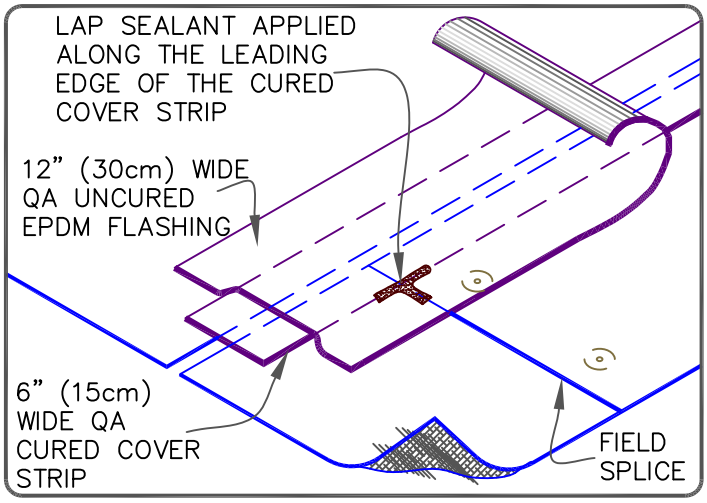

NOTES:

1. REFER TO VERSICO SPECIFICATIONS FOR REQUIRED FASTENERS AND FASTENING DENSITY.
2. APPLY EPDM PRIMER TO MEMBRANE SURFACES PRIOR TO INSTALLING QUICK–APPLIED FLASHING AND/OR QUICK–APPLIED EPDM WITH FACTORY APPLIED TAPE.
3. APPLY LAP SEALANT ALONG THE EDGE OF THE MEMBRANE SPLICE (UNDER THE 6"x6" (15cmx15cm) T–JOINT COVER) COVERING THE EXPOSED SPLICE TAPE 1/2" (1.5cm) IN EACH DIRECTION FROM THE SPLICE INTERSECTION.
4. 6" (15cm) WIDE QUICK–APPLIED UNCURED EPDM FLASHING MAY ALSO BE CENTERED OVER THE FIELD SPLICE INTERSECTION.

VERSICO ROOFING SYSTEMS
© 2024 VERSICO

AC EPDM MECHANICALLY ATTACHED MEMBRANE & END LAP SPLICES

→ EPDM AC MEMBRANE
→ APPROVED SUBSTRATE
0 → SEE NOTE(S)

VERSIFLEECE AC EPDM

AC–MA1

MEMBRANE SPLICE

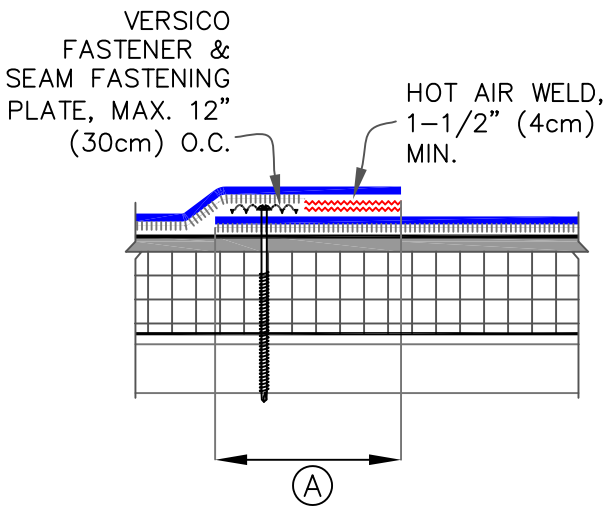

DIMENSIONS		cm	
A	5–1/2"	14	

END LAP SPLICE

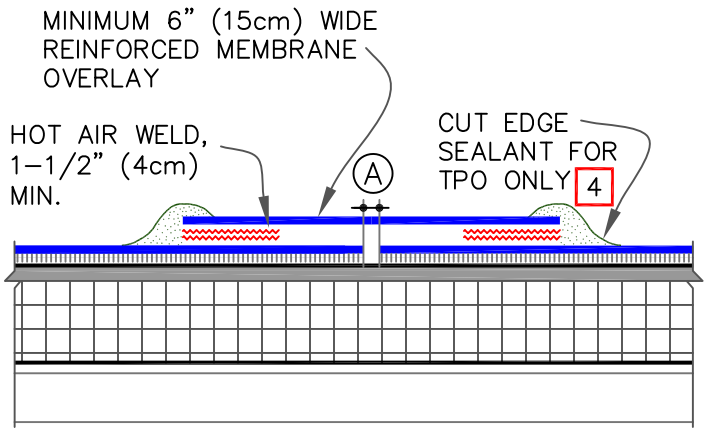

DIMENSION		cm	
A	1"	25	MAX.

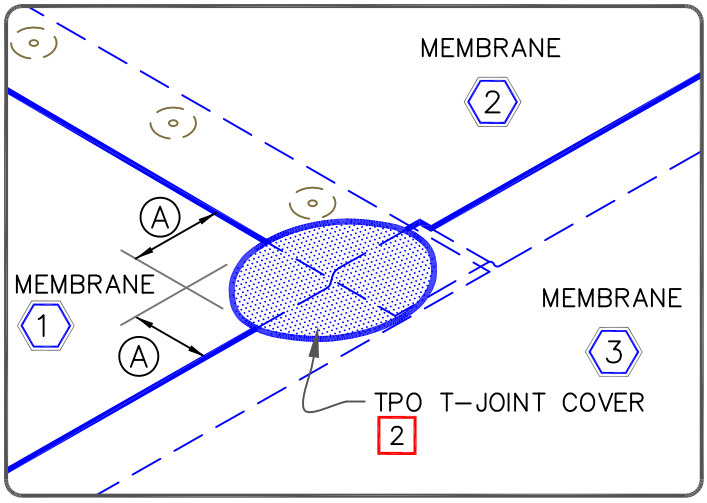

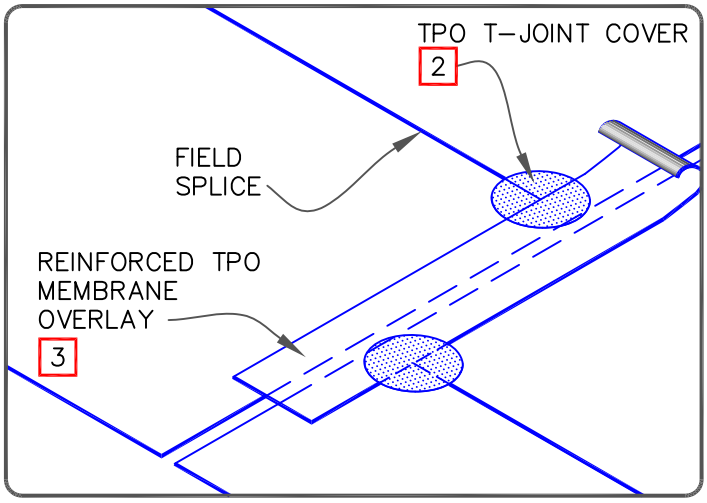

NOTES:

1. REFER TO VERSICO SPECIFICATIONS FOR REQUIRED FASTENERS AND FASTENING DENSITY.
2. WHEN USING 135 OR 155–MIL AC TPO MEMBRANE, APPLY A 4–1/2" (11cm) DIAMETER TPO "T–JOINT" COVER AT ALL FIELD SPLICE INTERSECTIONS.
3. WHEN USING 60 OR 80 MIL REINFORCED TPO MEMBRANE OVERLAY, INTERSECTIONS BETWEEN SPLICES MUST BE OVERLAID WITH A 4–1/2" (11cm) DIAMETER TPO "T–JOINT" COVER, AS SHOWN.
4. APPROXIMATELY 1/8" (0.5cm) DIAMETER BEAD OF CUT–EDGE SEALANT IS REQUIRED ON CUT EDGES OF REINFORCED TPO MEMBRANE.

VERSICO ROOFING SYSTEMS
© 2024 VERSICO

AC TPO MECHANICALLY ATTACHED MEMBRANE & END LAPS

→ AC MEMBRANE OR KEE HP
→ ASPHALT/COLD APPLIED
→ APPROVED SUBSTRATE
0 → SEE NOTE(S)

VERSIFLEECE AC OR KEE HP

AC–MA2

CAUTION

DETAIL NOT FOR USE ON 25-YEAR WARRANTY PROJECTS. ACCEPTABLE EDGING SHALL CONFORM WITH VERSIFLEECE AC-1.2, 1.3, 1.4, 1.5 OR 1.6.

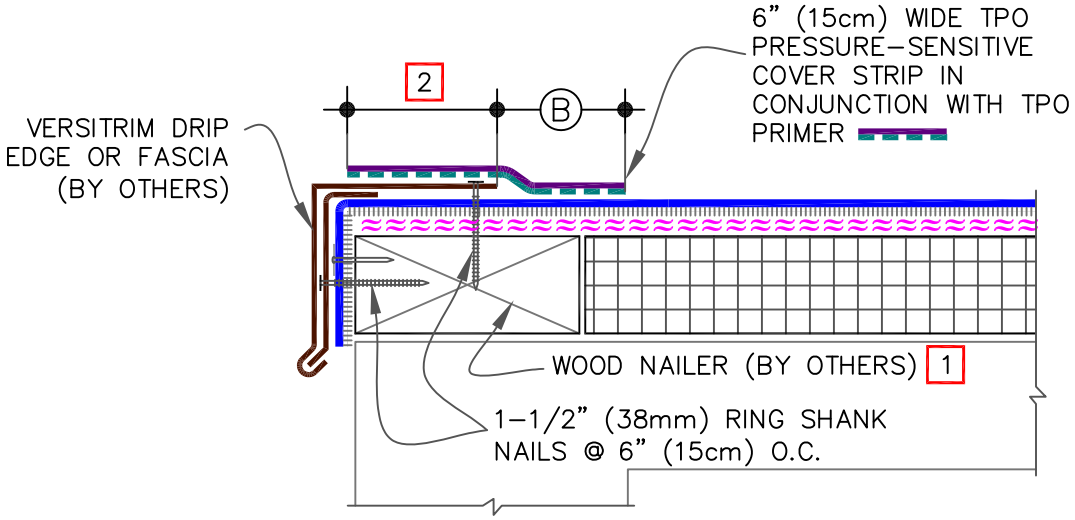

DIMENSIONS		cm	
A	1/2"	1.5	TO
	1"	2.5	
B	2"	5	MIN.

NOTES:

1. WOOD NAILER MUST EXTEND PAST TOTAL WIDTH OF METAL FASCIA DECK FLANGE.
2. METAL FASCIA DECK FLANGE MUST BE TOTALLY COVERED BY TPO PRESSURE-SENSITIVE COVER STRIP WITH MINIMUM 2" (5cm) COVERAGE PAST NAIL HEADS.
3. TO REMOVE FINISHING OILS, SCRUB METAL FLANGE WITH WEATHERED MEMBRANE CLEANER; ALLOW TO DRY PRIOR TO APPLYING PRIMER.
4. APPLY TPO PRIMER TO METAL FLANGE AND MEMBRANE SURFACE PRIOR TO INSTALLING PRESSURE-SENSITIVE FLASHING.
5. WHEN METAL FASCIA BY OTHERS IS USED, FASTENER TYPE AND FASTENING FREQUENCY SHALL BE RECOMMENDED BY METAL EDGE MANUFACTURER.

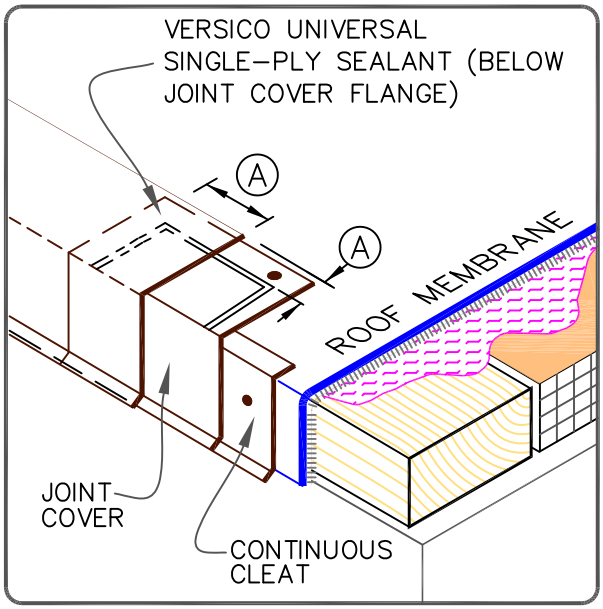

VERSICO ROOFING SYSTEMS

© 2024 VERSICO

VERSITRIM DRIP EDGE FASCIA

AC MEMBRANE OR KEE HP
ASPHALT/COLD APPLIED
APPROVED SUBSTRATE
0 SEE NOTE(S)

VERSIFLEECE AC OR KEE HP

AC-1.1

THERMOPLASTIC MEMBRANE — VersiFleece AC

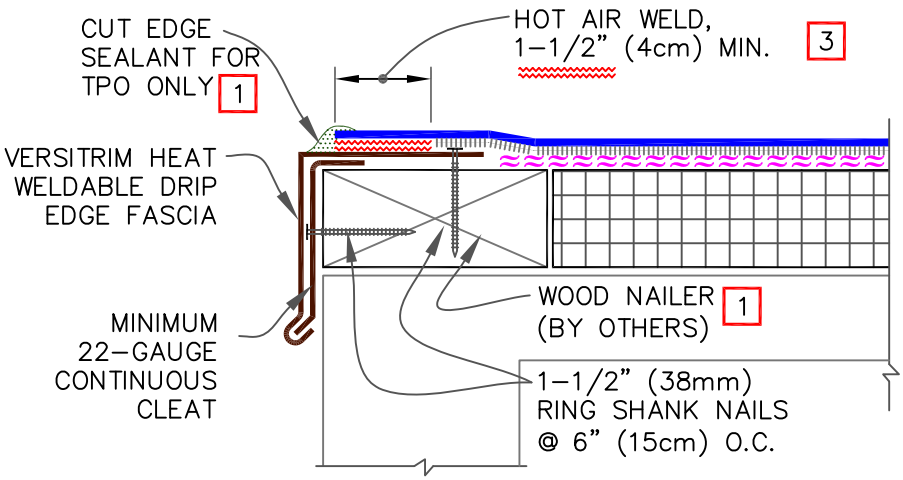

NOTES:

1. APPROXIMATELY 1/8" (0.5cm) DIAMETER BEAD OF CUT–EDGE SEALANT IS REQUIRED ON CUT EDGES OF REINFORCED TPO MEMBRANE.
2. WOOD NAILER MUST EXTEND PAST TOTAL WIDTH OF METAL FASCIA DECK FLANGE.
3. POSITION MEMBRANE WITH SELVAGE EDGE TO AVOID REMOVAL OF FLEECE BACKING.

1

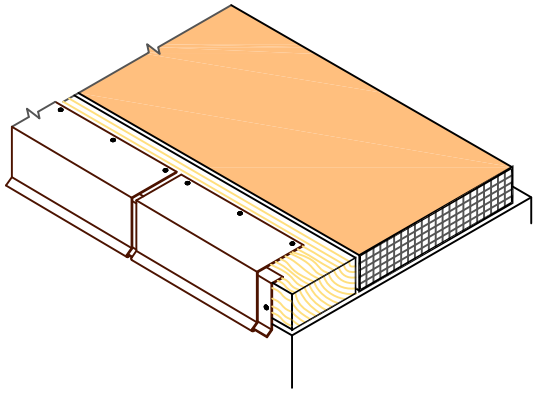

INSTALL CONTINUOUS CLEAT AND COATED METAL WITH 1/8"–1/4" (0.5–1cm) JOINTS BETWEEN ADJOINING SECTIONS.

2

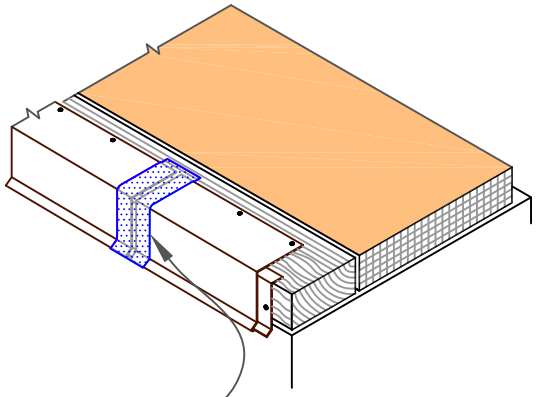

HEAT WELD 3" (7.5cm) WIDE PIECE OF NON–REINFORCED THERMOPLASTIC MEMBRANE OVER JOINT

3

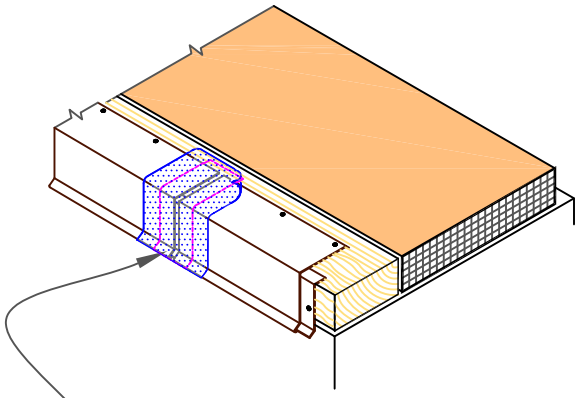

HEAT WELD 6" (15cm) WIDE PIECE OF NON–REINFORCED MEMBRANE OVER JOINT

4

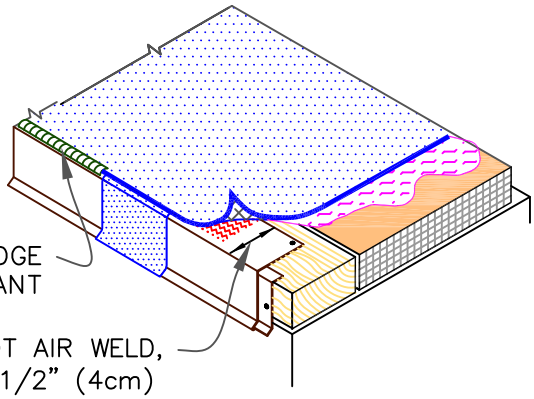

POSITION FIELD MEMBRANE AND HEAT WELD COATED METAL A MINIMUM OF 1–1/2" (4cm) AS SHOWN.

VERSICO ROOFING SYSTEMS

© 2024 VERSICO

VERSITRIM HEAT WELDABLE DRIP EDGE

AC MEMBRANE OR KEE HP
ASPHALT/COLD APPLIED
APPROVED SUBSTRATE
0 → SEE NOTE(S)

VERSIFLEECE AC OR KEE HP

AC–1.2

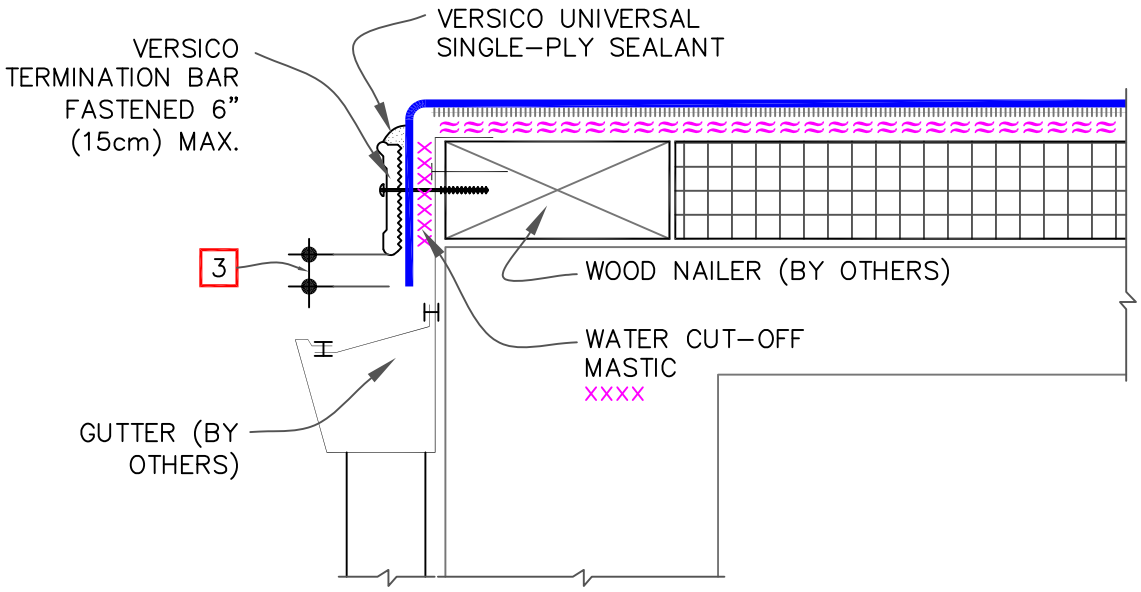

NOTES:

1. POSITION MEMBRANE WITH SELVAGE EDGE AT TERMINATION BAR LOCATION TO AVOID REMOVAL OF FLEECE BACKING.
2. FASTENING OF METAL TERMINATION BAR MUST PROVIDE CONSTANT COMPRESSION ON WATER CUT–OFF MASTIC.
3. ALLOW MEMBRANE SHEET TO EXTEND 1/2" (1.5cm) MINIMUM BELOW THE METAL TERMINATION BAR.

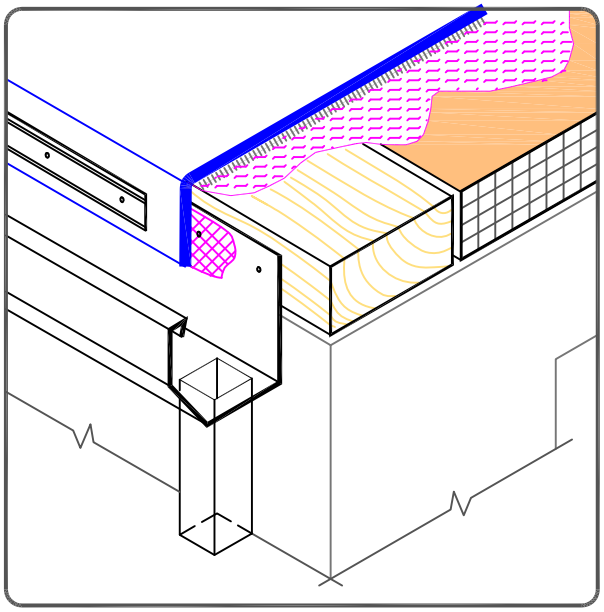

VERSICO ROOFING SYSTEMS
© 2024 VERSICO

METAL BAR EDGE TERMINATION

AC MEMBRANE OR KEE HP
ASPHALT/COLD APPLIED
APPROVED SUBSTRATE
0 SEE NOTE(S)

VERSIFLEECE AC OR KEE HP

AC–1.3

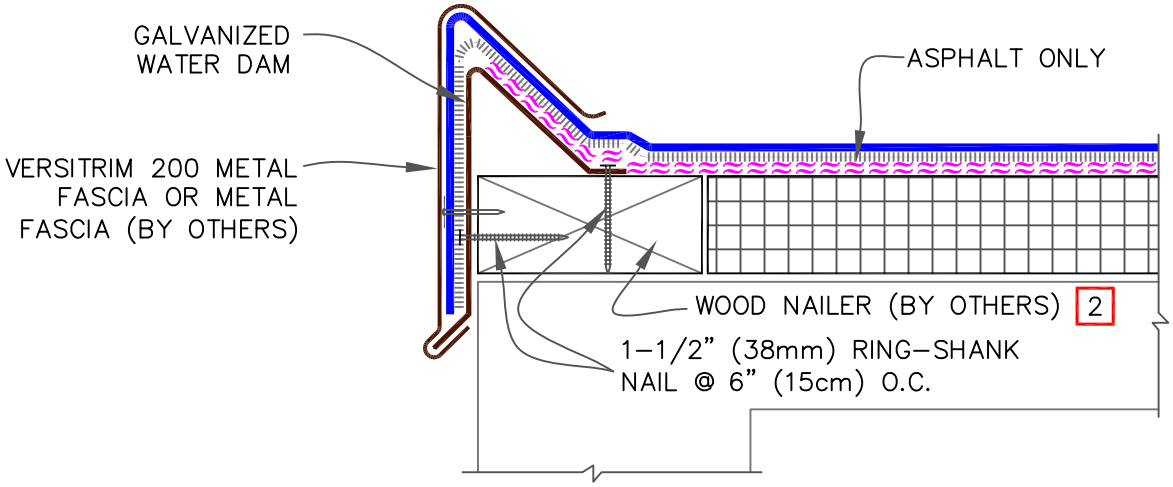

NOTES:

1. REFER TO VERSITRIM 200 INSTALLATION INSTRUCTION MANUAL FOR STEP–BY–STEP INSTALLATION PROCEDURES.
2. WOOD NAILER MUST EXTEND PAST TOTAL WIDTH OF GRAVEL STOP DECK FLANGE.
3. WHEN METAL FASCIA BY OTHERS IS USED, FASTENER TYPE AND FASTENING FREQUENCY SHALL BE RECOMMENDED BY METAL EDGE MANUFACTURER.

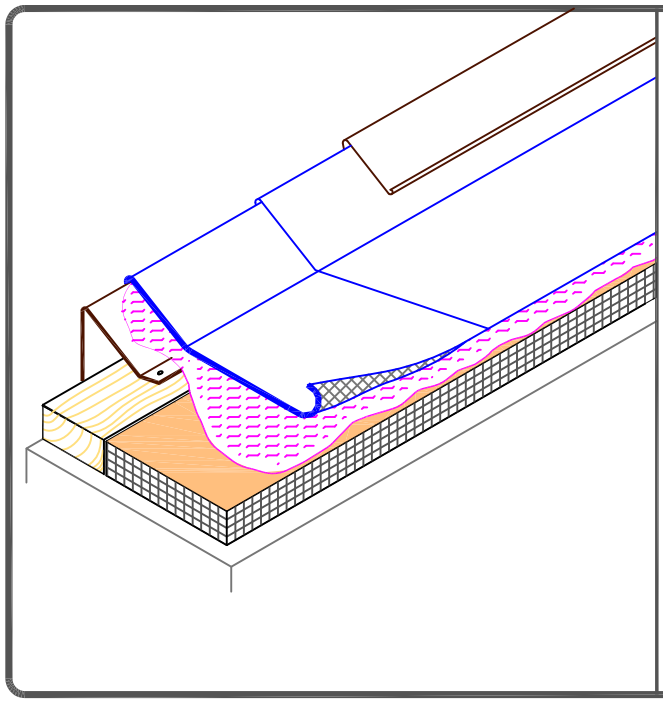

AT CORNERS, SEAM FASTENING PLATES MUST BE INSTALLED 12" (30cm) MAX. FROM THE BASE OF THE WATER–DAM AND SHALL EXTEND 36" (91cm) MINIMUM IN EACH DIRECTION. STRIP IN WITH REINFORCED TPO FLASHING AND HEAT WELD ON ALL SIDES.

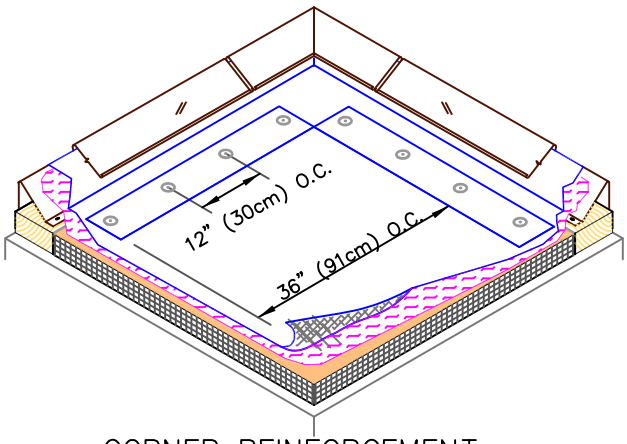

CORNER REINFORCEMENT

VERSICO ROOFING SYSTEMS
© 2024 VERSICO

VERSITRIM 200

AC MEMBRANE OR KEE HP
ASPHALT/COLD APPLIED
APPROVED SUBSTRATE
0 SEE NOTE(S)

VERSIFLEECE AC OR KEE HP

AC–1.4

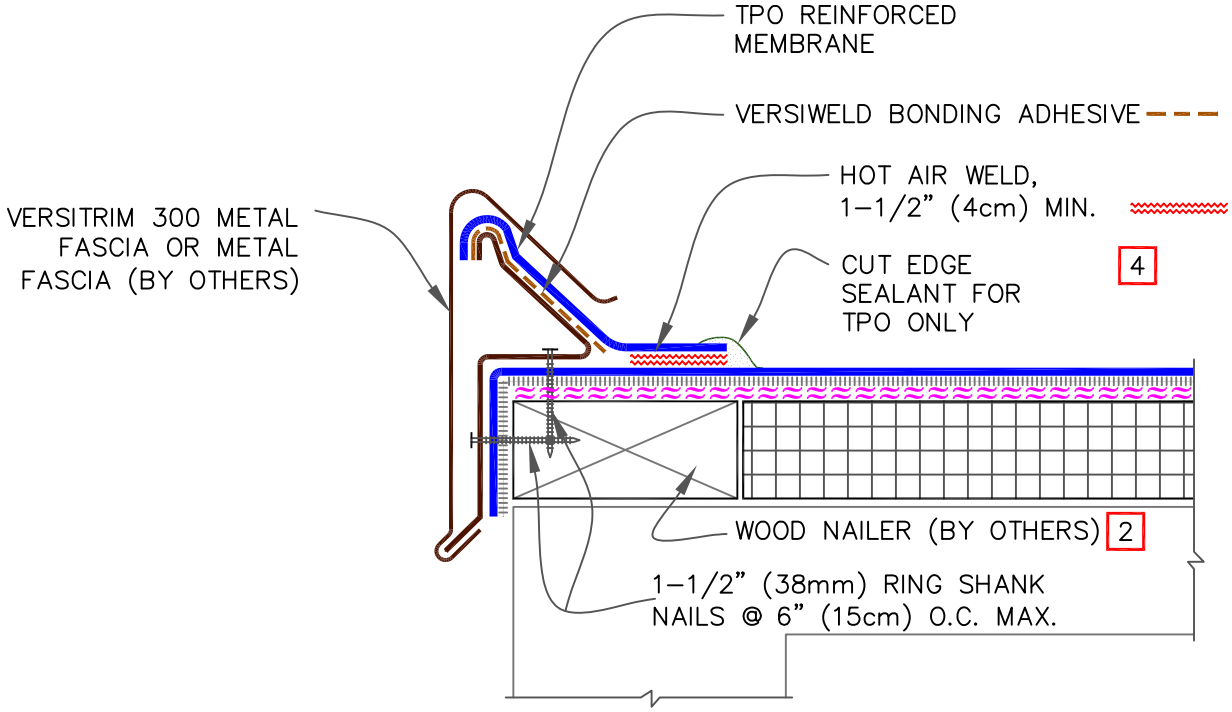

NOTES:

1. REFER TO VERSITRIM 300 INSTALLATION INSTRUCTION MANUAL FOR STEP–BY–STEP INSTALLATION PROCEDURES.
2. WOOD NAILER MUST EXTEND PAST TOTAL WIDTH OF GRAVEL STOP DECK FLANGE.
3. WHEN METAL FASCIA BY OTHERS IS USED, FASTENER TYPE AND FASTENING FREQUENCY SHALL BE RECOMMENDED BY METAL EDGE MANUFACTURER.
4. APPROXIMATELY 1/8" (0.5cm) DIAMETER BEAD OF CUT EDGE SEALANT IS REQUIRED ON CUT EDGES OF REINFORCED TPO MEMBRANE.

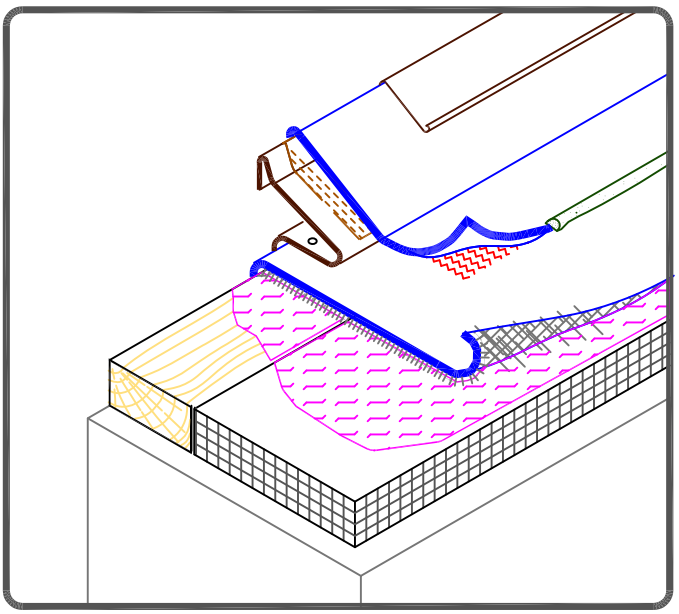

VERSICO ROOFING SYSTEMS
© 2024 VERSICO

VERSITRIM 300

AC MEMBRANE OR KEE HP
ASPHALT/COLD APPLIED
APPROVED SUBSTRATE
0 → SEE NOTE(S)

VERSIFLEECE AC OR KEE HP

AC–1.5

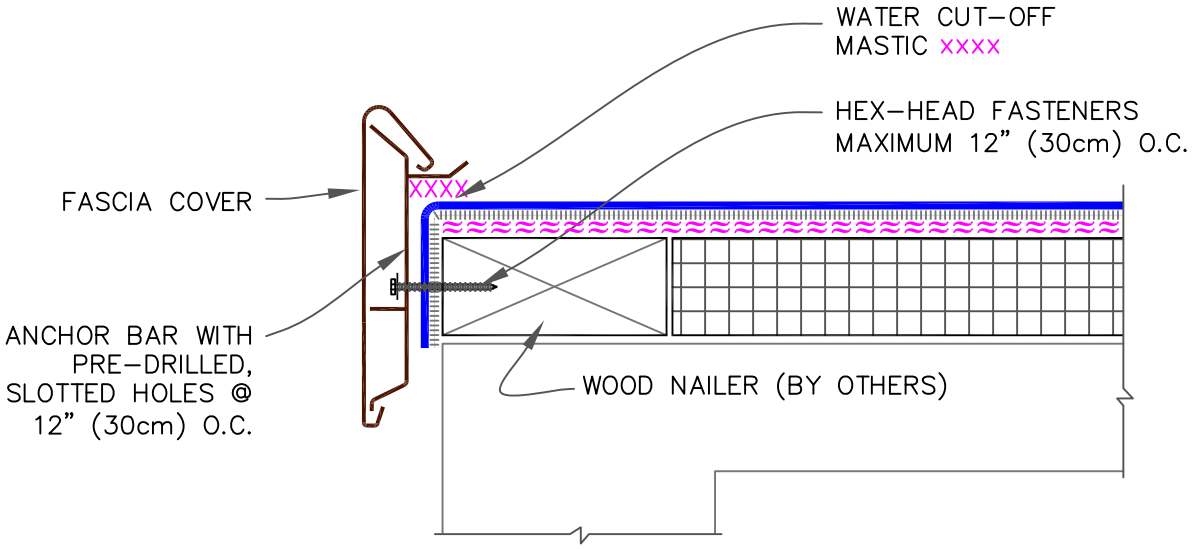

VERSITRIM 2000

NOTES:

1. REFER TO VERSITRIM 2000 OR 3000 INSTRUCTION MANUALS FOR STEP BY STEP INSTALLATION PROCEDURES.
2. IF INCIDENTAL/TEMPORARY PONDED WATER IS EXPECTED, THE VERSITRIM MUST BE ELEVATED AND SCUPPERS PROVIDED FOR DRAINAGE.
3. ENSURE ROOF SLOPES AWAY FROM VERSITRIM.

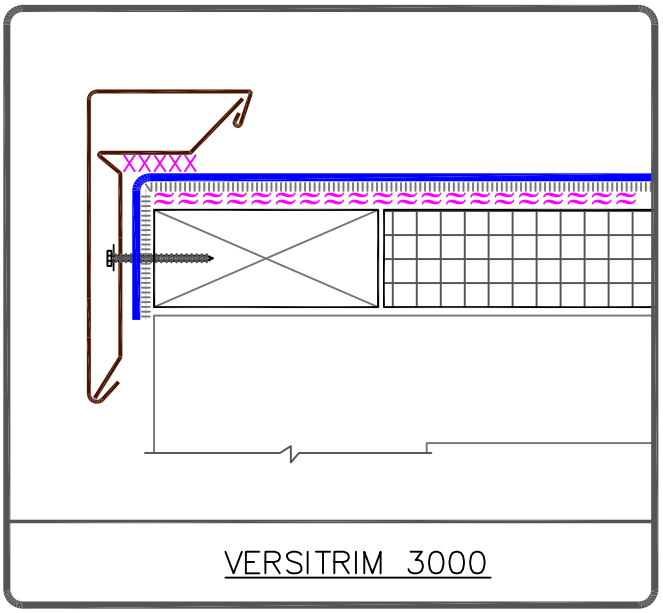

VERSITRIM 3000

VERSICO ROOFING SYSTEMS
© 2024 VERSICO

VERSITRIM 2000 & 3000

AC MEMBRANE OR KEE HP
ASPHALT/COLD APPLIED
APPROVED SUBSTRATE
0 → SEE NOTE(S)

VERSIFLEECE AC OR KEE HP

AC-1.6

MEMBRANE SPLICE

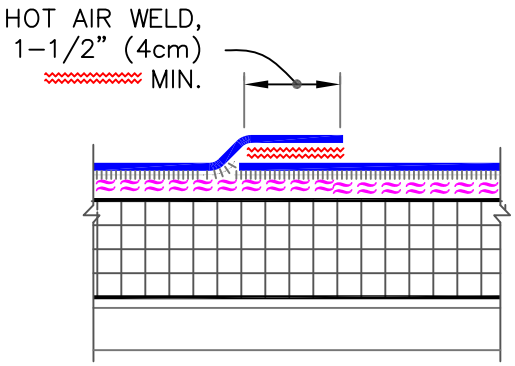

DIMENSION		cm	
A	2–1/4"	6	

END LAP SPLICE

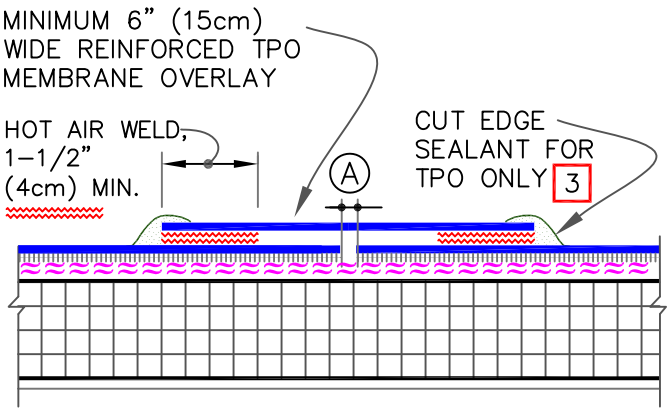

DIMENSION		cm	
A	1"	2.5	MAX.

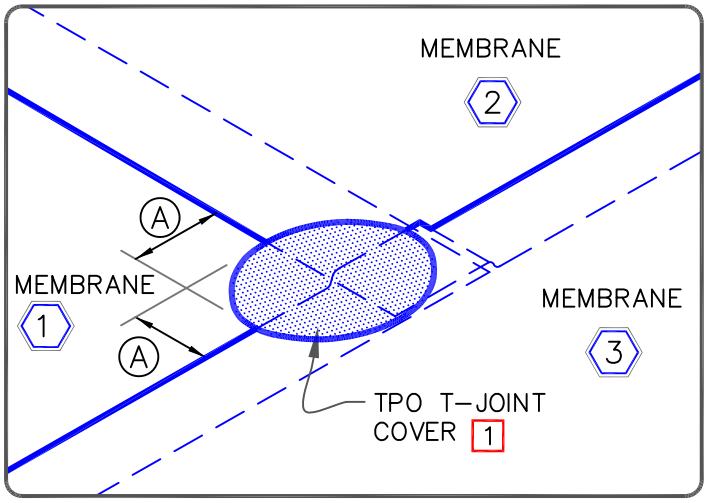

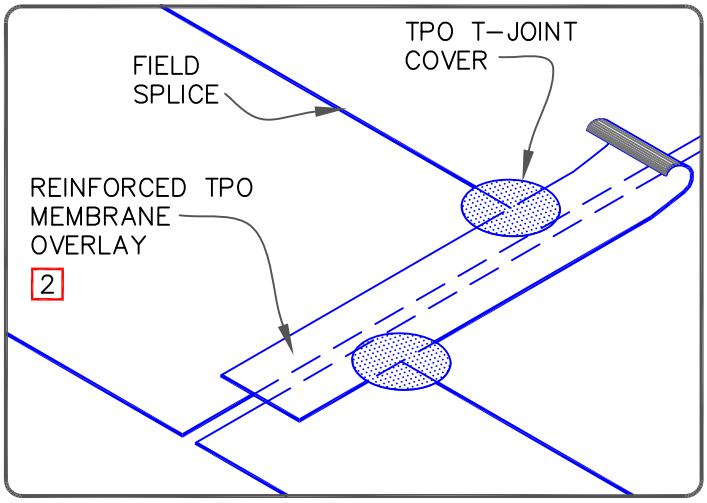

NOTES:

1. WHEN USING 135 OR 155–MIL TPO AC MEMBRANE, APPLY A 4–1/2" (11cm) DIAMETER TPO "T–JOINT" COVER AT ALL FIELD SPLICE INTERSECTIONS.
2. WHEN USING 60 OR 80 MIL TPO REINFORCED MEMBRANE OVERLAY, INTERSECTIONS BETWEEN SPLICES MUST BE OVERLAID WITH A 4–1/2" (11cm) DIAMETER TPO "T–JOINT" COVER.
3. APPROXIMATELY 1/8" (0.5cm) DIAMETER BEAD OF CUT–EDGE SEALANT IS REQUIRED ON CUT EDGES OF TPO REINFORCED MEMBRANE.

© 2024 VERSICO

AC TPO MEMBRANE SPLICES

AC MEMBRANE OR KEE HP
ASPHALT/COLD APPLIED
APPROVED SUBSTRATE
0 → SEE NOTE(S)

VERSIFLEECE AC OR KEE HP

AC–2.2

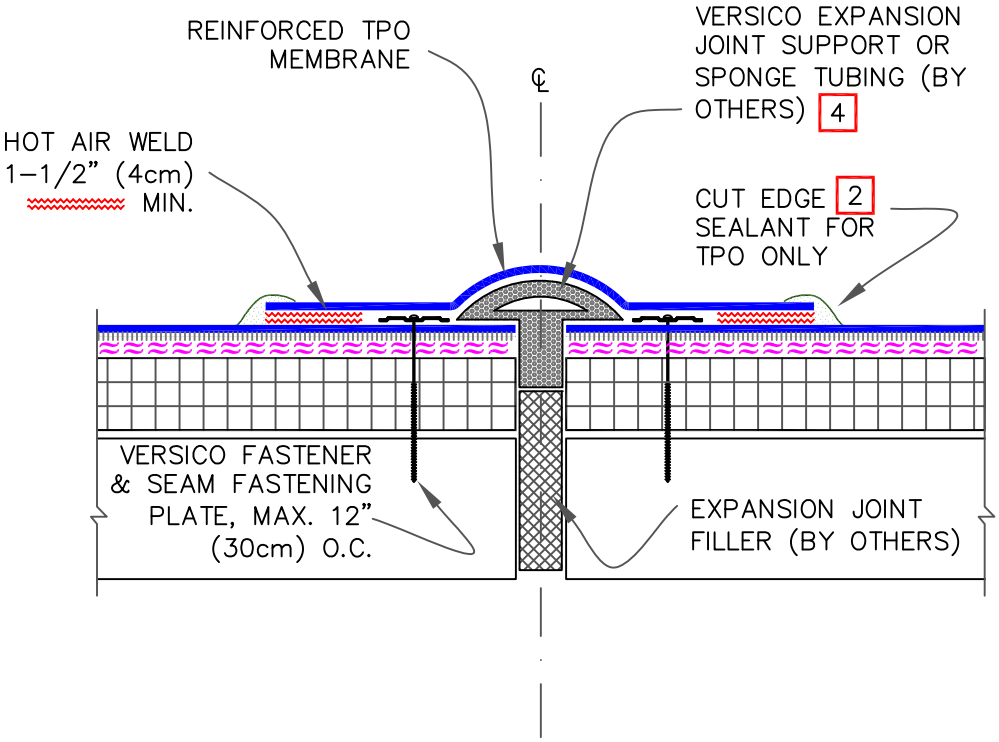

NOTES:

1. WHEN VERSICO EXPANSION JOINT SUPPORT IS USED, WIDTH OF JOINT SHALL BE A MINIMUM OF 3/4" (2cm) AND SHALL NOT EXCEED 3" (7.5cm).

2. APPROXIMATELY 1/8" (0.5cm) DIAMETER BEAD OF CUT–EDGE SEALANT IS REQUIRED ON CUT EDGES OF REINFORCED TPO MEMBRANE.

3. WHEN USING 60 OR 80–MIL REINFORCED TPO MEMBRANE, APPLY A 4–1/2" (11cm) DIAMETER TPO "T–JOINT" COVER AT ALL FIELD SPLICE INTERSECTIONS.

4. ROOF MEMBRANE SHALL NOT BE ADHERED OVER THE EXPANSION JOINT SUPPORT OR SPONGE TUBING.

VERSICO ROOFING SYSTEMS
© 2024 VERSICO

DECK–TO–DECK EXPANSION JOINT

→ AC MEMBRANE OR KEE HP
→ ASPHALT/COLD APPLIED
→ APPROVED SUBSTRATE
0 → SEE NOTE(S)

VERSIFLEECE AC OR KEE HP

AC – 3.1

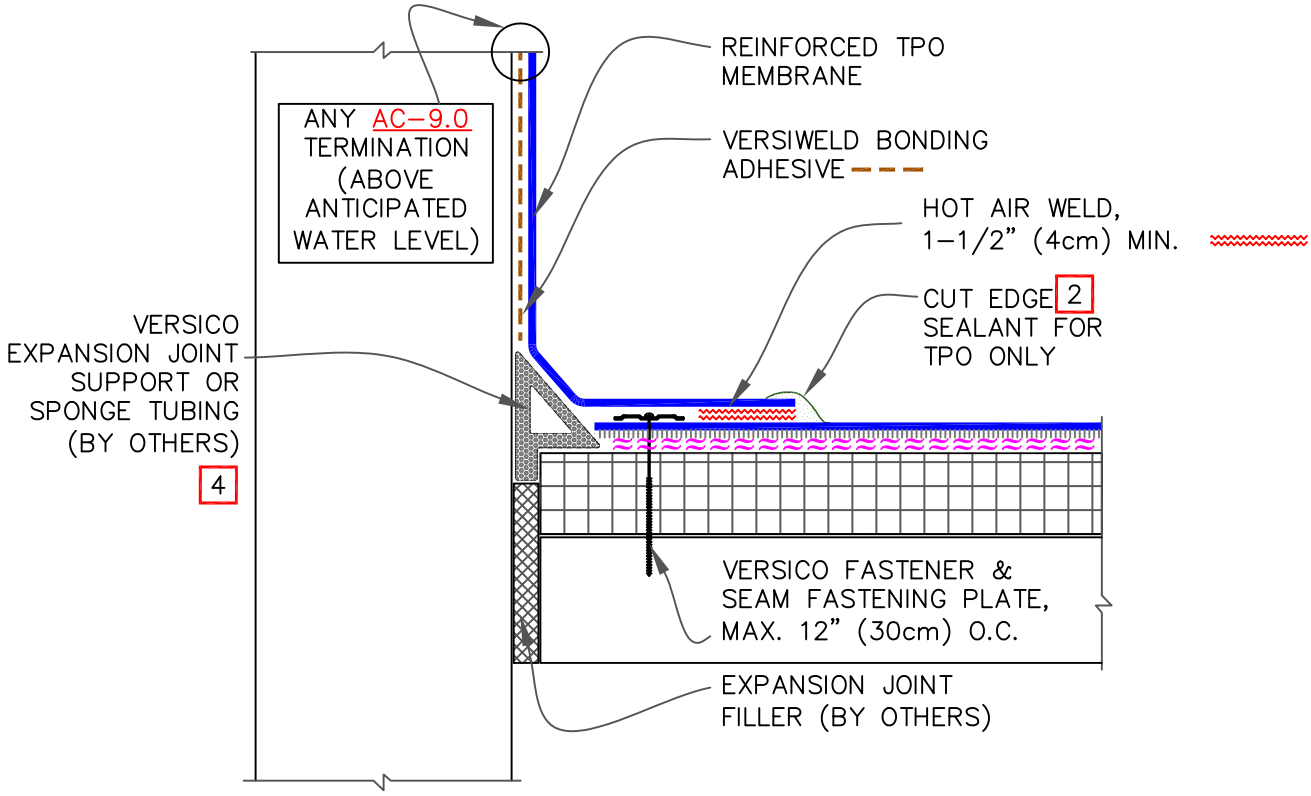

NOTES:

1. WHEN VERSICO EXPANSION JOINT SUPPORT IS USED, WIDTH OF JOINT SHALL BE A MINIMUM OF 3/4" (2cm) AND SHALL NOT EXCEED 2" (5cm).

2. APPROXIMATELY 1/8" (0.5cm) DIAMETER BEAD OF CUT-EDGE SEALANT IS REQUIRED ON CUT EDGES OF REINFORCED TPO MEMBRANE.

3. WHEN USING 60 OR 80-MIL REINFORCED TPO MEMBRANE, APPLY A 4-1/2" (11cm) DIAMETER TPO "T-JOINT" COVER AT ALL FIELD SPLICE INTERSECTIONS.

4. ROOF MEMBRANE SHALL NOT BE ADHERED OVER THE EXPANSION JOINT SUPPORT OR SPONGE TUBING.

VERSICO ROOFING SYSTEMS

© 2024 VERSICO

DECK-TO-WALL EXPANSION DETAIL

AC MEMBRANE OR KEE HP
ASPHALT/COLD APPLIED
APPROVED SUBSTRATE
0 → SEE NOTE(S)

VERSIFLEECE AC OR KEE HP

AC-3.2

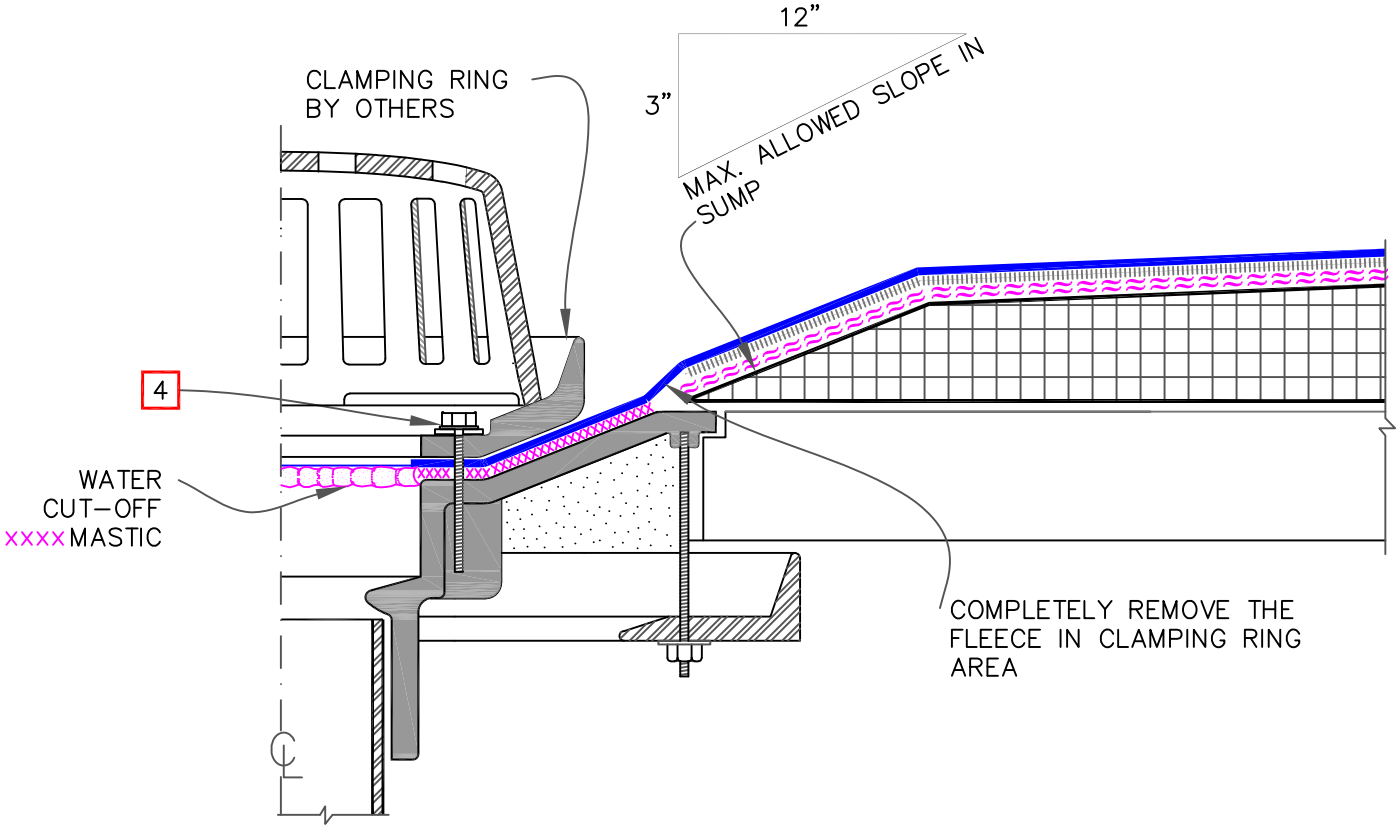

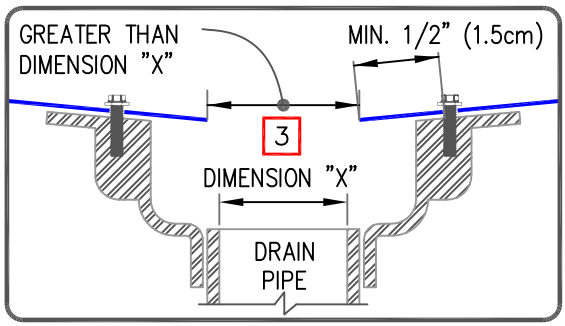

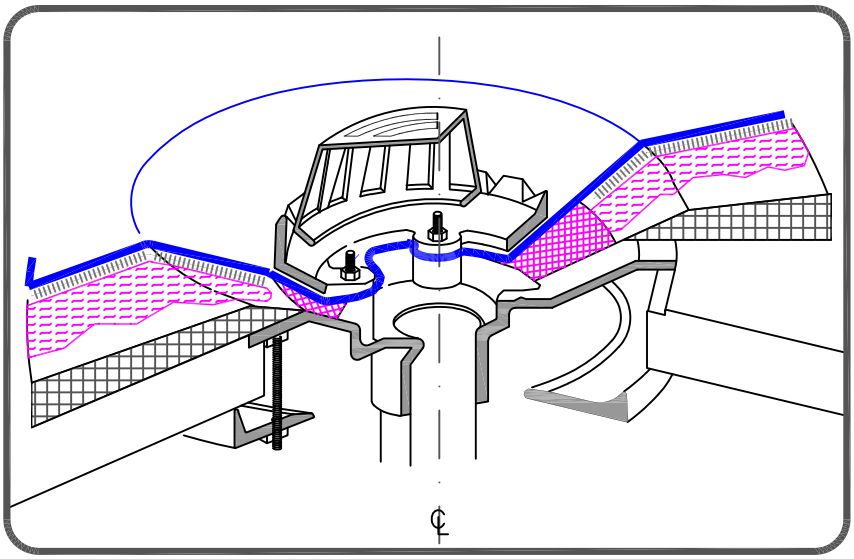

NOTES:

1. REMOVE EXISTING LEAD, FLASHING MATERIAL & ENSURE THE DRAIN RING IS COMPLETELY CLEAN DOWN TO BARE METAL.
2. FLEECE-BACKING MUST BE REMOVED FROM THE MEMBRANE SO THAT WATER CUT-OFF MASTIC IS IN DIRECT CONTACT.
3. THE HOLE IN THE MEMBRANE SHALL EXCEED THE DIAMETER OF THE DRAIN PIPE, BUT SHALL BE NO LESS THAN 1/2" (1.5cm) FROM THE ATTACHMENT POINTS OF THE DRAIN CLAMPING RING.
4. ALL BOLTS OR CLAMPS MUST BE IN PLACE TO PROVIDE CONSTANT COMPRESSION ON WATER CUT-OFF MASTIC.
5. ROOF DRAIN SIZE AND NUMBER OF DRAINS SHALL BE IN ACCORDANCE WITH THE LOCAL CODES.

VERSICO ROOFING SYSTEMS
© 2024 VERSICO

ROOF DRAIN WITH CONTINUOUS MEMBRANE

AC MEMBRANE OR KEE HP
ASPHALT/COLD APPLIED
APPROVED SUBSTRATE
0 → SEE NOTE(S)

VERSIFLEECE AC OR KEE HP

AC-6.1

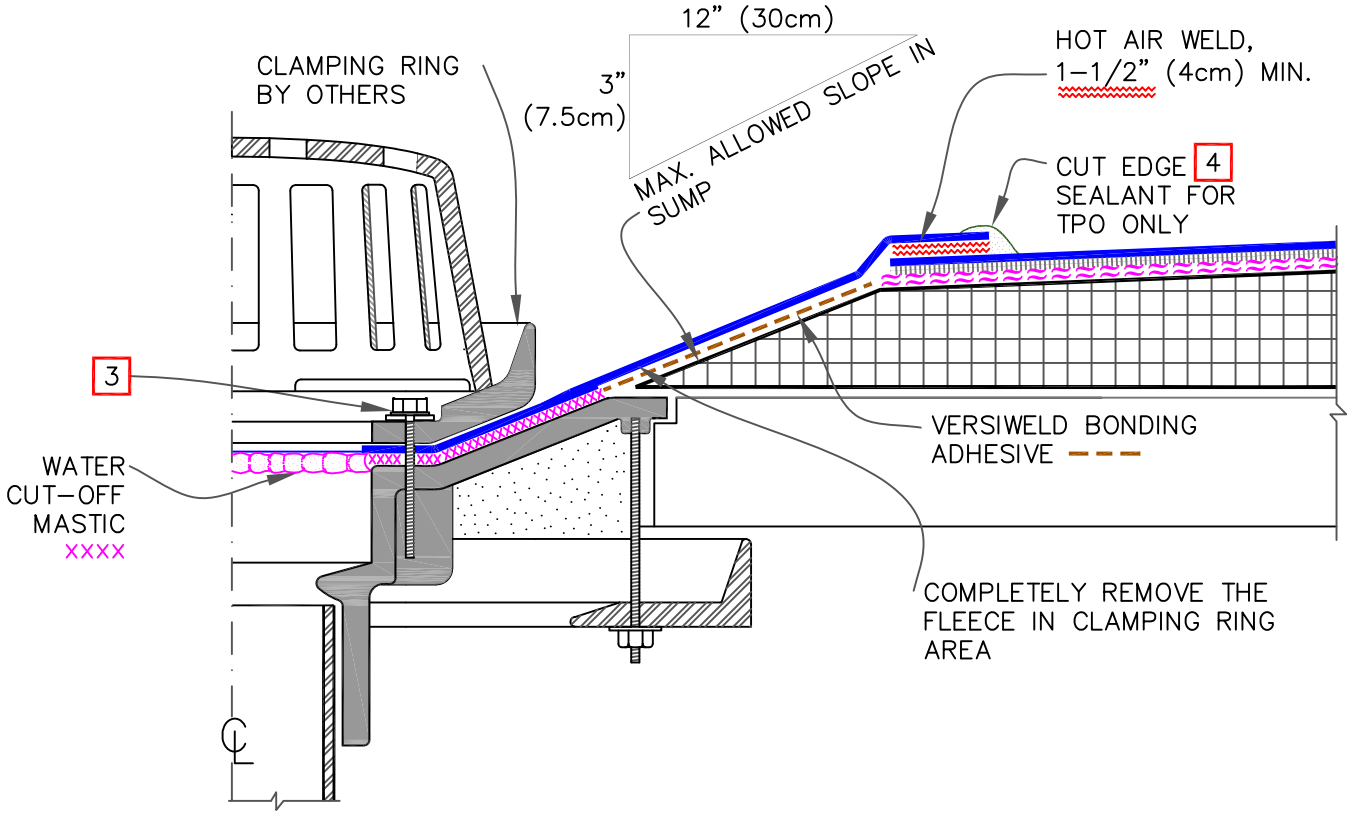

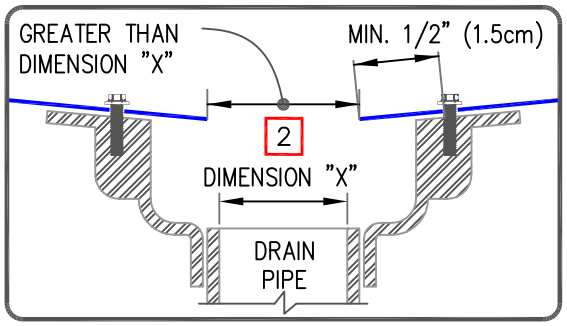

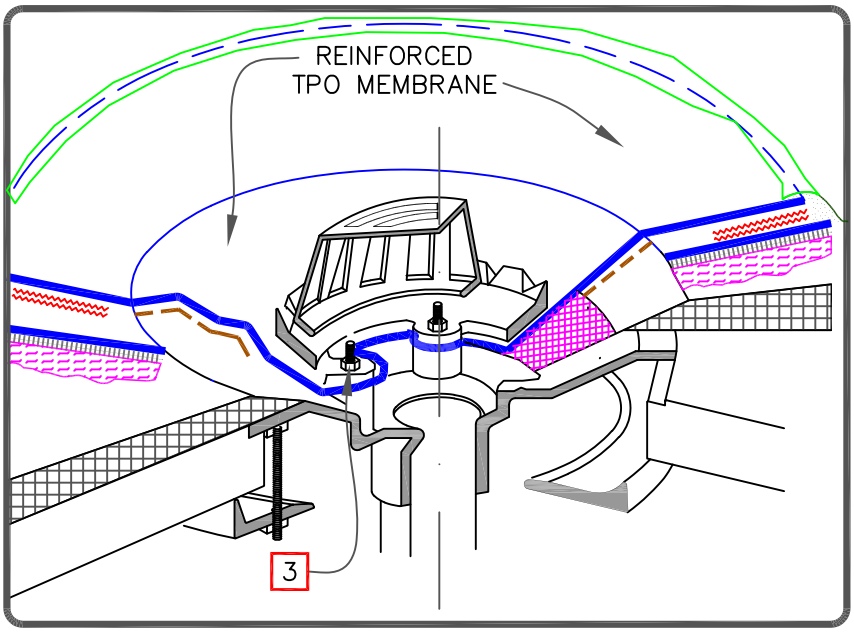

NOTES:

1. REMOVE EXISTING LEAD, FLASHING MATERIAL & ENSURE THE DRAIN RING IS COMPLETELY CLEAN DOWN TO BARE METAL.
2. THE HOLE IN THE MEMBRANE SHALL EXCEED THE DIAMETER OF THE DRAIN PIPE, BUT SHALL BE NO LESS THAN 1/2" (1.5cm) FROM THE ATTACHMENT POINTS OF THE DRAIN CLAMPING RING.
3. ALL BOLTS OR CLAMPS MUST BE IN PLACE TO PROVIDE CONSTANT COMPRESSION ON WATER CUT-OFF MASTIC.
4. APPROXIMATELY 1/8" (0.5cm) DIAMETER BEAD OF CUT-EDGE SEALANT IS REQUIRED ON CUT EDGES OF REINFORCED TPO MEMBRANE.
5. ROOF DRAIN SIZE AND NUMBER OF DRAINS SHALL BE IN ACCORDANCE WITH THE LOCAL CODES.

VERSICO ROOFING SYSTEMS
© 2024 VERSICO

ROOF DRAIN WITH SEPARATE TARGET SPLICE

AC MEMBRANE OR KEE HP
ASPHALT/COLD APPLIED
APPROVED SUBSTRATE
0 → SEE NOTE(S)

VERSIFLEECE AC OR KEE HP

AC-6.2

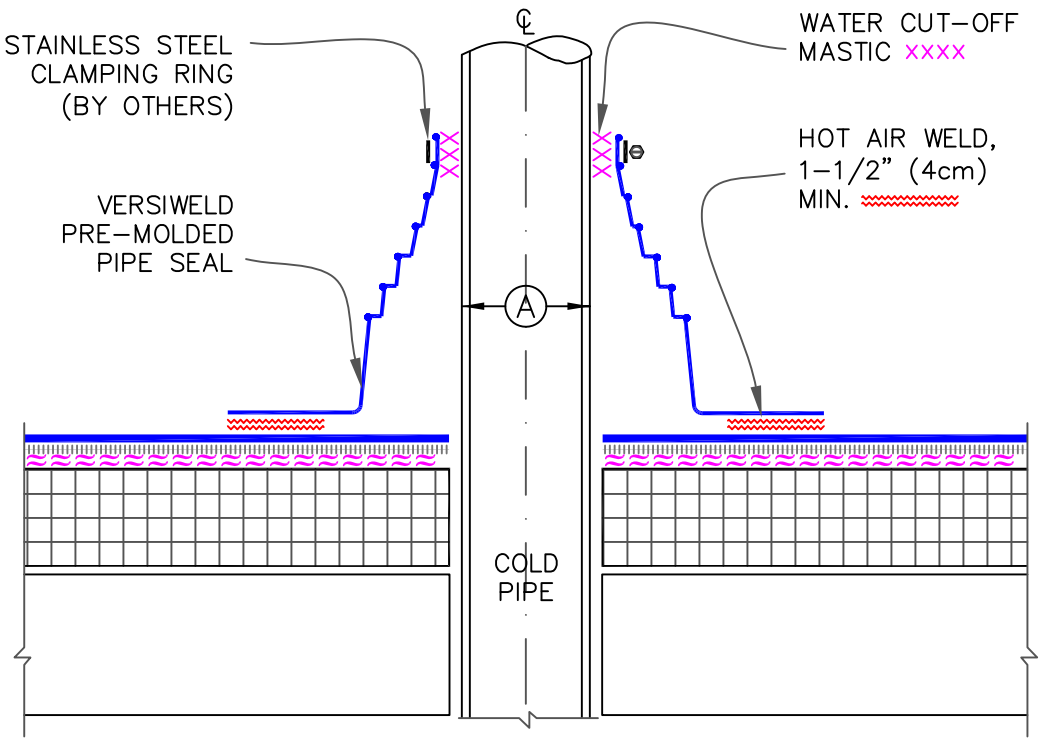

DIMENSIONS		cm	
A	3/4"	2	TO
	8"	20	

NOTES:

1. REMOVE ALL LEAD AND OTHER FLASHING BEFORE INSTALLING PRE-MOLDED PIPE SEAL.
2. TEMPERATURE OF THE PIPE PENETRATION MUST NOT EXCEED 160°F (71°C).
3. PRE-MOLDED PIPE FLASHING MUST HAVE INTACT RIB AT TOP EDGE, REGARDLESS OF PIPE DIAMETER.
4. DECK FLANGES OF THE PRE-MOLDED PIPE SEAL SHALL NOT BE OVERLAPPED, CUT OR APPLIED OVER ANY ANGLE CHANGE.

VERSICO ROOFING SYSTEMS
© 2024 VERSICO

PRE-MOLDED PIPE SEAL

AC MEMBRANE OR KEE HP
ASPHALT/COLD APPLIED
APPROVED SUBSTRATE
0 → SEE NOTE(S)

VERSIFLEECE AC OR KEE HP

AC-8.1

CAUTION

DETAIL NOT FOR USE ON 25-YEAR WARRANTY PROJECTS. ACCEPTABLE PIPE FLASHINGS SHALL CONFORM WITH VERSIFLEECE AC-8.1 OR REFER TO THERMOPLASTIC COMMON DETAILS.

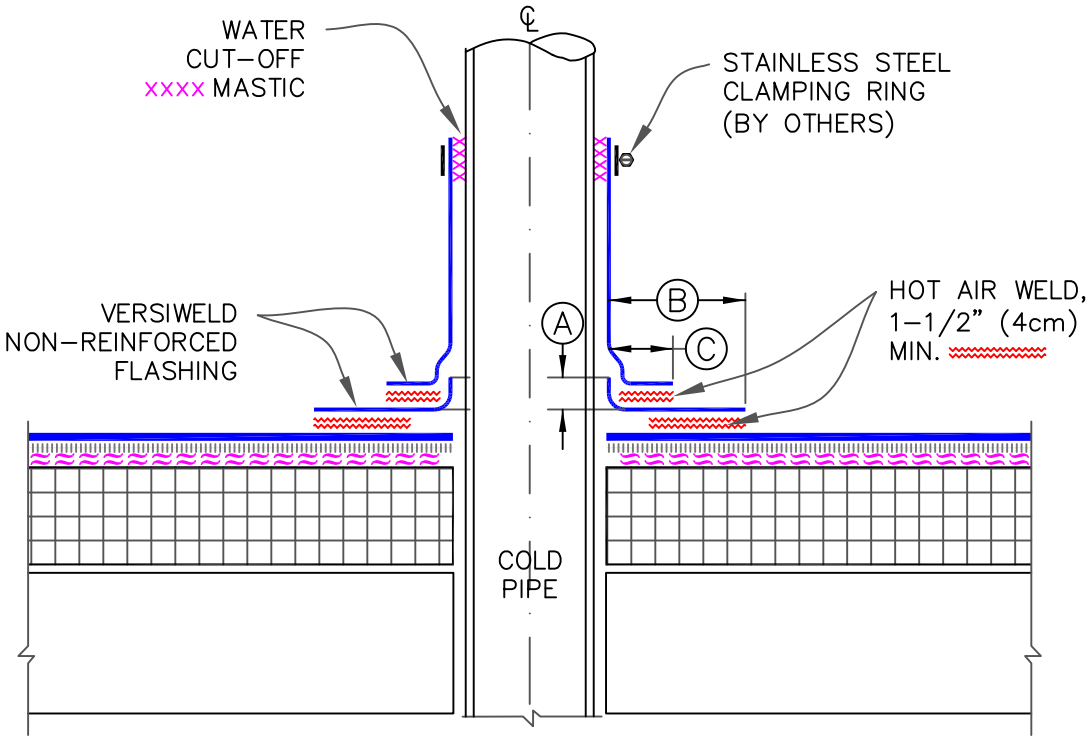

DIMENSIONS		cm	
A	1/2"	1.5	MIN.
B	1-1/2"	4	TO
	2"	5	
C	1"	2.5	MIN.

NOTES:

1. REMOVE ALL LEAD AND OTHER FLASHING BEFORE INSTALLING FIELD FABRICATED PIPE SEAL.
2. TEMPERATURE OF PIPE MUST NOT EXCEED 140°F (60°C) WHEN USING KEE HP AND 160°F (71°C) WHEN USING TPO FLASHING.
3. APPLY HEAT TO FLASHING AND FORM BY HAND PRIOR TO HOT AIR WELDING
4. MECHANICAL SECUREMENT IS REQUIRED AROUND ALL PIPES GREATER THAN 18" (46cm) IN DIAMETER.
5. REFER TO THERMOPLASTIC COMMON DETAILS FOR HOT STACK, STEEL TUBING & FLEXIBLE PENETRATIONS.

VERSICO ROOFING SYSTEMS
© 2024 VERSICO

FIELD FABRICATED PIPE FLASHING

AC MEMBRANE OR KEE HP
ASPHALT/COLD APPLIED
APPROVED SUBSTRATE
0 → SEE NOTE(S)

VERSIFLEECE AC OR KEE HP

AC-8.2

9.1 MECHANICAL TERMINATION WITH COUNTER FLASHING

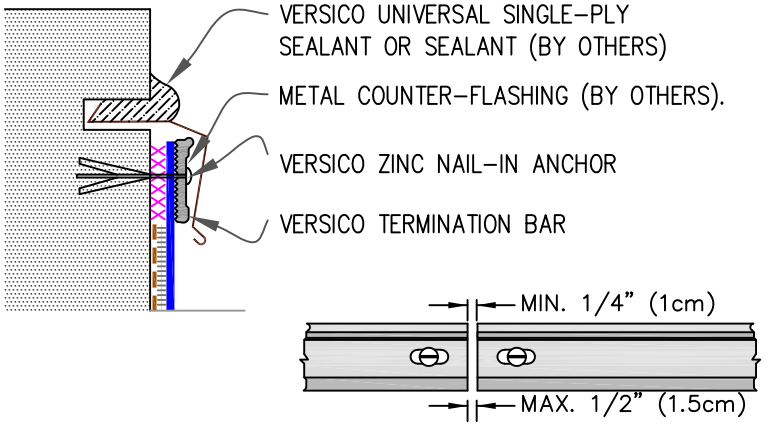

NOTES:
1. APPLY ON HARD SMOOTH SURFACE ONLY; NOT FOR USE ON EXPOSED WOOD.
2. DO NOT WRAP COMPRESSION TERMINATION BAR AROUND CORNERS.
3. FLEECE-BACKING MUST BE REMOVED FROM THE MEMBRANE SO THAT WATER CUT-OFF MASTIC IS IN DIRECT CONTACT.
4. DETAIL 9.5 MUST BE USED AT VERTICAL JOINTS IN PANEL WALLS.

9.2 SHEET METAL COPING

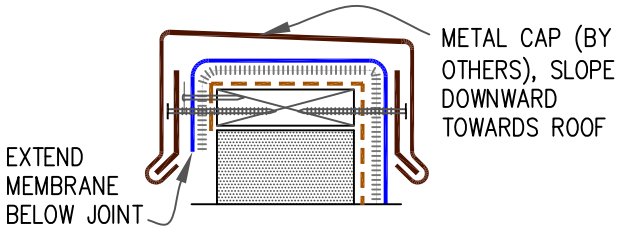

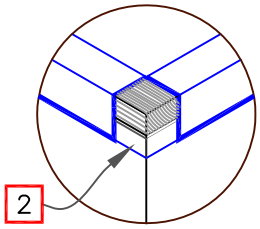

NOTES:
1. FOR VERSICO VERSITRIM COPING, REFER TO INSTALLATION INSTRUCTIONS PUBLISHED SEPARATELY.
2. MEMBRANE MUST BE EXTENDED TO CORNERS TO PROVIDE COMPLETE COVERAGE OF THE TOP WALL SURFACE.

9.3 COUNTER FLASHING TERMINATION

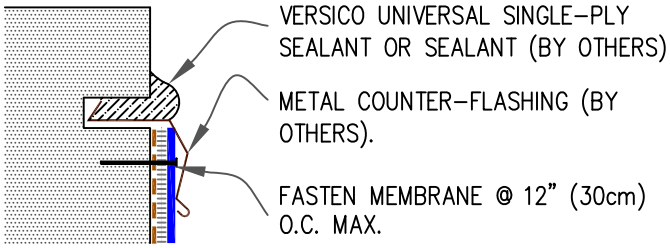

NOTES:
1. WHEN MECHANICAL FASTENERS ARE USED TO PENETRATE THE METAL COUNTER-FLASHING, USE EPDM WASHERS, APPLY WATER CUT-OFF MASTIC UNDER THE COUNTER-FLASHING OR CAULK THE FASTENER HEADS.
2. DETAIL NOT FOR USE ON WARRANTY PROJECTS EXCEEDING 10-YEARS.

9.4 MECHANICAL TERMINATION

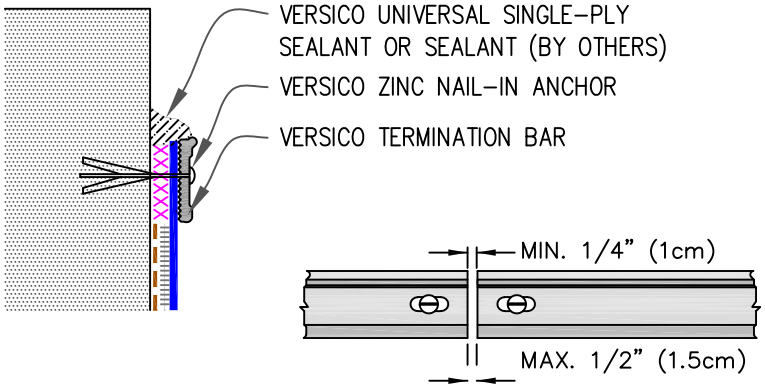

NOTES:
1. APPLY ON HARD SMOOTH SURFACE ONLY; NOT FOR USE ON EXPOSED WOOD.
2. DO NOT WRAP COMPRESSION TERMINATION BAR AROUND CORNERS.
3. FLEECE-BACKING MUST BE REMOVED FROM THE MEMBRANE SO THAT WATER CUT-OFF MASTIC IS IN DIRECT CONTACT.
4. DETAIL NOT FOR USE ON WARRANTY PROJECTS EXCEEDING 20-YEARS.
5. DETAILS 9.5 MUST BE USED AT VERTICAL JOINTS IN PANEL WALLS.

- - - - - -	BONDING ADHESIVE, TYPE III OR IV ASPHALT OR COLD APPLIED ADHESIVE	XXXXXXXX	VERSICO WATER CUT-OFF MASTIC MUST BE UNDER COMPRESSION

VERSICO ROOFING SYSTEMS
© 2023 VERSICO

MEMBRANE TERMINATION

→ AC MEMBRANE OR KEE HP
→ ASPHALT/COLD APPLIED
→ APPROVED SUBSTRATE
0 → SEE NOTE(S)

VERSIFLEECE AC OR KEE HP

AC-9.0

9.5 MECHANICAL TERMINATION AT VERTICAL JOINTS

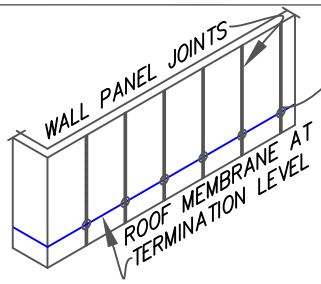

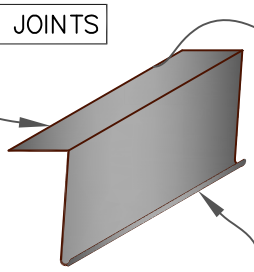

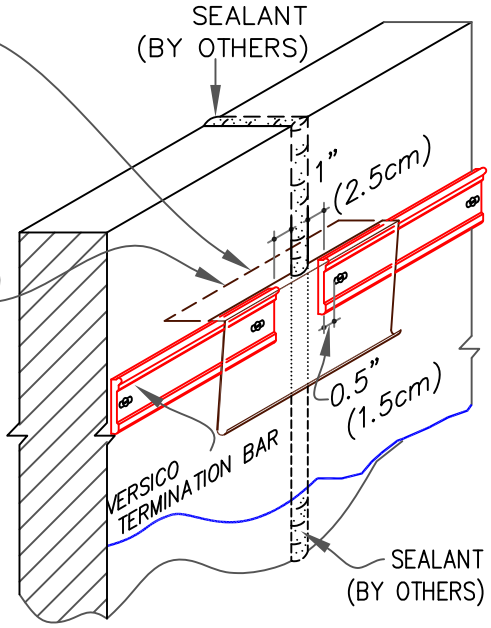

METAL COUNTER FLASHING (BY OTHERS)

NOTES:

1. THIS DETAIL MUST BE USED FOR ANY PROJECT REGARDLESS OF WARRANTY.
2. CONTINUOUS COUNTER FLASHING REQUIRED FOR WARRANTY PROJECTS EXCEEDING 20-YEARS.
3. VERTICAL JOINTS IN THE PRE-CAST PANEL AS WELL AS ALL GAPS AT THE JUNCTION OF THE TILT-UP PANEL AND ROOF DECK MUST BE FULLY SEALED TO PREVENT AIR INFILTRATION.
4. APPLY ON HARD SMOOTH SURFACE ONLY.
5. THIS DETAIL MUST BE USED FOR ANY PROJECT REGARDLESS OF WARRANTY.

9.6 VERSITRIM COPING

COPING

20 GA. GALVANIZED ANCHOR CLIPS @ 6 FEET (183cm) O.C.

CONCEALED SPLICE PLATE AT EACH JOINT OF COPING

HEX-HEAD FASTENERS

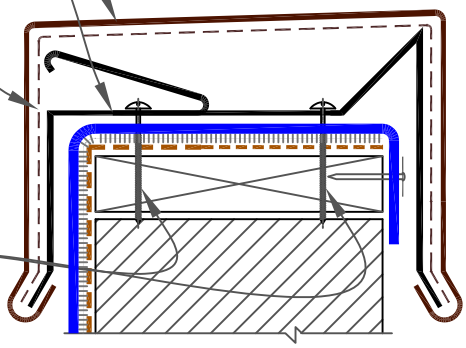

NOTES:

1. MEMBRANE MUST BE EXTENDED AT CORNERS TO PROVIDE COMPLETE COVERAGE OF THE TOP WALL SURFACE. REFER TO DETAIL TPC-9.0B.
2. REFER TO VERSITRIM COPING INSTALLATION INSTRUCTION MANUAL FOR STEP-BY-STEP INSTRUCTION PROCEDURES.

9.7 COPING STONE TERMINATION

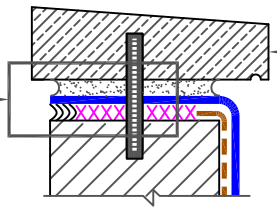

SEE INSET ON RIGHT

COPING STONE (BY OTHERS)

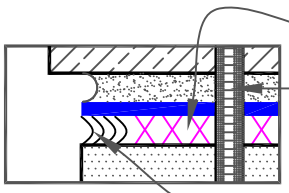

WATER CUT-OFF MASTIC AROUND DOWEL OR ANCHOR

DOWEL OR ANCHOR (BY OTHERS)

SEALANT UNDER THE MEMBRANE LIP (BY OTHERS)

	BONDING ADHESIVE, TYPE III OR IV ASPHALT OR COLD APPLIED ADHESIVE	XXXXXXXX	CARLISLE WATER CUT-OFF MASTIC MUST BE UNDER COMPRESSION

VERSICO ROOFING SYSTEMS
© 2023 VERSICO

MEMBRANE TERMINATIONS
PAGE 2 OF 2

AC MEMBRANE OR KEE HP
ASPHALT/COLD APPLIED
APPROVED SUBSTRATE
0 → SEE NOTE(S)

VERSIFLEECE AC OR KEE HP

AC-9.0

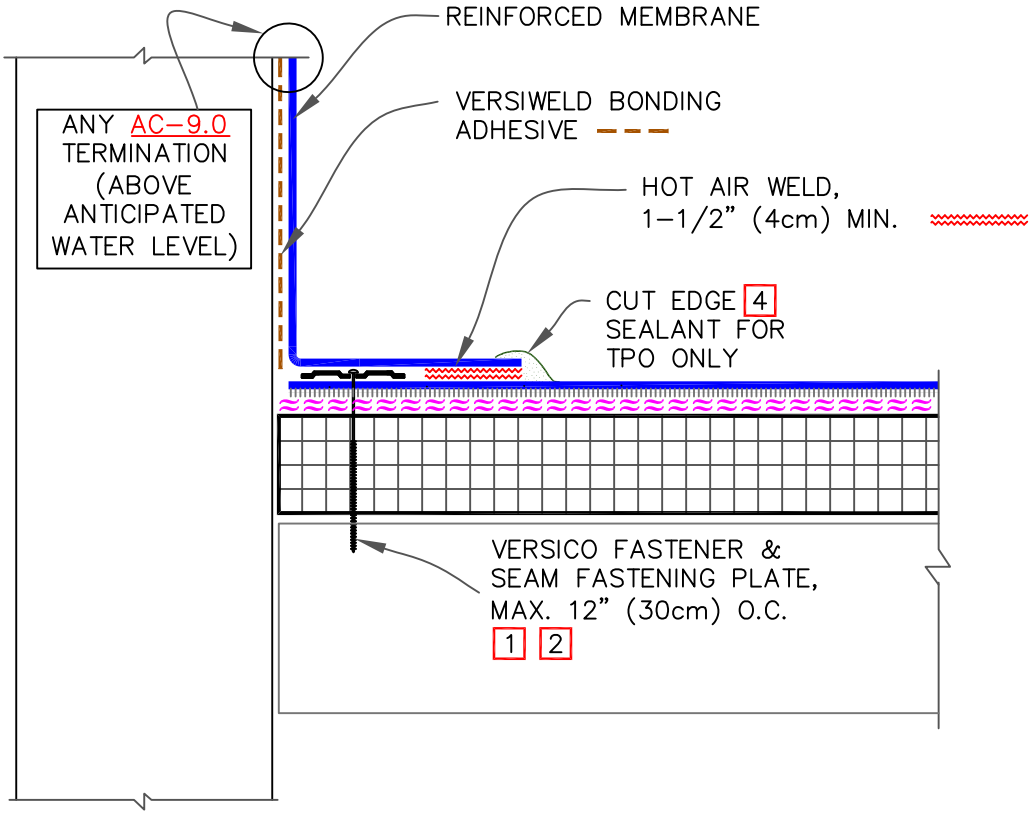

NOTES:

1. MECHANICAL SECUREMENT IS NOT NECESSARY WHEN AC MEMBRANE IS ADHERED WITH HOT ASPHALT.
2. IN A CASE WHERE FASTENERS MUST BE FASTENED INTO THE VERTICAL SUBSTRATE, CARE MUST BE TAKEN TO CREASE THE MEMBRANE TIGHTLY INTO THE ANGLE CHANGE. PLACING THE PLATES TIGHT INTO THE ANGLE CHANGE WILL HELP HOLD THE MEMBRANE IN THE PROPER POSITION.
3. WHEN USING 60 OR 80-MIL REINFORCED TPO MEMBRANE, APPLY A 4-1/2" (11cm) DIAMETER TPO "T-JOINT" COVER AT ALL FIELD SPLICE INTERSECTIONS.
4. APPROXIMATELY 1/8" (0.5cm) DIAMETER BEAD OF CUT-EDGE SEALANT IS REQUIRED ON CUT EDGES OF REINFORCED TPO MEMBRANE.

VERSICO ROOFING SYSTEMS
© 2024 VERSICO

PARAPET/CURB WITH SEPARATE MEMBRANE FLASHING

→ AC MEMBRANE OR KEE HP
→ ASPHALT/COLD APPLIED
→ APPROVED SUBSTRATE
0 → SEE NOTE(S)

VERSIFLEECE AC OR KEE HP

AC-12.1

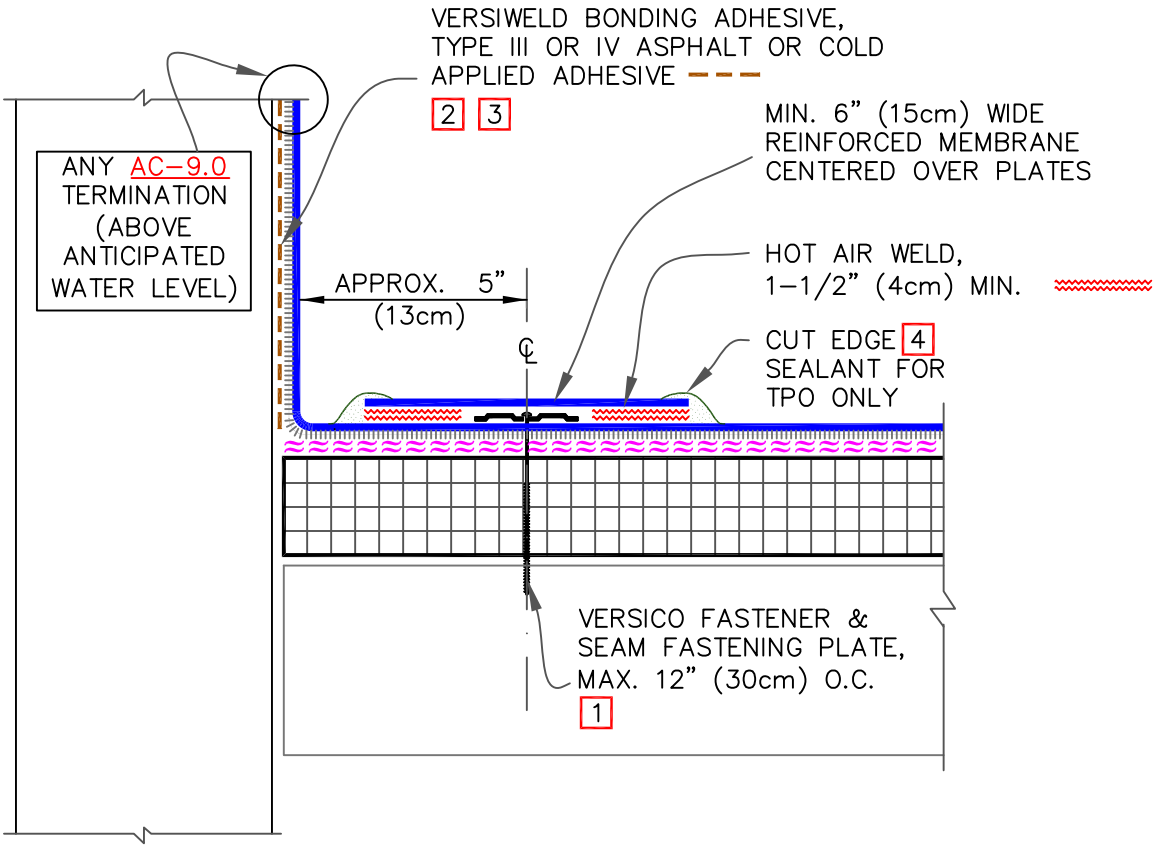

NOTES:

1. MECHANICAL SECUREMENT IS NOT NECESSARY WHEN AC MEMBRANE IS ADHERED WITH HOT ASPHALT.
2. WHEN APPLYING BONDING ADHESIVE TO AC MEMBRANE, APPLY A COAT TO THE FLEECE SIDE OF THE MEMBRANE AND ALLOW TO DRY. ONCE DRY, APPLY A SECOND COAT OF BONDING ADHESIVE TO THE FLEECE SIDE OF THE MEMBRANE AND TO THE SUBSTRATE, ALLOW TO FLASH OFF AND MATE THE TWO SURFACES TOGETHER.
3. WHEN APPLYING ASPHALT OR COLD APPLIED ADHESIVE TO A VERTICAL SUBSTRATE, CARE MUST BE TAKEN TO AVOID DRIPPING OR PUDDLING AT THE BASE OF A WALL. MAXIMUM FLASHING HEIGHT SHALL NOT EXCEED 18" (46cm).
4. APPROXIMATELY 1/8" (0.5cm) DIAMETER BEAD OF CUT-EDGE SEALANT IS REQUIRED ON CUT EDGES OF REINFORCED TPO MEMBRANE.

VERSICO ROOFING SYSTEMS
© 2024 VERSICO

PARAPET/CURB WITH CONTINUOUS MEMBRANE FLASHING

AC MEMBRANE OR KEE HP
ASPHALT/COLD APPLIED
APPROVED SUBSTRATE
0 → SEE NOTE(S)

VERSIFLEECE AC OR KEE HP

AC-12.2

1

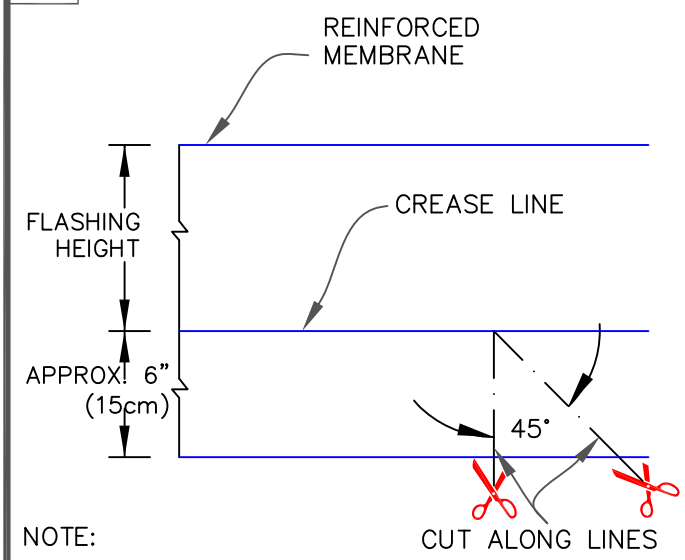

NOTE:

APPROXIMATELY 1/8" (0.5cm) DIAMETER BEAD OF CUT-EDGE SEALANT IS REQUIRED ON CUT EDGES OF REINFORCED TPO MEMBRANE.

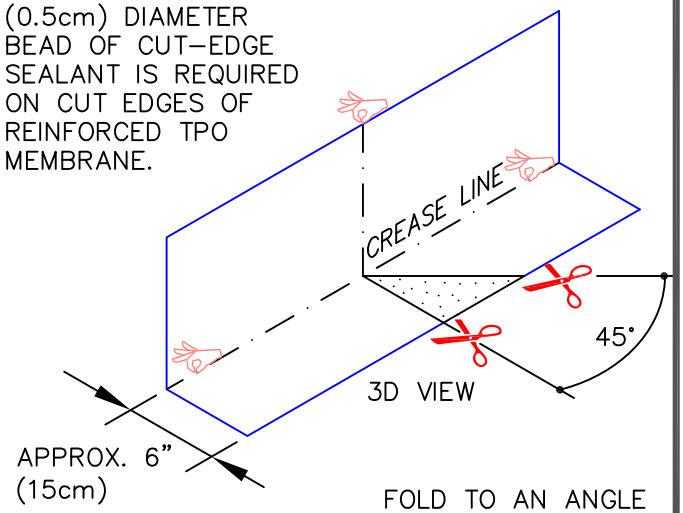

FOLD TO AN ANGLE TO FIT THE EXISTING INSIDE CORNER ANGLE

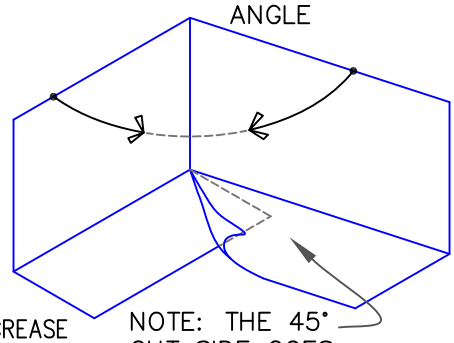

MAKE CREASE

CUT MEMBRANE

NOTE: THE 45° CUT SIDE GOES ABOVE THE 90° CUT SIDE.

2

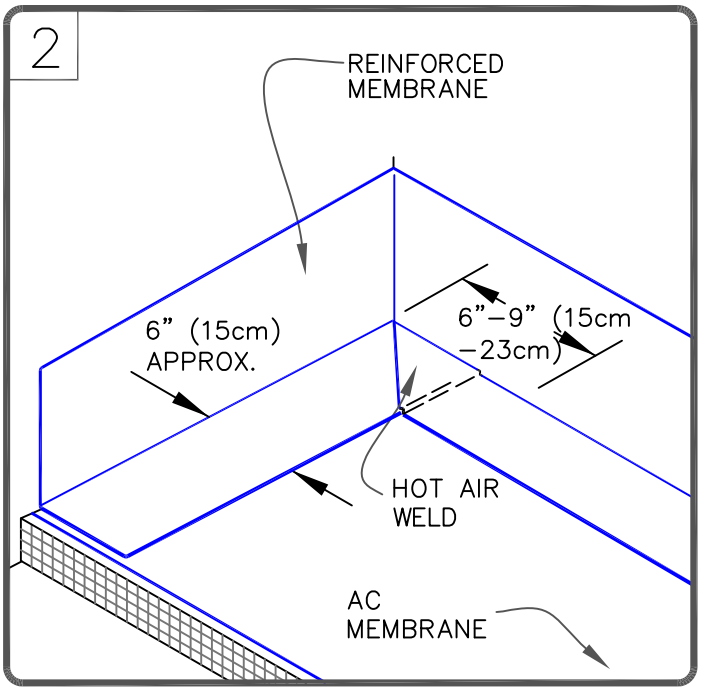

3

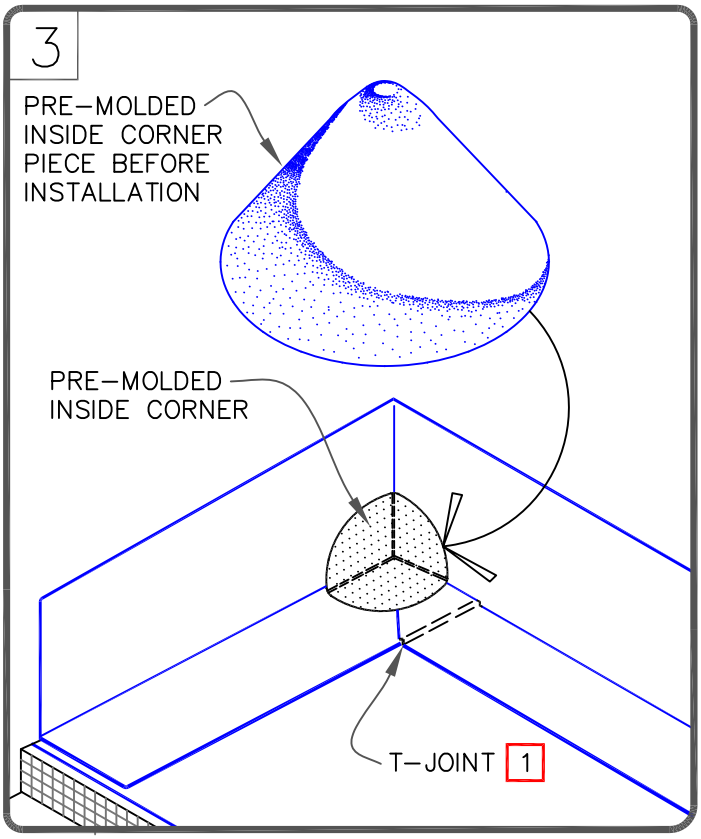

NOTES:

1. WHEN USING 60 OR 80-MIL MEMBRANE, APPLY A 4-1/2" (11cm) DIAMETER "T-JOINT" COVER AT ALL FIELD SPLICE INTERSECTIONS.

VERSICO ROOFING SYSTEMS

© 2024 VERSICO

TPO PRE-MOLDED INSIDE CORNERS

AC MEMBRANE OR KEE HP
ASPHALT/COLD APPLIED
APPROVED SUBSTRATE
0 → SEE NOTE(S)

VERSIFLEECE AC OR KEE HP

AC-15.3

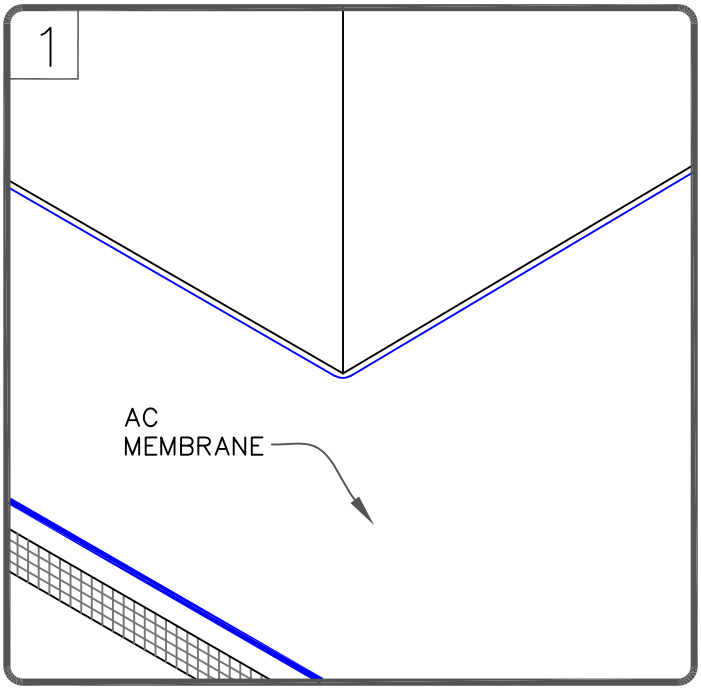

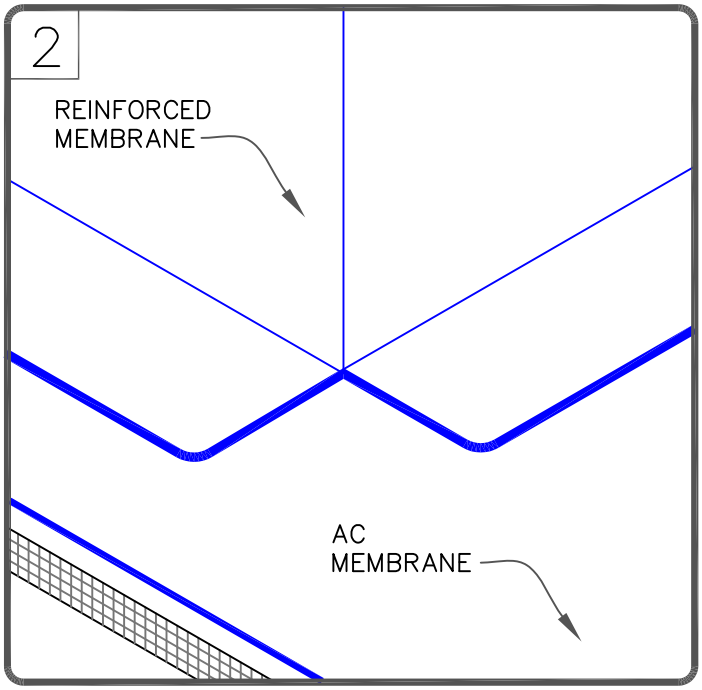

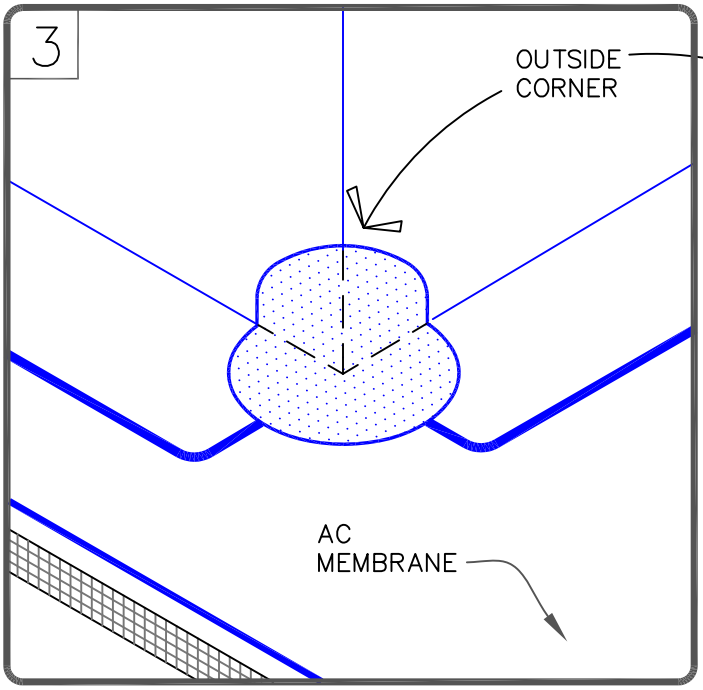

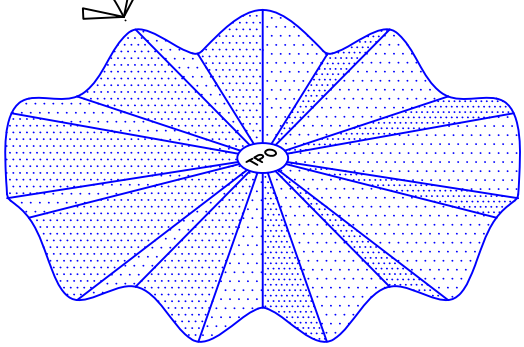

OUTSIDE CORNER
BEFORE INSTALLATION

NOTE:

APPROXIMATELY 1/8" (0.5cm) DIAMETER BEAD OF CUT-EDGE SEALANT IS REQUIRED ON CUT EDGES OF REINFORCED TPO MEMBRANE.

VERSICO ROOFING SYSTEMS
© 2024 VERSICO

TPO PRE-MOLDED OUTSIDE CORNERS

AC MEMBRANE OR KEE HP
ASPHALT/COLD APPLIED
APPROVED SUBSTRATE
0 → SEE NOTE(S)

VERSIFLEECE AC OR KEE HP

AC-15.4

CAUTION

MOLDED SEALANT POCKETS MUST BE USED IN CONJUNCTION WITH RAIN HOODS FOR PROJECTS WITH 25 YEAR WARRANTIES.

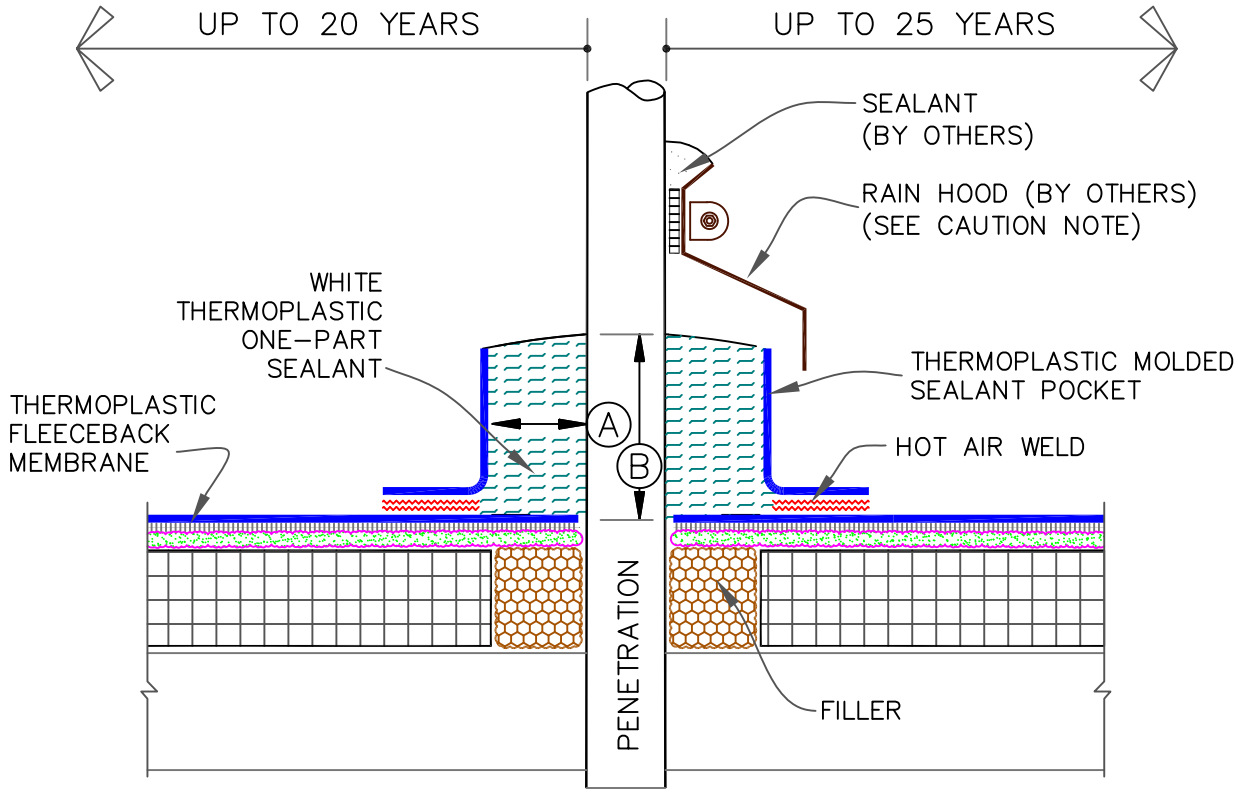

DIMENSIONS		cm	
A	1"	2.5	MIN.
B	2"	5	MIN.

PLACE MOLDED THERMOPLASTIC SEALANT POCKET AROUND PENETRATION AND OVERLAP THE TWO SECTIONS

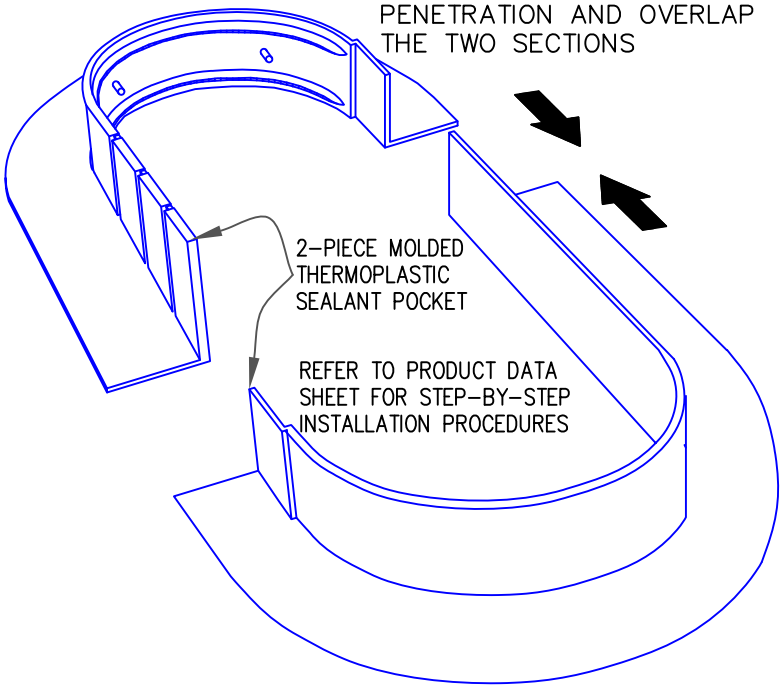

NOTES:

1. TEMPERATURE OF PIPE MUST NOT EXCEED 160°F (71°C).
2. WHEN USING TPO MEMBRANE/MOLDED SEALANT POCKET, APPLY A THIN COAT OF TPO PRIMER TO THE INSIDE AND AROUND THE TOP RIM OF THE POCKET, TO THE DECK MEMBRANE ENCLOSED BY THE POCKET AND TO THE PENETRATION USING A SMALL PAINT BRUSH.
3. ONE-PART SEALANT MUST COMPLETELY FILL MOLDED SEALANT POCKET TO PREVENT PONDING OF WATER.
4. PIPE CLUSTERS MUST HAVE MINIMUM 1" (2.5cm) CLEARANCE BETWEEN PENETRATIONS.

VERSICO ROOFING SYSTEMS
© 2024 VERSICO

TPO MOLDED SEALANT POCKET

AC MEMBRANE OR KEE HP
ASPHALT/COLD APPLIED
APPROVED SUBSTRATE
0 → SEE NOTE(S)

VERSIFLEECE AC OR KEE HP

AC-16.2

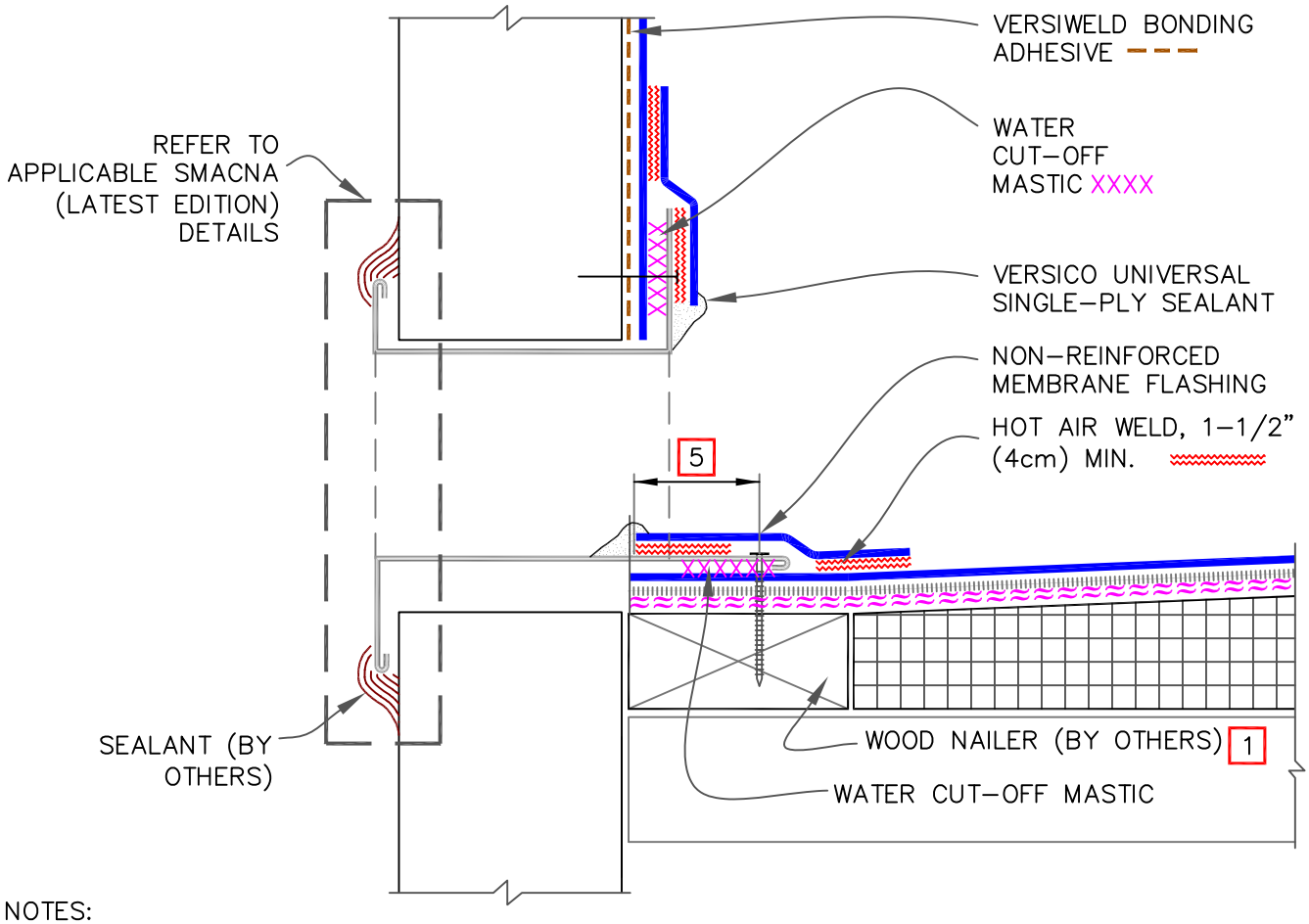

NOTES:

1. WOOD NAILERS ARE INSTALLED ONLY AT SCUPPERS TO SECURE METAL SLEEVE AND MUST EXTEND PAST THE WIDTH OF METAL SLEEVE FLANGE.
2. INSTALL WALL FLASHING PRIOR TO SCUPPER INSTALLATION.
3. METAL SCUPPER BOX MUST HAVE CONTINUOUS FLANGES WITH ROUNDED CORNERS. SOLDER ALL SCUPPER SEAMS WATER-TIGHT.
4. WATER CUT-OFF MASTIC UNDER SCUPPER FLANGE MUST BE UNDER CONSTANT COMPRESSION.
5. SCUPPER FLANGES MUST BE TOTALLY COVERED BY NON-REINFORCED FLASHING WITH MINIMUM 2" (5cm) COVERAGE PAST NAIL HEAD.
6. UNIVERSAL SINGLE-PLY SEALANT IS REQUIRED AT FLASHING EDGES ON SCUPPER EDGE. TPO PRIMER MUST BE USED TO PREPARE SURFACES PRIOR TO THE APPLICATION OF SEALANT.

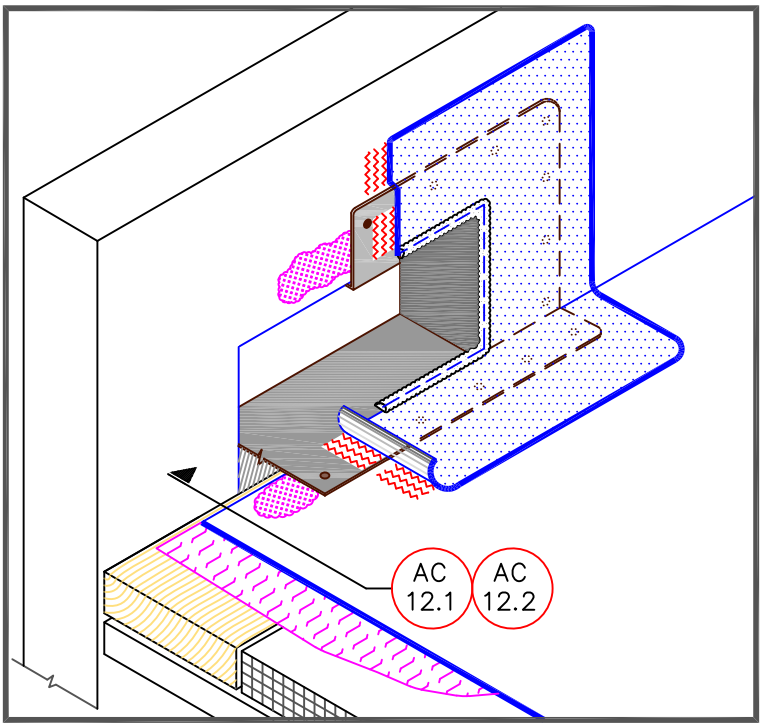

VERSICO ROOFING SYSTEMS
© 2024 VERSICO

THROUGH-WALL SCUPPER WITH TPO COATED METAL

AC MEMBRANE OR KEE HP
ASPHALT/COLD APPLIED
APPROVED SUBSTRATE
0 → SEE NOTE(S)

VERSIFLEECE AC OR KEE HP

AC-18.2

SPECIFICATION SUPPLEMENT

Table of Contents

January 2024

The information contained in this generic specification represents a part of Versico's requirements for obtaining a roofing system warranty. Construction materials and practices, building siting and operation, climatic conditions, and other site-specific factors will have an impact on the performance of the roofing system. Versico recommends that the building owner retain a design professional to determine appropriate design measures to be taken in order to address these factors.

The information contained in these Supplements are to serve as a criteria for Specifiers and Authorized Contractors regarding the design and installation of Versico Roofing Systems and related products. Additional information essential for the design and installation of the roof systems mentioned herein are also included in the respective Specification for each Roof System and in the Design Reference Section of the Versico Technical Manual. Specifiers and Authorized Contractors are advised to reference all applicable sections.

General

VersiFleece Membrane and Insulation Attachment with Flexible DASH Adhesive…… G-02-22

Fully Adhered Application Over Lightweight Insulating Concrete…… G-03-20

Flashing Considerations /Metal Work…… G-04-22

Roof Walkway Installation…… G-05-21

Daily Seal / Clean Up…… G-06-20

Application Procedures for 725TR Air and Vapor Barrier…… G-07-20

Insulation Attachment and Details…… G-08-23

Aqua Base 120 Bonding Adhesive…… G-09-21

Metal Edging…… G-10-18

LIQUISEAL Liquid Flashing…… G-11-20

Application Procedures for VapAir Seal MD Air and Vapor Barrier…… G-12-19

VacuSeal Vent Secure Roofing Systems…… G-13-23

DeckVent Roof Assembly for Lightweight Structural Concrete Decks…… G-14-21

Flexible DASH Adhesive Equipment and Set Up Requirements…… G-15-22

Plaza Paver Systems…… G-16-22

Electronic Leak Detection (ELD) Systems…… G-17-23

Products

Related Products…… P-01-22

Thermoplastics

Heat Welding Equipment…… T-01-23

EPDM

VersiGard Polyepichlorohydrin (ECO/CO) Membrane Installation Procedure…… E-01-21

EPDM Membrane Splicing and Splice Repairs …… E-02-20

VERSICO ROOFING SYSTEMS

SPECIFICATION SUPPLEMENT

G-02-22

VersiFleece and Insulation Attachment and Coverage Rates with Flexible DASH Adhesive

January 2024

The information contained in this supplement serves as criteria for Specifiers and Authorized Contractors regarding the design and installation of Versico Roofing Systems and related products. Additional information essential for the design and installation of the Roof Systems mentioned herein are also included in the respective Specification for each Roof System and in the Design Reference Section of the Versico Technical Manual. Specifiers and Authorized Contractors are advised to reference all applicable sections.

A. General

Flexible DASH Adhesive may be used to attach the following roof insulations to an approved roof deck/substrate:

1. 1” (Min.) Polyisocyanurate, 1/2” SecurShield HD, 1/2” SecurShield HD Plus, 1.5” DuraFaceR, 1/2” DuraStorm VSH, 1/2" Versico Recovery Board, 1/4” Securock or minimum 1/4” DensDeck or DensDeck Prime or DensDeck StormX. If tapered Polyisocyanurate insulation is used, 1/2” minimum thickness is acceptable.

2. Expanded Polystyrene (EPS) insulation overlaid with SecurShield HD, 1/2” SecurShield HD Plus, Versico Recovery Board, Securock or DensDeck/DensDeck Prime. A composite board can be used to eliminate the need for an additional layer of Flexible DASH Adhesive.

3. Extruded Polystyrene insulation overlaid with 1/2” SecurShield HD, 1/2” SecurShield HD Plus, 1/2” DuraStorm VSH, Versico Recovery Board, Securock, or DensDeck/DensDeck Prime or DensDeck StormX.

4. When oriented strand board (OSB) is proposed as the membrane underlayment, a polyisocyanurate/OSB composite board may be used since attachment of individual OSB panels is not recommended due to board stiffness and potential bowing on uneven surfaces.

   Insulation board sizes up to 4' x 8' may be used providing full attachment (full spray, equipment (rig) splatter, 4” or 6” o.c. extrusions) is achieved. Trimming or slitting of boards may be required on uneven surfaces. If necessary, use maximum 4' x 4' boards so full embedment of boards may be achieved.

B. Cautions and Warnings

1. Do not apply Flexible DASH Adhesive when surface and/or ambient temperatures are below 25°F (-4°C). The temperature of Flexible DASH Adhesive must be between 70°F (21°C) and 90°F (32°C), at the time of use. Use blanket heaters and hot boxes when necessary.

2. Flexible DASH may be applied when surface and/or ambient temperatures are below 25°F (-4°C) when heated equipment is used that includes the following: heated blankets, preheater, and heated hose.

3. When using Flexible DASH Adhesive in non-heated spray equipment, substrate and/or ambient temperatures must be between 25°F (-4°C) and 120°F (49°C).

VERSICO ROOFING SYSTEMS

4. **Bead Adhesive Spacing –** Beads must be applied following spacing approved for specific project conditions (i.e. height, wind zone, and warranty wind speed coverage).

   a. 12-inch on-center bead spacing is accepted in the field of the roof. Projects with higher wind speed coverage will require narrower spacing between beads.

   b. Perimeter bead spacing is typically at 6-inches on-center except for those projects with higher wind speed coverage where narrower bead spacing of 4-inches on-center may be required.

   c. Refer to **Detail A-27.7** (located in **Spec Supplement G-08-23**) and **Detail VF-27** in VersiFleece Specification for Membrane Attachment using Bead Adhesive approved by Versico or contact Versico prior to installation.

   d. Substrate irregularity, which is commonly associated with gravel surfaced built-up roofing, must be compensated to ensure insulation boards are fully embedded. Do not apply thin beads of adhesive (less than 1/2-inch width wet bead for Non-Dual Tank Applications and 1.5" wide wet bead for Dual Tank Applications), and if necessary increase width of the adhesive bead in uneven areas.

5. **Residual Asphalt**

   a. **Incompatibility of the Substrate (Residual Un-Weathered Asphalt) –** While urethane adhesive is compatible with existing asphaltic roofs that have been exposed and weathered, it is difficult to adhere to **slick, smooth and un-weathered asphalt**. This condition may be encountered when an existing roof is removed, exposing an asphaltic vapor barrier or leaving asphalt residue.

   b. To ensure proper adhesive attachment, one of the following options may be followed:

      1) Prime the surface with Versico's CAV-GRIP 3V, CCW-702, CCW-702LV or CCW-702WB Primer for splatter and bead application.

      2) Switch to Full Spray of Flexible DASH Adhesive applied from heated spray rig to increase surface contact. 100% coverage is required. Splatter applications are not accepted.

      3) Install Versico's VapAir Seal 725TR Air & Vapor Barrier with CAV-GRIP 3V, CCW-702, CCW-702LV or CCW-702WB Primer over the existing asphalt.

      4) Use mechanical securement to attach the first layer of insulation in lieu of adhesive.

6. **Air Infiltration**

   a. On structural concrete decks, gaps between the structural deck and walls and those around penetrations, allows hot humid air from within the building to infiltrate the roofing assembly and possibly condense during the cold season. Lower membrane temperature, especially those associated with white membranes, increase the probability of condensation and promote freezing during low temperatures. Collected frozen moisture trapped above the structural deck when thawed, will eventually lead to weakening of the bottom insulation facer. Weakening of the bottom of the insulation facer can subsequently lead to separation of the foam during a wind event.

      It is important to seal gaps around the perimeter and around penetrations, refer to **Design Reference DR-01-21 "Construction Generated Moisture"**, to eliminate moisture infiltration.

   b. The same phenomenon with migrating moisture could occur on steel decks, where gaps are not sealed or vapor retarders are not used. In such a case, condensed moisture could result in insulation gapping, rusting of metal fasteners or steel decks and cause insulation to become wet. Refer to **Design Reference DR-01-21 "Construction Generated Moisture"**.

C. **Roof Deck/Substrate Criteria**

Flexible DASH Adhesive can be used to attach insulation to new or tear-off construction over structural concrete, fibrous cement (i.e., Tectum), gypsum, cellular or perlite lightweight insulating concrete (min. 225 psi compressive strength), wood and steel decks.

Flexible DASH Adhesive may also be used to attach insulation to an existing asphalt or coal tar pitch, modified bitumen or mineral surfaced cap sheets as follows:

1. On tear off projects, the existing roof deck must be investigated and all wet and deteriorated material must be replaced. All loose base sheet material or asphalt must be removed prior to Flexible DASH Adhesive application.

2. The deck surface must be cleaned using compressed air, vacuum equipment or hand/power brooms to remove dust, loose dirt or debris. If excessive dust or dirt is present, a primer may be required prior to application of the adhesive. Contact Versico for specific primer requirements.

3. For new galvanized steel decks, power washing is required to remove finishing oils, if present.

4. For projects with existing Type III or IV asphalt, coal tar pitch, modified bitumen or mineral surface cap sheets, the existing roof must be inspected to determine if moisture is present within the existing assembly. Wet insulation and membrane shall be removed and replaced with compatible materials.

   a. Blisters, buckles, wrinkles and fishmouths shall be cut out or mechanically fastened.

   b. Remove loose gravel, dust and residue from a gravel surfaced BUR by using a Hydro-Vac (wet vacuum equipment). Power vacuum equipment or a power sweeper followed by air blowing or another suitable means are also acceptable. Care shall be exercised in areas where evidence of ponding is obvious (remove residue from low areas prior to proceeding).

   CAUTION: On coal tar pitch, when using white membrane, minimum 1” thick polyisocyanurate is the required membrane underlayment. If gray or tan membrane is used, minimum 1.4" thick polyisocyanurate is required.

D. **Adhesive Coverage Rates**

1. The overall coverage rate for Flexible DASH Adhesive will vary depending on jobsite conditions, product container size, and the substrate as follows:

Flexible DASH Adhesive Coverage Rates					
Approximate Coverage Rate (Sq. Ft.)					
Package Type	**Full Spray**	**Splatter**	**4" o.c.**	**6" o.c.**	**12" o.c.**
Dual Cartridges	N/A	N/A	100-200	200 -300	400 - 600
Dual Tanks	N/A	2,600-2,800	1,100-1,300	1,700-1,900	3,500-3,700
5-Gallon Jugs	1,000	1,800-2,000	670 - 900	1,000 - 1,250	2,000 - 2,500
15-Gallon Drums	1,800-3,000	5,400-6,000	2,110-2,700	3,000-3,750	6,000-7,500
50-Gallon Drums	5,000-10,000	18,000-20,000	6,700 - 9,000	10,000 - 12,500	20,000 - 25,000

Fig 1. Full Spray Application

2. **Full Spray Application and Coverage Rates** (See Figure 1 above)

   a. Flexible DASH is to be dispensed by the appropriate spray rig and gun to achieve 100% coverage of the substrate at a rate of 1 gallon per 100 square feet. Substrate irregularity, which is commonly associated with gravel surface, built-up roofing, may take up to 2 gallons per square to compensate so the insulation boards are fully embedded in tot the Flexible DASH.

   b. To achieve proper coverage, spray in a horizontal, sweeping motion, overlapping each new pass with the previous pass by 50%.

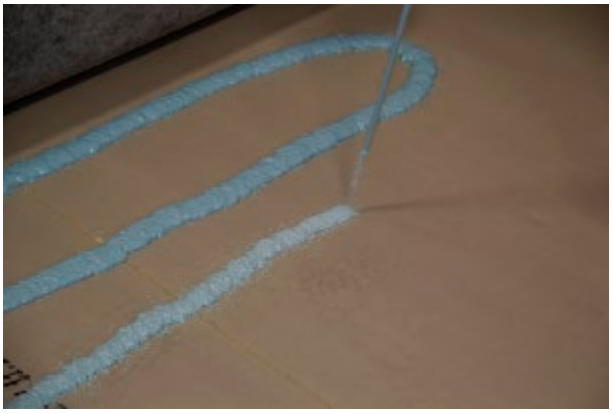

Fig 2. Bead Application

3. **Bead Application and Coverage Rates** (See Figure 2 above)

   a. Flexible DASH is to be dispensed in ribbons or beads to achieve spacing approved for specific project conditions (i.e. height, wind zone and warranty wind speed coverage).

Fig 3. Correct Coverage – Splatter Application

Fig 4. Light Coverage – Splatter Application

4. **Splatter Application and Coverage Rates** (See Figures 3 and 4 above)

   a. Spray Rig and Gun

      1) Flexible DASH is to be dispensed by the appropriate spray rig and gun to achieve 50% coverage of the substrate at a rate of 1/2 gallon per 100 square feet.
      2) To achieve proper coverage, spray in a horizontal, sweeping motion, from a minimum 24” height, overlapping each new pass with the previous pass by 50%.
      3) Adhesive should be applied in large droplets, not a fine mist. Air pressure is too high if the adhesive is in a fine mist.

   b. Dual Tanks

      1) Flexible DASH is to be dispensed using Dual Tanks to achieve 50% coverage of the substrate at a rate of 3.75 lbs per 100 square feet.
      2) To achieve proper coverage, spray in a horizontal, sweeping motion, from a minimum of 24” height, overlapping each new pass with the previous pass.
      3) When applying, the 14” extension nozzle should NOT be used.

E. **Installation Criteria**

1. Check to ensure the substrate is dry. Flexible DASH Adhesive cannot be applied to a wet or damp surface.

2. Dispense Flexible DASH Adhesive over the dry substrate area at the coverage rate indicated previously to allow for full coverage, splatter or proper bead spacing.

3. Allow the adhesive to rise up approximately 1/4" to 3/4”, depending on dispensing method, and develop strings prior to setting insulation boards into adhesive.

Note: String-time is measured by touching the adhesive with a splice wipe and looking for development of “strings” of adhesive as you pull the splice wipe out of the adhesive. With Flexible DASH Adhesive, string time is generally around 1-1/2 – 2 minutes after application at room temperature.

4. Walk the boards into the adhesive and roll using the 30” wide, 150 lb weighted segmented steel roller to ensure full embedment. The proper roller can be purchased from Rooftop Equipment or one of their distribution partners. Optimal set up time should be approximately 5 to 7 minutes.

CAUTION: Walking on the boards immediately after placement in adhesive can cause slippage/movement until the adhesive has started to set up. On roofs with a slope greater than 1/2" in 12", begin adhering insulation at the low point and work upward to avoid slippage. One person should be designated to walk/roll in all boards and trim/slit or apply weight as needed to ensure adequate securement.

CAUTION: If boards easily slide, string time has not been achieved.

5. Position all edges of the boards on the top flutes of steel decks for adequate support.

6. If multiple layers of insulation are specified or required, spray, equipment (rig) splatter or bead-apply Flexible DASH Adhesive over the base layer once fully secured and follow procedures noted above for attachment of each insulation layer.

Copyright 2024 Versico

Versico and Flexible DASH Adhesive are Trademarks of Versico

DensDeck and DensDeck Prime is a Trademark of Georgia-Pacific Gypsum LLC

This Spec Supplement represents the applicable information available at the time of its publication. Owners, Specifiers and Versico authorized roofing contractors should consult Versico or their Versico Independent Sales Representative for any information that has subsequently been made available.

Review the appropriate Versico Warranty for specific warranty coverage, terms, conditions and limitations.

SPECIFICATION
SUPPLEMENT

G-03-20

Fully Adhered Applications Over Lightweight Insulating Concrete For EPDM, TPO and VersiFleece Membranes

January 2024

This supplement is to serve as criteria for Specifiers and Authorized Contractors regarding Direct Application Over Lightweight Insulating Concrete. For installation details Specifiers and Authorized Contractors are advised to reference all applicable technical manuals/details or the Versico website.

When specified, the EPDM and TPO membranes or VersiFleece (TPO, PVC or KEE HP) membrane may be fully adhered directly to an approved **cellular or perlite lightweight insulating concrete** with a minimum compressive strength of 225 psi.

A. EPDM membrane can be fully adhered with Versico's EPDM Bonding Adhesive. Versico's TPO Bonding Adhesive shall be used when using TPO membrane. Maximum warranty available (Non-VersiFleece membrane) for direct application is 15 year with peak gust wind speed of 55 mph.

B. Flexible DASH Adhesive must be used when VersiFleece (TPO, PVC or KEE HP) membrane is specified. Maximum warranty available with VersiFleece 115-mil membranes for direct application is 20 year with peak gust wind speed of 80 mph.

C. For direct application over **cellular** lightweight insulating concrete, Aqua Base120 can be used as a two-sided contact adhesive with Non-VersiFleece (EPDM, TPO or PVC) membrane. When Aqua Base 120 Bonding adhesive is specified refer to **Spec Supplement G-09-18 "Aqua Base 120 Bonding Adhesive"** for Warranty information.

   Note: Use of VersiFleece membranes in conjunction with Water Based adhesives over lightweight insulating concrete is not permitted.

Non-VersiFleece membranes are not to be fully adhered directly to **vermiculite lightweight insulating concrete.** When a VersiFleece membrane is to be fully adhered directly to **vermiculite lightweight insulating concrete,** Versico must be contacted to determine applicable requirements pertaining to priming, venting, warranty duration and wind speed coverage.

Projects where the VersiFleece membrane has been approved will be limited to a wind speed coverage of 55 mph peak gust wind speed unless otherwise approved by Versico.

The Authorized Contractor must provide Versico with a copy of a certification letter from the lightweight insulating concrete manufacturer (on new construction projects), which references the project name and location and contains the manufacturer's brand name, minimum compressive strength, average wet and air dry densities.

Application Cautions

1. The substrate must be dry, free of debris, fins, frost, loose and foreign materials. Fill any gaps in the substrate greater than 1/4" with Flexible DASH Adhesive or VapAir Seal 725TR or VapAir Seal MD (when VersiFleece membrane is to be used or other appropriate material).

2. Do not proceed with membrane installation until the lightweight insulating concrete has cured a minimum of 48 hours. If necessary, consult with the lightweight insulating concrete manufacturer concerning additional drying time.

3. After rain or other precipitation, follow the manufacturer's requirements concerning proper visual inspection and additional drying time prior to adhering the membrane.

4. Prior to membrane installation, darker areas, especially along hairline cracks in the concrete, may serve as an indication of moisture entrapment and possible standing water beneath the surface. If this condition is found, consult with the lightweight insulating concrete manufacturer for proper corrective measures.

5. Except when lightweight insulating concrete is poured over slotted steel decks, the authorized roofing contractor must conduct core cuts at the minimum rate of 1 every 2,000 square feet. The core cuts should be located around hairline cracks (if present) where darker areas are visible. After core cuts have been taken, the substrate must be examined for evidence of moisture above the structural deck and, if found, a wet/dry vacuum system, as recommended by the lightweight insulating concrete manufacturer, must be utilized to remove standing water from beneath the surface of the concrete.

    a. To ensure the efficient operation of the vacuum system, a tight seal must be provided between the nozzle of the vacuum and the lightweight concrete substrate.

    b. Versico's Non-Weldable or Weldable, One-Way Pressure Relief Breather vents, must be installed over each core cut in accordance with Versico Detail. See **Spec Supplement P-01-20 "Related Products"** for more information.

Copyright 2024 Versico

Versico, VersiWeld, Flexible DASH and VersiFleece are Trademarks of Versico

This Spec Supplement represents the applicable information available at the time of its publication. Owners, Specifiers and Versico authorized roofing contractors should consult Versico or their Versico Independent Sales Representative for any information that has subsequently been made available.

Review the appropriate Versico Warranty for specific warranty coverage, terms, conditions and limitations.

SPECIFICATION SUPPLEMENT

G-04-22

Flashing Considerations / Metal Work

January 2024

This supplement is to serve as criteria for Specifiers and Authorized Contractors regarding flashing of walls, curbs, metal work, pipes, drains and other penetrations for EPDM, Thermoplastics, AC and VersiFleece membranes. For individual roofing system information, Specifiers and Authorized Contractors are advised to reference the appropriate roofing system specification and associated roofing details.

A. General Flashing Considerations

1. For projects specified with a greater than 20 year membrane system warranty, Versico's Termination Bar in conjunction with Water Cut-Off Mastic, must be specified under all metal counterflashings. Refer to applicable Versico Detail.

2. The height of the new wall flashing and termination must extend above the anticipated water level (due to heavy rain) or slush line (due to water under accumulated snow).

3. All existing loose flashing must be removed prior to the application of new membrane. New membrane flashing must extend above all existing intact flashing but must not conceal weep holes or cover existing through wall counterflashing.

4. Install surface mounted reglets and compression bar terminations directly to the wall surface.

5. Bitumen based roof cement must be removed or concealed with an acceptable underlayment.

CAUTION: Residual asphalt left on walls and curbs could cause discoloration of white membranes. All residual asphalt must be primed with one of the following, CAV-GRIP 3V, CCW-702, CCW-702LV or CCW-702WB primer for further information refer to **Spec Supplement G-02-22 'VersiFleece Membrane and Insulation Attachment with Flexible DASH Adhesive'**.

6. It is highly recommended for all deck to wall joints, vertical joints between tilt up panels, and any gaps in metal walls to be sealed to prevent any moisture infiltration and possible condensation beneath the membrane. Unsealed joints must be brought to the attention of the Specifier for assessment and proper detailing.

7. The Specifier must examine structural supports for rooftop equipment to determine if reasonable access to the membrane beneath the equipment is provided.

8. When sleepers are used for mounting rooftop equipment, they must be designed to provide adequate support. An appropriate detail must be selected to prevent depression of the insulation and possible damage to the membrane. Caution is to be exercised for sleeper mounted pipes and gas pipes could shift due to heavier snow accumulation on white roofs, due to lack of solar gain. Designer or Specifier may opt to use structurally secured mounting system or possibly increase sleeper height to reduce the force of sliding snow. Periodic snow removal to reduce accumulation is strongly recommended especially on sleepers running perpendicular to roof slope.

9. Depending on the type of the existing roofing system, the tie in method will vary. Total isolation between the two roofing systems or weep holes may be required to address moisture migration from one roofing system to the other. For PVC membrane total isolation between the two roofing systems is required.

10. Flexible penetrations (braided cables, conduits, wires, etc.) must be enclosed in a stable gooseneck.

11. Hot pipes exceeding the temperatures greater than those included in the “chart” below must be insulated with metal collars and rain hoods. Ensure that rain hood does not fit snug around insulated collars to allow for adequate air circulation and prevent heat transfer.

Hot Pipe Limitations	
Membrane	Temperature
EPDM	180°F
TPO	160°F
PVC	140°F

12. On Mechanically Attached assemblies, additional membrane securement is required around pipes and sealant pockets as shown on applicable details. Fastening plates must be positioned a maximum of 12" away from the penetration, spaced a maximum of 12" on center and flashed in accordance with the applicable Versico Detail.

13. When VersiFleece or an AC membrane is specified, at roof drains and compression seal terminations such as terminations bars and coping stones, the fleece backing must be removed from the back of the membrane so Water Cut-Off Mastic can be applied directly to the membrane surface.

B. **Application of Flexible DASH for Vertical Walls**

1. Flexible DASH must be applied directly to the wall in a spray method out of high pressure dispensing equipment. Bead/splatter methods are not allowed for wall application.

2. Wait for proper string time and apply the VersiFleece membrane to the vertical substrate. Apply pressure to the VersiFleece membrane adhered to the wall with a roller.

C. **Application of CAV-GRIP 3V for Vertical Walls**

1. CAV-GRIP 3V may be used as a contact adhesive to apply VersiFleece TPO/PVC/KEE HP or bareback EPDM/TPO membranes (not for use with bareback PVC or KEE HP) to vertical walls.

2. Application of CAV-GRIP 3V shall be applied continuously with 50 percent overlap on each pass.

D. **Application of CAV-GRIP PVC for Vertical Walls**

1. CAV-GRIP PVC may be used as a contact adhesive to apply VersiFleece TPO/PVC or bareback PVC membranes (not for use with bareback KEE HP) to vertical walls.

2. Application of CAV-GRIP PVC shall be applied continuously with 50 percent overlap on each pass.

E. **Application of Bonding Adhesive**

Use appropriate adhesive for the membrane selected. And when VersiFleece membrane is used for wall flashing refer to VersiFleece Specification for various adhesion methods.

1. Membrane shall be fully adhered to vertical surfaces with appropriate bonding adhesive. The Bonding Adhesive shall be applied continuously, without globs or puddles.

2. After the Bonding Adhesive has properly dried to a tack, roll the membrane into the adhesive and broom into place.

3. When VersiFleece Membrane is selected, the Bonding Adhesive must be applied to the membrane and allowed to flash off fully. Apply a layer of Bonding Adhesive to the vertical wall and second coat of Bonding Adhesive to the VersiFleece Membrane. After the Bonding Adhesive has properly dried, roll the membrane into the adhesive

4. Care must be taken when setting the flashing to avoid bridging greater than 3/4 inch at angle changes (i.e.,

where a parapet or roof penetration meets the roof deck). This can be accomplished by creasing the membrane into the angle change.

5. Terminate the edges of the installed membrane in accordance with Versico's applicable Termination Details.

F. **Roof Drains**

1. Provide a smooth transition from the roof surface to the drain clamping ring. Prepare the substrate around each roof drain to avoid membrane bridging in excess of 2" at the sump area and possible distortion at the drain clamping ring.

2. For drain sumps with slopes greater than 3" in 12":

   a. When reinforced EPDM membrane is specified a separate piece of cured non-reinforced EPDM membrane must be extended into the drain sump as shown on the applicable detail.

   b. When thermoplastic membrane has been specified, a separate piece of appropriate thermoplastic reinforced membrane must be extended into the drain sump as shown on the applicable detail.

3. The mating surfaces between the clamping ring and drain base must be clean and have a smooth finish. When using VersiFleece Membrane, remove fleece along the area of the membrane to placed in the drain bowl and clamping ring.

4. Field splices at roof drains must be located at least 6" outside the drain sump.

5. Cut membrane so it extends approximately 1/2" beyond the attachment points of the clamping ring. The hole in the membrane must not restrict water flow or be smaller than the drain pipe.

6. Remove all existing flashing material to prepare for the membrane seal (application of Water Cut-Off Mastic).

7. All bolts and/or clamps must be in place to provide compression on the Water Cut-Off Mastic.

8. Use drain strainers, which have been approved by the specifier in accordance with applicable codes.

G. **Metal Work**

1. Versico recommends VersiTrim™ Metal Edging/Coping, Termination Bar or Drip Edge for membrane termination. Installation instruction sheets for Versico supplied accessories are available from Versico.

   Note: Refer to Warranty Tables in applicable membrane system specification for metal edge requirements for projects with extended peak gust wind speed coverage greater than 80 miles per hour.

2. When specified, shop fabricated VersiTrim coated metal configured and installed as shown in Thermoplastic Edge Details will achieve ES-1 Compliance.

3. Metal work by others, when specified and approved by Versico, must be fastened to prevent metal from pulling free or buckling and sealed to prevent moisture from entering the roofing system or building. Unless supplied by Versico, metal work securement is not included in this specification and is excluded from the Versico Warranty. Refer to **Design Reference DR-12-18 "Metal Edging"** for applicable standards and **Spec Supplement G-10-18 "Metal Edging"** for recommended design parameters.

4. On retrofit projects, existing counterflashing, edging, expansion joint covers, copings, etc., shall not be reused unless investigated by the specifier to determine its compliance to Versico's current details.

H. **EPDM Flashing Installation Criteria**

1. **General**

a. **Quick Applied Uncured EPDM Flashing** must be limited to the overlayment of vertical seams (as required at angle changes), or to flash inside/outside corners, vent pipes, scuppers and other unusually shaped penetrations where the use of Pre-molded Pipe Seals, cured EPDM membrane or Quick Applied Cured Cover Strip or Overlayment Strip is not practical.

Note: Even when working in warmer temperatures, in most cases a heat gun will be required to elevate the temperature of Quick Applied Uncured EPDM Flashing between 105°F and 110°F (40°C and 43°C) to permit proper forming of the uncured flashing.

b. **Quick Applied Cured Cover Strip or Overlayment Strip** is used to overlay Seam Fastening Plates or metal edging flanges, etc., **Primer** must be used to clean the membrane and metal flanges.

2. **Walls, Parapets, Curbs, Skylights, etc**

a. Continuous deck membrane for wall flashing.

1) When using Quick Applied RTS (Reinforced Termination Strip) secure with proper seam fastening plates and fasteners at a rate of 12-inches on center at the base of the wall. Adhere flashing to Quick Applied RTS and the wall. Terminate the membrane in accordance with the applicable Termination Details.

2) When securing the membrane at the base of the wall with proper seam fastening plates and fasteners through the continuous deck membrane, use minimum 6" wide Quick Applied Cured Cover Strip or Overlayment Strip to overlay fasteners and plates.

3) When using VersiFleece membranes you must use a minimum of 9” of VersiFleece Membrane with fleece side up, at any location that requires membrane securement. VersiFleece Membrane must be fastened at a spacing not to exceed 12” O.C.

b. When the use of continuous deck membrane for wall flashing is not feasible, a separate piece of cured EPDM membrane may be used.

1) When **QA Seam Tape** is used, the **membrane and flashing** (Cured EPDM Flashing) must be cleaned with **Primer**.

c. All vertical field splices at the base of a wall or curb must be overlaid with Quick Applied “T” Joint Covers or a 6" by 6" section (with rounded corners) of VersiGard Quick Applied Uncured EPDM Flashing centered over the field splice.

3. **Other Penetrations**

CAUTION: Projects with warranties greater than 20 years may require additional enhancement and double layer application of flashing. The Versico appropriate flashing detail should be referenced for specific requirements.

a. Flash pipes and round supports with Molded Pipe Seals or Quick Applied Pipe Seals, when feasible, in accordance with the applicable detail.

b. Form Field Fabricated Pipe Seals using Quick Applied Uncured EPDM Flashing around pipes, round supports and structural steel tubing with corner radius greater than 1/4".

c. When flashing seamless metal posts, maximum 4" by 4", with a corner radius less than 1/4", apply a field fabricated pipe flashing with a double vertical wrapping.

d. For pipe clusters or unusually shaped penetrations, a pourable sealer pocket must be utilized.

I. **Thermoplastic Flashing Installation Criteria**

1. **General**

a. Where feasible, Pre-Molded Accessories should be used for corners, pipes, curbs, and sealant pockets. Pre-Fabricated Pourable Sealer Pockets for sealant pockets and Pre-Fabricated Curb Wrap Corners for Curb Corners. Projects with 20 years or greater warranties require the use of pre-molded and/or pre-fabricated accessories unless prohibited by a specific field condition. Refer to **Spec Supplement P-01-22 Related Versico Products**.

b. When the use of Pre-Molded Accessories is not feasible, Non-reinforced thermoplastic membrane can be used for flashing pipe penetrations, sealant pockets and scuppers as well as inside/outside corners.

c. Care must be taken when setting the flashing to avoid bridging greater than 3/4 inch at angle changes (i.e., where a parapet or roof penetration meets the roof deck). This can be accomplished by creasing the membrane into the angle change.

d. For Thermoplastic membranes, when possible, all reinforced membrane splices are heat welded with the Automatic Heat Welder. The Hand Held Hot Air Welder should be utilized in hard to reach areas, smaller curbs, vertical splices and when using non-reinforced membrane.

e. Cut edges of TPO membrane, where scrim reinforcement is exposed, must be sealed with Cut-Edge Sealant (not required on vertical surfaces). Cut edges of PVC membrane are not required to be sealed with Cut-Edge Sealant, however, it is recommended.

f. When flashing walls with PVC membrane, bitumen based roof cement must be removed or concealed with an acceptable underlayment. Bitumen based roof cement and asphaltic-based flashing material, if allowed to remain in contact with a PVC membrane, will cause severe membrane discoloration and promote plasticizer migration.

   CAUTION: Some discoloration of the TPO Membrane may be experienced due to contact with residual asphalt which may have been left in place.

2. **Walls, Parapets, Curbs, Skylights, etc.**

   a. For Thermoplastic membranes, flashing of parapets, curbs, expansion joints and other parts of the roof must the appropriate thermoplastic reinforced membrane.

   b. For Thermoplastic membranes, the flashing height must be calculated so that the membrane flashing includes a minimum 1-1/2 inch heat weld beyond the Fastening Plates.

   c. Fasten at angle change as with the required Versico Fastener and plate.

   d. Flash the fasteners/plates with a separate piece of thermoplastic reinforced membrane; apply heat and crease the flashing into the angle change before attaching it to the vertical surface.

Copyright 2024 Versico

Versico, VersiFleece, Flexible DASH and VersiTrim are Trademarks of Versico

This Spec Supplement represents the applicable information available at the time of its publication. Owners, Specifiers and Versico authorized roofing contractors should consult Versico or their Versico Independent Representative for any information that has subsequently been made available.

Review the appropriate Versico Warranty for specific warranty coverage, terms, conditions and limitations.

SPECIFICATION SUPPLEMENT

G-05-21

Roof Walkway Installation

January 2024

The information contained in this supplement serves as a criteria for Specifiers and Authorized Contractors regarding the design and installation of Versico Roofing Systems and related products. Additional information essential for the design and installation of the Roof Systems mentioned herein are also included in the respective Specification for each Roof System and in the Design Reference Section of the Versico Technical Manual. Specifiers and Authorized Contractors are advised to reference all applicable sections.

A. **Roof Walkways**

Walkways are to be specified at all traffic concentration points (i.e., roof hatches, access doors, rooftop ladders, etc.), and if regular maintenance (once a month or more) is necessary to service rooftop equipment.

1. Walkway types:

   a. **Versico Quick Applied Molded Walkway Pads**: Versico (black or white) molded walkway pads with Factory-Applied QA Seam Tape are used to provide protection for areas of EPDM membrane that are exposed to regular rooftop maintenance.

   CAUTION: Molded Walkway pads not recommended within 10 feet of the perimeter of the roof on ballasted systems to avoid discontinuation of the primary membrane securement (ballast). In lieu of molded walkway pads, concrete pavers can be used when walkway is to be extended into the perimeter area.

   b. **VersiWeld® TPO Heat Weldable Walkway Rolls** are required when walkway pads are to be specified. The Walkway Rolls are heat welded to the VersiWeld membrane using an Automated Heat Welder or Hand-Held Heat Welder. Walkway Rolls are 34 inches wide by 50 feet long and are nominal 170 mils thick. Available in white, gray or tan with safety yellow welding tabs along each edge.

   c. **VersiFlex™ PVC Heat Weldable Walkway Rolls** are required when walkway pads are to be specified. The Walkway Rolls are heat welded to the VersiFlex (PVC/KEE HP) membrane using an Automated Heat Welder or Hand-Held Heat Welder. Walkway Rolls are 36 inches wide by 60 feet long and are nominal 110 mils thick. Available in gray only.

   d. **VersiWeld TPO Crossgrip Walkway Rolls** may be used in lieu of standard VersiWeld TPO Walkway Rolls when a walkway is to be loose-laid and not secured to the membrane. Loose-laid Crossgrip TPO Walkway Rolls are effective for winds up to 55 mph. Rolls are 36” wide by 33’ long, available in white, gray and yellow.

   e. **VersiFlex PVC Crossgrip Walkway Rolls:** Manufactured from PVC and may be used in lieu of standardVersiFlex PVC Walkway Rolls when a walkway is to be loose-laid and not secured to the membrane. Loose-laid Crossgrip PVC Walkway Rolls are effective for winds up to 55 mph. Rolls are 36” wide by 33’ long, available in white, gray and yellow.

   f. **Versico Interlocking Pavers**, 24" X 24" X 2", weighing approximately 6 pounds per square foot, may be specified loose laid directly over the membrane. Installation Instruction sheets are available from Versico.

g. **Smooth concrete pavers**, when specified in conjunction with insulation that is mechanically attached, must be loose laid over a slip sheet of membrane or 2 layers of HP Protective Mat. When insulation is attached with Flexible DASH Adhesive, concrete pavers may be placed over one layer of HP Protective Mat. Pavers cannot weigh more than 100 pounds per paver for ease of removal. For other Applicable Versico Products refer to Technical Data Bulletins for information.

h. **Hanover Prest Plaza Paver –** A pre-cast concrete paver used in conjunction with roof garden applications or for ballasted roof applications. 23-1/2" x 23-1/2" x 2" thick precast concrete pavers weighing 25 psf. Available in a sandstone finish for aesthetic projects and non-slip diamond or stippled finish for ballasted roof projects. Prest pavers are available in 8 standard colors, with special order colors available. The Prest paver can either be installed in conjunction with a separation layer of HP Protective Mat or using Hanover EPDM Pedestals, High-Tab Pedestals, or Elevated Pedestals

i. **Hanover Guardian Paver –** A pedestal paver system designed to meet severe site conditions and high winds, the guardian paver system utilizes a unique three-piece pedestal system and shaped paver which incorporates a top and bottom plate with a bolt connecting the entire paver system together which creates a monolithic surface and provides increased wind performance. The pavers are 23-1/2" x 23-1/2" x 2" or 3" thick. 2" pavers weigh 25 psf and 3" pavers weigh 38 psf. Available in a sandstone finish for aesthetic projects and non-slip diamond or stippled finish for ballasted roof projects. Guardian pavers are available in 8 standard colors, with special order colors available. The Guardian paver can either be installed in conjunction with a separation layer of HP Protective Mat or using Hanover Elevated Pedestals.

j. **Hanover Pedestal Paver -** Used for light traffic areas associated with rooftop or garden roof applications. 23-1/2" x 23-1/2" x 2-1/4" thick precast concrete pavers weighing 22 psf with an elevated clearance of 1/2" from incorporated footing. Available in 8 standard colors, with special order colors available. The pedestal paver can either be installed in conjunction with a separation layer of HP Protective Mat, no pedestals are required

k. **Hanover Ballast and Lightweight Ballast Paver –** The standard, 24" x 24" x 1-13/16" thick, Ballast Paver comes in a natural color and a non-slip Diamond finish and weighs 22 lbs/sq. ft. The Lightweight, 23-1/2" x 23-1/2" x 1-1/4" thick, Ballast Paver comes in a natural color and a non-slip diamond finish and weighs 15 lbs/sq. ft. Both pavers can be used as ballast or walkways.

l. **Sunny Brook Paver –** A pre-cast concrete paver used in conjunction with roof garden applications or for ballasted roof applications. 23-1/2" x 23-1/2" x 2" thick precast concrete pavers weighing 24 psf. Available in 17 standard colors, with special order colors available. The pedestal paver can either be installed in conjunction with a separation layer of HP Protective Mat or using MRP Pedestal and shims.

m. **MRP Pedestals -** Designed to support concrete pavers, a pedestal system with a self-leveling head and adjustment key which can modify the height of the pedestal from the top with a special tool. 100% recyclable and a loading capacity of each support is more than 2,205 lbs and the supporting base is 49.6 sq. in.

2. Pavers are not recommended for use as walkways on projects where the roof slope exceeds 2 inches per horizontal foot.

3. Walkways are considered a maintenance item and are excluded from the Versico warranty.

4. Window washing equipment will require special maintenance. Runways or window washing tracks must be utilized to prevent damage to membrane or insulation. Such details must be reviewed by Versico to determine reasonable access to the membrane and associated insulation/underlayment components.

NOTE: Pavers are not recommended for use as walkways where slippery conditions may be encountered. Paver slippage may occur due to the lower membrane surface temperature and the presence of frost or ice.

B. **Walkway Installation**

1. Install walkways in those locations as designated by the specifier.

2. VersiGard Quick Applied Molded Walkway Pads

   a. Use Weathered Membrane Cleaner to remove dirt or other contaminants from the area.

   b. Adhere Walkway Pads using Versico EPDM Primer. Apply primer to deck surface where tape will contact deck surface.

   c. Allow a 1” wide break between Walkway Pads. Discontinue Walkways over field splices allowing a minimum 1” space.

3. VersiWeld/VersiFlex Heat Weldable Walkway Rolls

   a. Use Weathered Membrane Cleaner (TPO) or PVC and KEE HP Membrane Cleaner (PVC) to remove dirt or other contaminants from the area to be welded to the walkway material.

   b. Position the walkway material and cut the Walkway Rolls into maximum 10' lengths (when positioned parallel to field splices) and position with a minimum 1" gap between adjacent pieces to allow for water drainage. When walkways are to be installed perpendicular to field splices, adjust walkway length to provide a 4" - 6" minimum gap at field splices. (Because the attachment of the walkway to the membrane is permanent, this will allow access to the field seams).

   c. Using an Automatic Heat Welder, weld all 4 sides of the walkway material to the membrane. (Typically the same speed and temperature settings will be used for this procedure as for welding membrane to membrane. A test weld is always recommended prior to performing welds to the installed membrane). A hand held welder may be utilized however, productivity will be decreased.

      If, possible, allow the walkway to warm by the sun prior to welding so distortion will not occur due to expansion.

4. VersiWeld TPO or VersiFlex PVC Crossgrip Walkway Rolls

   a. Loose-lay Crossgrip in areas of high traffic or around mechanical units that might require servicing.

5. Concrete Paver Blocks

   a. Install a slip-sheet of roofing membrane under all concrete pavers for the protection of the deck membrane. The protective layer must extend a minimum of 2" on each side of the walkway.

6. Versico Interlocking Rubber Pavers

   a. Rubber Pavers can be loose laid directly over the membrane.

   NOTE: Pavers are not recommended for walkways when slopes exceed 2" per horizontal foot. Slippage could be encountered during colder seasons.

Copyright 2024 Versico

Versico, VersiGard, VersiWeld and VersiFlex are Trademarks of Versico

This Design Reference represents the applicable information available at the time of its publication. Owners, specifiers and Versico authorized roofing Contractors should consult Versico or their Versico Independent Sales Representative for any information that has subsequently been made available.

Review the appropriate Versico Warranty for specific warranty coverage, terms, conditions and limitations.

SPECIFICATION
SUPPLEMENT

G-06-20

Daily Seal & Clean Up

January 2024

The information contained in this supplement serves as a criteria for Specifiers and Authorized Contractors regarding the design and installation of Versico Roofing Systems and related products. Additional information essential for the design and installation of the Roof Systems mentioned herein are also included in the respective Specification for each Roof System and in the Design Reference Section of the Versico Technical Manual. Specifiers and Authorized Contractors are advised to reference all applicable sections.

A. **Daily Seal**

1. On phased roofing, when the completion of flashings and terminations is not possible by the end of each workday, provisions must be taken to temporarily close the membrane to prevent water infiltration.

2. Temporarily seal any loose membrane edge down slope using VersiGard Two Part Pourable Sealer (EPDM only), Flexible DASH Adhesive, VapAir Seal Flashing Foam, hot asphalt, or a similar product so that the membrane edge will not buck water. Caution must be exercised to ensure positive draining during installation, temporary seal locations should be designated so that drainage is not restricted during construction by partially installed roof sections.

   a. When applying Flexible DASH Adhesive or other sprayed urethane foam, prime the surface of the membrane with Versico Primer to ensure proper adhesion

   b. Versico Pourable Sealer, when utilized, shall be applied as follows:

      1) The two Pourable Sealer components must be mixed in accordance with the instructions on the container labels.

      2) Apply the Pourable Sealer along the loose edge of the EPDM membrane. If necessary, use a trowel to spread Pourable Sealer to achieve complete coverage.

3. When tie-in to existing built-up roofs, remove the gravel. The surface must be clean and dry.

4. After embedding membrane in daily seal material, CHECK FOR CONTINUOUS CONTACT. Provide continuous pressure over the length of the temporary seal with 15' lengths of 2-1/2" diameter Versico Lay Flat Tubing filled with dry sand. Provide weight evenly distributed along the length of the daily seal to reduce the wind effect on the continuous temporary seal.

   Note: The use of rigid wood nailers is not recommended due to warping. Constant compression cannot be achieved on an uneven substrate.

5. When work is resumed, pull the imbedded membrane free; trim and remove daily seal material from membrane before continuing installation of adjoining sections.

VERSICO
ROOFING SYSTEMS

B. **Clean Up**

1. If required by the specifier to ensure the aesthetics of the surface of the membrane, hand prints, footprints, general traffic grime, industrial pollutants and environmental dirt may be cleaned from the surface of the membrane by scrubbing with soapy (non-abrasive soap) water and rinsing the area completely with clean water.

    a. For VersiGard (black or white) or VersiWeld membrane, Weathered Membrane Cleaner can be used to clean the surface of the membrane.

    b. For VersiFlex Membrane, PVC Membrane Cleaner can be used to clean the surface of the membrane.

2. Bonding Adhesive and Flexible DASH Adhesive and VapAir Flashing Foam residue may be cleaned by using the following procedures:

    a. Saturate a clean HP Splice Wipe with Weathered Membrane Cleaner (EPDM and TPO) or PVC and KEE HP Membrane Cleaner (PVC).

    b. Scrub exposed adhesive with the saturated HP Splice Wipe until all residue is removed from the membrane. For easier removal, it may be necessary to change Splice Wipes frequently.

Copyright 2024 Versico

Versico, VersiGard, VersiWeld, VersiFlex and VersiFleece are Trademarks of Versico

This Spec Supplement represents the applicable information available at the time of its publication. Owners, Specifiers and Versico authorized roofing contractors should consult Versico or their Versico Independent Sales Representative for any information that has subsequently been made available.

Review the appropriate Versico Warranty for specific warranty coverage, terms, conditions and limitations.

SPECIFICATION
SUPPLEMENT

G-07-20

Application Procedures for Versico VapAir Seal 725TR Air and Vapor Barrier

January 2024

The information contained in this supplement serves as a criteria for Specifiers and Authorized Contractors regarding the design and installation of Versico Roofing Systems and related products. Additional information essential for the design and installation of the Roof Systems mentioned herein are also included in the respective Specification for each Roof System and in the Design Reference Section of the Versico Technical Manual. Specifiers and Authorized Contractors are advised to reference all applicable sections.

A. General

1. **Versico's VapAir Seal 725TR Air and Vapor Barrier** A 40-mil thick composite consisting of 35-mil self-adhering rubberized asphalt membrane laminated to an 5-mil UV resistant poly film with an anti-skid surface which is fully compatible with Flexible DASH Adhesive. VapAir Seal 725TR can also function as a temporary roof for up to 120 days. Available in rolls 39" wide by 100' long (325 square feet).

2. **CAV-GRIP 3V Low-VOC Adhesive/Primer:** a low-VOC, methylene chloride-free adhesive that can be used for a variety of applications including: enhancing the bond between Versico's VapAir Seal 725TR and various substrates. Coverage rate is approximately 2,000-2,500 sq. ft. per 40 lb cylinder and 4,000-5,000 sq. ft. per 85 lb cylinder as a primer, in a single-sided application.

3. **CCW-702 Primer and 702LV Primer (Low-VOC)** - A single component, solvent based, high-tack primer used to provide maximum adhesion between Versico 725TR Air and Vapor Barrier and an approved substrate. Applied by spray or long nap roller with a coverage rating ranging from approximately 300 to 350 square feet per gallon on smooth finishes (i.e., concrete) to 75 square feet per gallon on porous surfaces (i.e., Dens-Deck Prime gypsum board). Available in 5-gallon containers. CCW 702LV Primer contains less than 250g/L VOCs and meets South Coast Air Quality Management District (SCAQMD) and Leadership in Energy and Environmental Design (LEED) Requirements for Volatile Organic Compounds.

4. **CCW-702WB –** a high-tack, water-based contact adhesive for promoting adhesion of Versico air/vapor barrier membranes and an approved substrate (i.e., concrete, Dens-Deck Prime and Securock). Applied by roller, brush or spray with an application rate of approximately 200 sq. ft. per gallon. Available in 5-gallon containers. CCW-702WB Primer contains 57g/L VOCs and meets South Coast Air Quality Management District (SCAQMD) and Leadership in Energy and Environmental Design (LEED) Requirements for Volatile Organic Compounds.

B. Approved Substrates

Versico VapAir Seal 725TR Air and Vapor Barrier, in conjunction with either Versico's CAV-GRIP 3V, CCW-702, CCW-702LV or CCW-702WB Primers, can be used over structural concrete, gypsum and wood decks. In addition, Securock/DensDeck Prime (typically used over steel deck construction) is a suitable substrate providing it is mechanically attached to the deck at the minimum rate of 1 per 2 per square foot or adhered to the deck with Flexible DASH Adhesive per Versico Specifications.

CAUTION: Use of standard DensDeck is not recommended due to excessive primer absorption. When the use of standard DensDeck is specified, two coats of CCW Primer will be required along with a trial test to verify adequate adhesion of the Versico VapAir Seal 725TR Air and Vapor Barrier.

C. Limitations

VERSICO
ROOFING SYSTEMS

1. Do not apply primer or vapor barrier to frozen substrates. Best results are obtained when temperature is above 40°F (4°C).

2. Do not apply primer or vapor barrier to damp or contaminated surfaces.

3. Versico VapAir Seal 725TR Air and Vapor Barrier is not recommended for use over sealants containing coal tar or polysulfides. If these materials are present, they must be removed and the surfaces thoroughly cleaned.

D. **Installation**

1. **Surface Preparation**: The surface shall be dry, have a smooth finish and be free of voids, spalled areas, sharp protrusions, loose aggregate, latence and form release agents. In the event of rain, concrete must be allowed to dry before primer is applied.

2. **Primer**: Surfaces to receive Versico's VapAir Seal 725TR Air and Vapor Barrier must be clean and dry. Prime with Versico's CAV-GRIP 3V, CCW-702, CCW-702LV or CCW-702WB Primer. Apply Primer by spray, brush or with a long nap roller at the applicable coverage rate noted above. At 75° F allow CCW-702 or 702LV primer to dry 75 minutes minimum or allow CAV-GRIP 3V to dry for approximately 5 minutes. Primer has a satisfactory cure when it will not transfer when touched. Prime only areas to be waterproofed the same day. Re-prime if area becomes dirty.

3. **Application**: Apply Versico VapAir Seal 725TR Air and Vapor Barrier from low to high point, in a shingle fashion, so that laps will shed water. Overlap all edges at least 2". End laps shall be staggered. Seams and end laps must be rolled with a 2" seam roller. Place membrane carefully to avoid wrinkles and fishmouths. Immediately after installation, roll with a 30" wide, 150 pound weighted segmented steel roller.

4. **Repairs**: Following application, inspect VapAir Seal 725TR membrane for tears, punctures, fishmouths, air bubbles and voids due to misalignment at seams. Remove damaged membrane. Prime exposed substrate and allow primer to dry. Apply a new section of Versico VapAir Seal 725TR Air and Vapor Barrier to primed substrate, extending onto adhered membrane 6" on all sides. Firmly press air and vapor barrier repair section to ensure a good seal. Slit fishmouths and overlap the edges. Place a section of Versico's VapAir Seal 725TR over the repair and extend 6" in all directions. Firmly press repair section to ensure a good seal.

5. **Insulation and VersiFleece Membrane Installation**: Ensure surface of Versico's VapAir Seal 725TR Air and Vapor Barrier is dry prior to installing insulation. Place insulation over the surface and mechanically attach to the roof deck or adhere to the vapor barrier with Flexible DASH Adhesive in accordance with this Versico Specification. Complete the installation by adhering VersiFleece membrane over the insulation.

6. **Installation at angle changes**: For VersiFleece Systems where insulation is adhered to the vapor retarder and adhered roofing systems with vertical base wall securement and adhered insulation, one of the following options must be incorporated to ensure continuous seal is provided during climatic changes, especially in northern regions:

   a. Option One: Mechanically secure the first course of insulation (bottom layer) with insulation fasteners and plates. A row of fasteners shall be installed within 6" of the angle change spaced 12" O.C.

   b. Option Two: In lieu of fastening, install a 3" diameter backer rod along the angle change to accommodate for movement and prevent the effect of the vapor retarder pulling away from angle change.

      Note: Maintain mylar backing at the sponge tubing to prevent the VapAir Seal 725TR from adhering to the tubing. As shown in the applicable Versico Detail.

   c. Option Three: In lieu of fastening and when the use of backer rod is not possible, the VapAir Seal 725TR can be installed with a double fold, allowing extra material to accommodate for structural movement.

      Note: Maintain mylar backing within the fold to allow for material expansion in the event of movement. Refer to applicable Versico Detail.

725TR AIR AND VAPOR BARRIER

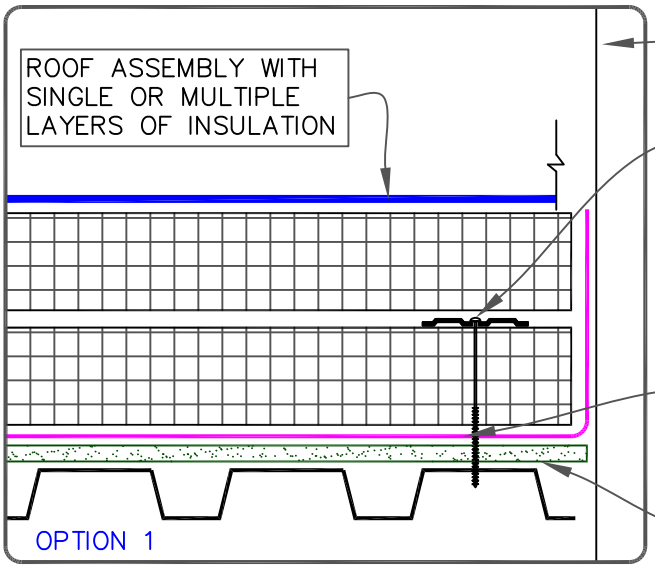

PARAPET WALL/LOW CURB

SECURE BOTTOM LAYER OF INSULATION AT 12" (305mm) O.C. PARALLEL TO WALL AT 6" (152mm) DISTANCE NOTE: WHEN MEMBRANE BASE SECUREMENT IS PROVIDED INTO THE DECK, INSULATION FASTENER MAY BE ELIMINATED

725TR SELF-ADHERING VAPOR RETARDER FULLY ADHERED TO PRIMED SUBSTRATE

SUBSTRATE BOARD

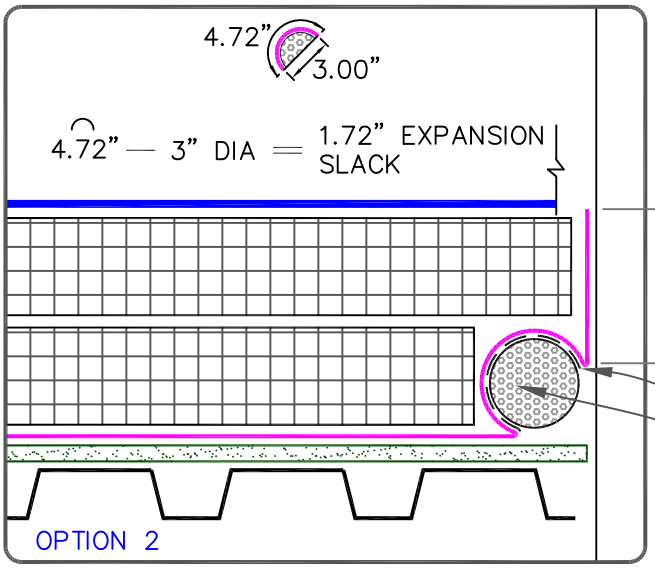

DIMENSIONS		mm	
A	3"	76	MIN.

MYLAR SHEET (DASH LINE) AS BOND BREAKER

CONTINUOUS OPEN CELL POLYURETHANE FOAM BACKER ROD

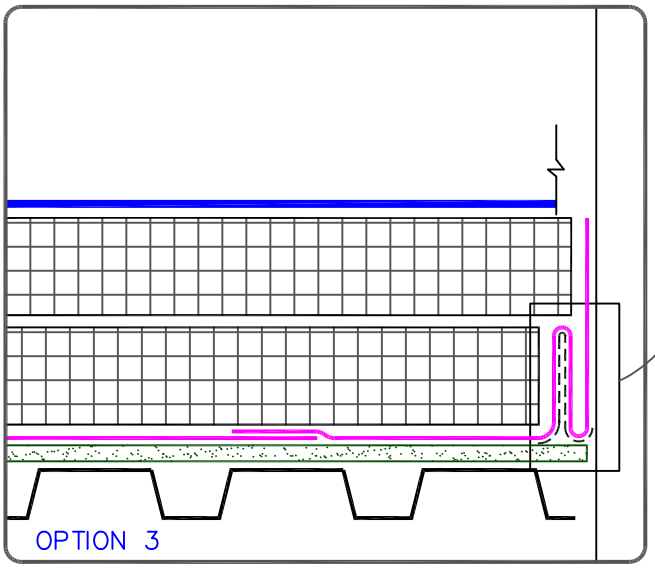

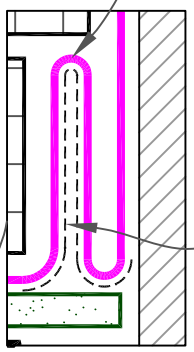

CONTINUOUS STRIPPING OF SELF-ADHERING VAPOR RETARDER 725TR FULLY ADHERED TO WALL AND SUBSTRATE WITH DOUBLE FOLD CREASES MIN. 2" (51mm) HIGH, SET VERTICALLY UP AGAINST THE WALL. DO NOT ADHERE THE FOLDS TOGETHER

MYLAR SHEET (DASH LINE) AS BOND BREAKER

VERSICO ROOFING SYSTEMS

© 2024 VERSICO

DECK-TO-WALL VAPOR RETARDER EXPANSION DETAIL

→ MEMBRANE

→ APPROVED SUBSTRATE

0 → SEE NOTE(S)

SPEC. SUPPLEMENT

G-07

Copyright 2024 Versico

Versico and VersiFleece are Trademarks of Versico

Dens Deck is a Trademark of Georgia-Pacific Gypsum LLC

Securock is a Trademark of USG Corporation

This Spec Supplement represents the applicable information available at the time of its publication. Owners, Specifiers and Versico authorized roofing Contractors should consult Versico or their Versico Independent Sales Representative for any information that has subsequently been made available.

Review the appropriate Versico Warranty for specific warranty coverage, terms, conditions and limitations.

SPECIFICATION
SUPPLEMENT

G-08-23

Insulation Attachment and Details

January 2024

The information contained in this supplement serves as a criteria for Specifiers and Authorized Contractors regarding the design and installation of Versico Roofing Systems and related products. Additional information essential for the design and installation of the Roof Systems mentioned herein are also included in the respective Specification for each Roof System and in the Design Reference Section of the Versico Technical Manual. Specifiers and Authorized Contractors are advised to reference all applicable sections.

TABLE OF CONTENTS

Adhered Systems	**Detail**
Insulation / Cover Board Attachment	A-27.1
Minimum 2” Thick Versico MP-H/ Securshield Polyisocyanurate Insulation	A-27.2
Minimum 1-1/2” Thick Versico MP-H / Securshield Polyisocyanurate Insulation	A-27.3
1/4” Or 1/2" Thick Securock Or DensDeck/DensDeck Prime	A-27.4
5/8” Thick Securock, DensDeck/DensDeck Prime or DenDeck StormX Prime	A-27.5
Versico Durafacer (OSB/Polyisocyanurate Composite)	A-27.6
Insulation / Cover Board Attachment Using Bead Adhesive	A-27.7

Mechanically Attached Systems	**Detail**
Insulation / Cover Board Attachment For **ALL** Warranty Durations	MA-27
R-Tech Fanfold Roof Underlayment	MA-27.3
R-Tech Fanfold Roof Underlayment For FM Assemblies	MA-27.4
Insulation/Cover Board Attachment When Using SecurShield Family Products For All Warranties Lengths	MA-27.5

VERSICO
ROOFING SYSTEMS

ATTACHMENT DETAILS — INSULATION / COVER BOARD

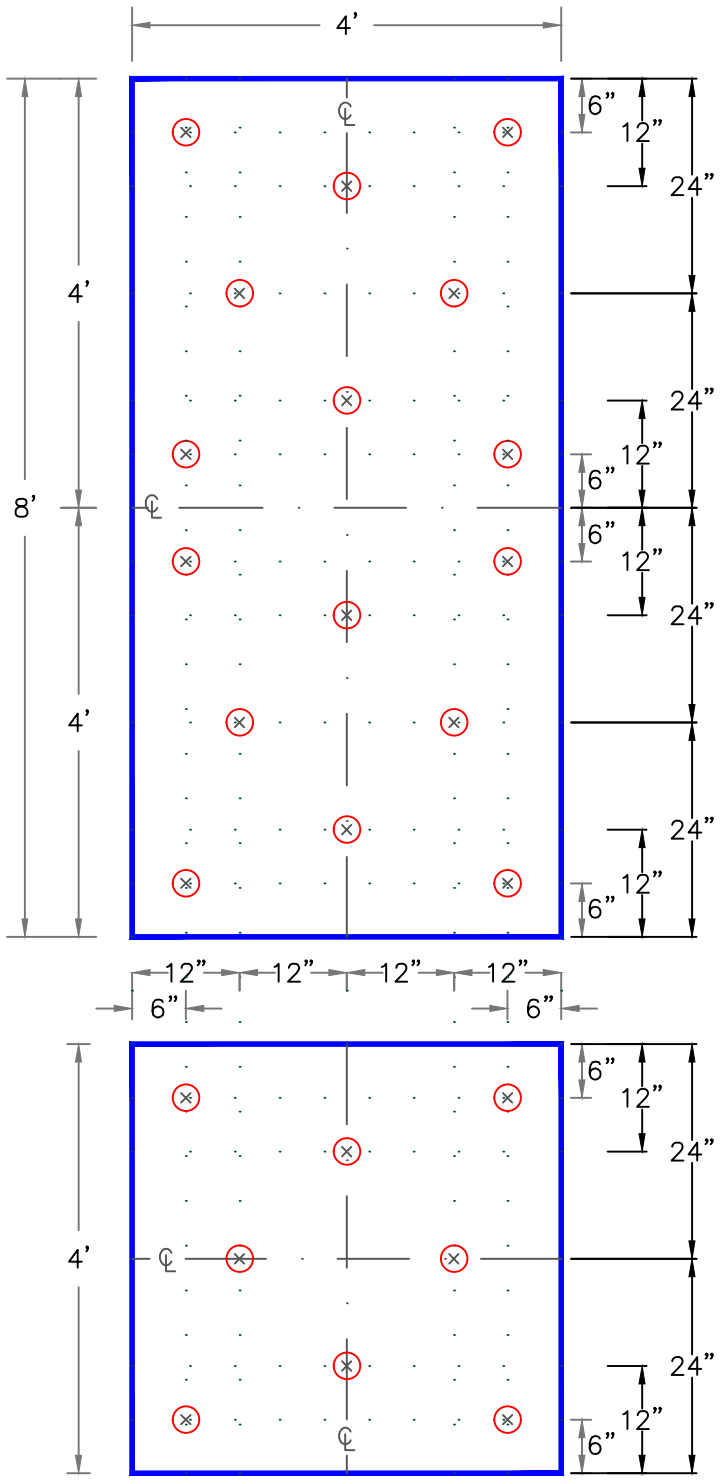

NOTES:

1. WHEN ENHANCED INSULATION FASTENING IS REQUIRED AS PRESCRIBED IN FACTORY MUTUAL LOSS PREVENTION DATA SHEET 1–29, ANSI/SPRI WD–1, OR MIAMI–DADE COUNTY, REFER TO VERSICO'S DESIGN REFERENCE DR–05–18.
2. FOR CRITERIA ON INSULATION FASTENERS AND PLATES, REFER TO VERSICO SPECIFICATIONS.
3. IF A WIND SPEED WARRANTY GREATER THAN 55 MPH (25 METERS PER SECOND) OR A WARRANTY TERM GREATER THAN 20–YEARS IS SPECIFIED, ADDITIONAL FASTENING MAY BE REQUIRED, REFER TO VERSICO SPECIFICATIONS.

FEET TO CENTIMETERS	
4'	8'
122	244

	INCHES TO CENTIMETERS																
inch	1/4"	1/2"	3/4"	1"	1.5"	2"	2.5"	3"	4"	5"	6"	7"	8"	9"	10"	11"	12"
cm	1	1.5	2	2.5	4	5	6.5	7.5	10	13	15	18	20	23	25	28	30

VERSICO ROOFING SYSTEMS

© 2024 VERSICO

VERSICO INSULATION / COVERBOARD ATTACHMENT

→ FASTENER & PLATE
→ CENTER LINE
→ GUIDE LINE

ADHERED SYSTEM

A – 27.1

ATTACHMENT DETAILS — INSULATION BOARD

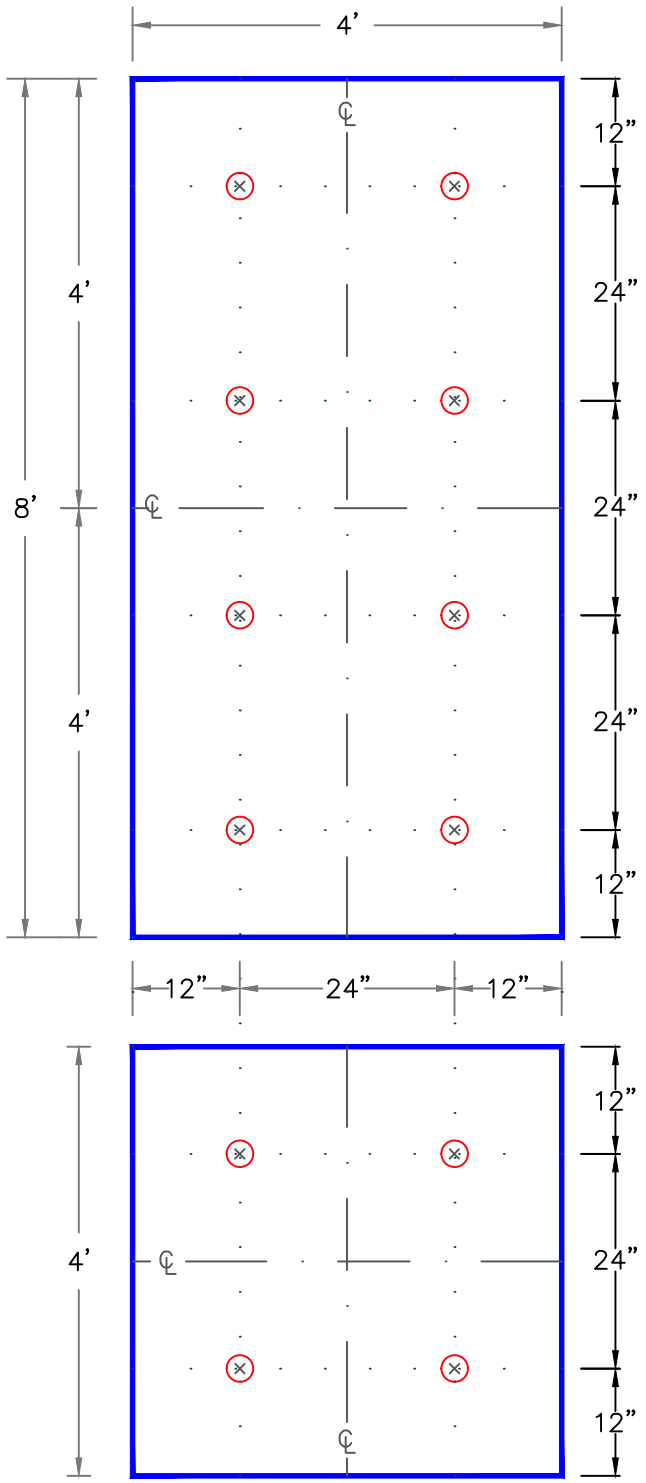

NOTES:

1. THIS DETAIL APPLIES TO MIN. 2" (51mm) THICK (SINGLE OR TOP LAYER) VERSICO POLYISOCYANURATE INSULATION WHEN FASTENED INTO 22-GAUGE STEEL, STRUCTURAL CONCRETE, MINIMUM 15/32" (12mm) PLYWOOD OR 1-1/2" (38mm) THICK WOOD PLANK ROOF DECKS.

2. WHEN ENHANCED INSULATION FASTENING IS REQUIRED AS PRESCRIBED IN FACTORY MUTUAL LOSS PREVENTION DATA SHEET 1-29, ANSI/SPRI WD-1 OR MIAMI-DADE COUNTY, REFER TO VERSICO'S DESIGN REFERENCE DR-05-18.

3. FOR CRITERIA ON INSULATION FASTENERS AND PLATES, REFER TO VERSICO SPECIFICATIONS.

4. IF A WIND SPEED WARRANTY GREATER THAN 55 MILES PER HOUR (25 METERS PER SECOND) OR A WARRANTY TERM GREATER THAN 20-YEARS IS SPECIFIED OR FOR SYSTEMS OVER 50'(15METERS), ADDITIONAL FASTENING MAY BE REQUIRED, REFER TO VERSICO SPECIFICATIONS.

5. DETAIL NOT FOR USE OVER ORIENTED STRAND BOARD, GYPSUM, FIBROUS CEMENT (TECTUM), LIGHTWEIGHT INSULATING CONCRETE OR STEEL ROOF DECK THINNER THAN 22-GAUGE (0.8mm), REFER TO DETAIL A-27.1 FOR ACCEPTABLE FASTENING.

FEET TO CENTIIMETERS	
4'	8'
122	244

	INCHES TO CENTIMETERS																
inch	1/4"	1/2"	3/4"	1"	1.5"	2"	2.5"	3"	4"	5"	6"	7"	8"	9"	10"	11"	12"
cm	1	1.5	2	2.5	4	5	6.5	7.5	10	13	15	18	20	23	25	28	30

VERSICO ROOFING SYSTEMS

© 2024 VERSICO

MINIMUM 2" THICK VERSICO MP-H/VERSICORE/ SECURSHIELD POLYISOCYANURATE INSULATION

FASTENER & PLATE

CENTER LINE

GUIDE LINE

ADHERED SYSTEM

A-27.2

ATTACHMENT DETAILS — INSULATION BOARD

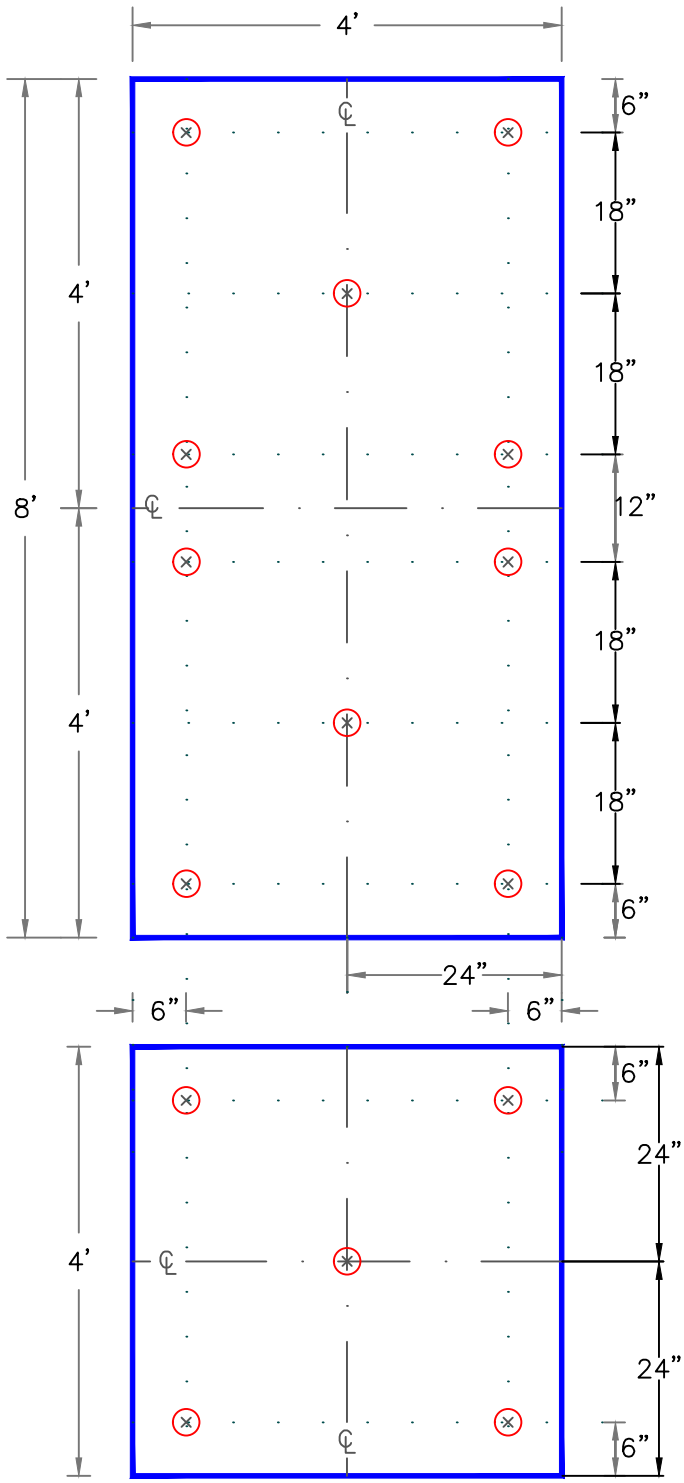

NOTES:

1. THIS DETAIL APPLIES TO MIN. 1–1/2" (38mm) THICK (SINGLE OR TOP LAYER) VERSICO POLYISOCYANURATE INSULATION WHEN FASTENED INTO 22–GAUGE STEEL, STRUCTURAL CONCRETE, MINIMUM 15/32" (12mm) PLYWOOD OR 1–1/2" (38mm) THICK WOOD PLANK ROOF DECKS.

2. WHEN ENHANCED INSULATION FASTENING IS REQUIRED AS PRESCRIBED IN FACTORY MUTUAL LOSS PREVENTION DATA SHEET 1–29, ANSI/SPRI WD–1 OR MIAMI–DADE COUNTY, REFER TO VERSICO'S DESIGN REFERENCE DR–05–18.

3. FOR CRITERIA ON INSULATION FASTENERS AND PLATES, REFER TO VERSICO SPECIFICATIONS.

4. IF A WIND SPEED WARRANTY GREATER THAN 55 MILES PER HOUR (25 METERS PER SECOND) OR A WARRANTY TERM GREATER THAN 20–YEARS IS SPECIFIED OR FOR SYSTEMS OVER 50'(15METERS), ADDITIONAL FASTENING MAY BE REQUIRED, REFER TO VERSICO SPECIFICATIONS.

5. THIS DETAIL NOT FOR USE OVER ORIENTED STRAND BOARD, GYPSUM, FIBROUS CEMENT (TECTUM), LIGHTWEIGHT INSULATING CONCRETE OR STEEL ROOF DECK THINNER THAN 22–GAUGE (0.8mm), REFER TO DETAIL A–27.1 FOR ACCEPTABLE FASTENING.

FEET TO CENTIIMETERS	
4'	8'
122	244

	INCHES TO CENTIMETERS																
inch	1/4"	1/2"	3/4"	1"	1.5"	2"	2.5"	3"	4"	5"	6"	7"	8"	9"	10"	11"	12"
cm	1	1.5	2	2.5	4	5	6.5	7.5	10	13	15	18	20	23	25	28	30

VERSICO ROOFING SYSTEMS
© 2024 VERSICO

MINIMUM 1–1/2" THICK VERSICO MP–H/VERSICORE/SECURSHIELD POLYISOCYANURATE INSULATION

FASTENER & PLATE
CENTER LINE
GUIDE LINE

ADHERED SYSTEM

A–27.3

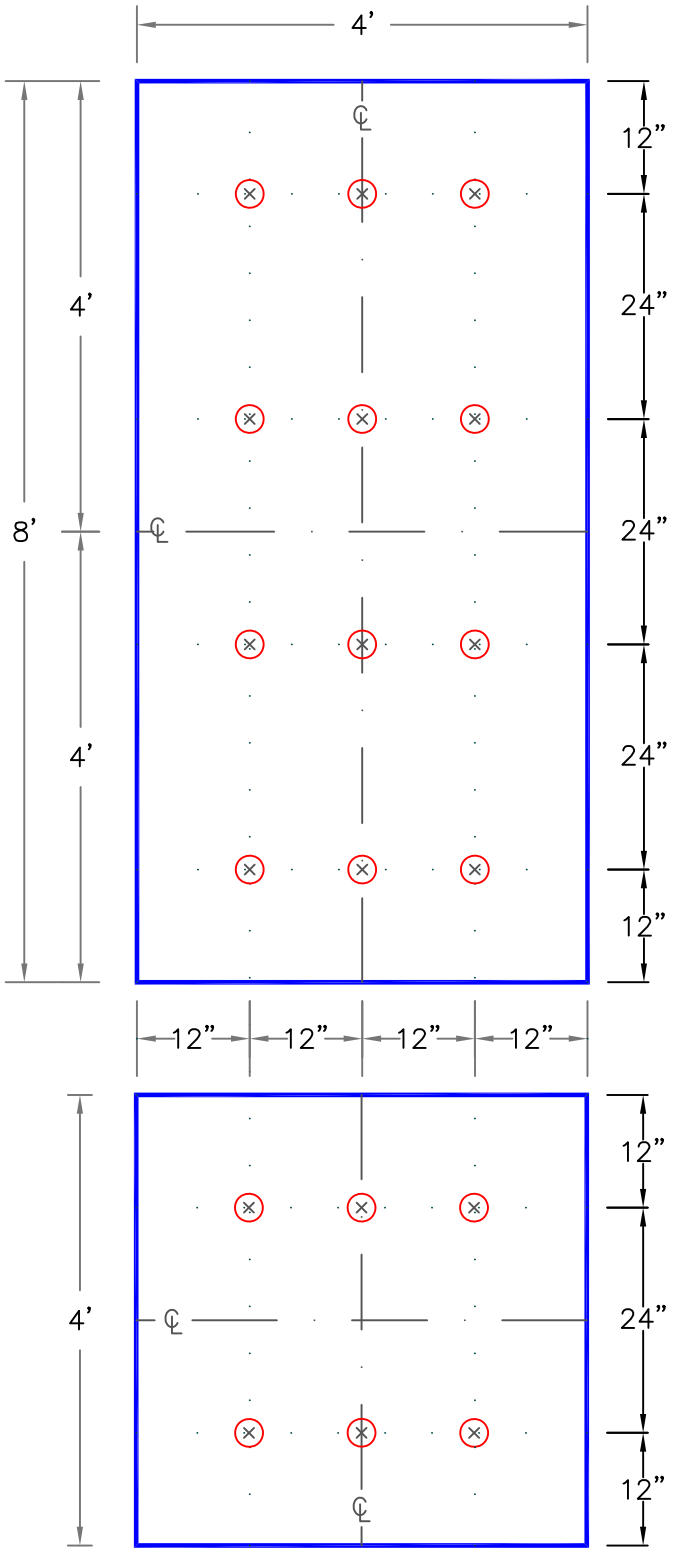

NOTES:

1. THIS DETAIL APPLIES TO 1/4" (6.4mm) AND 1/2" (13mm) THICK SECUROCK OR DENS DECK PRIME (OVER AN APPROVED INSULATION) WHEN FASTENED INTO 22-GAUGE (0.8mm) STEEL, STRUCTURAL CONCRETE, MINIMUM 15/32" (12mm) PLYWOOD OR 1-1/2" THICK WOOD PLANK ROOF DECKS.

2. WHEN ENHANCED FASTENING IS REQUIRED AS PRESCRIBED IN FACTORY MUTUAL LOSS PREVENTION DATA SHEET 1-29, ANSI/SPRI WD-1 OR MIAMI-DADE COUNTY, REFER TO VERSICO'S DESIGN REFERENCE DR-05-18.

3. FOR CRITERIA ON INSULATION FASTENERS AND PLATES, REFER TO VERSICO SPECIFICATIONS.

4. IF A WIND SPEED WARRANTY GREATER THAN 55 MILES PER HOUR (25 METERS PER SECOND) OR A WARRANTY TERM GREATER THAN 20-YEARS IS SPECIFIED OR FOR SYSTEMS OVER 50'(15METERS), ADDITIONAL FASTENING MAY BE REQUIRED, REFER TO VERSICO SPECIFICATIONS.

5. DETAIL NOT FOR USE OVER ORIENTED STRAND BOARD, GYPSUM, FIBROUS CEMENT (TECTUM), LIGHTWEIGHT INSULATING CONCRETE OR STEEL ROOF DECK LESS THAN 22-GAUGE (0.8mm), REFER TO DETAIL A-27.1 FOR ACCEPTABLE FASTENING.

6. WHEN INSTALLED OVER COMBUSTIBLE WOOD DECKS OR INSULATIONS, ALL JOINTS SHALL BE STAGGERED.

7. LONG UNINTERRUPTED RUNS >200' (>61M) OF SECUROCK MAY REQUIRE SLIGHT GAPPING DUE TO THERMAL EXPANSION.

FEET TO CENTIIMETERS	
4'	8'
122	244

	INCHES TO CENTIMETERS																
inch	1/4"	1/2"	3/4"	1"	1.5"	2"	2.5"	3"	4"	5"	6"	7"	8"	9"	10"	11"	12"
cm	1	1.5	2	2.5	4	5	6.5	7.5	10	13	15	18	20	23	25	28	30

VERSICO ROOFING SYSTEMS
© 2024 VERSICO

1/4" OR 1/2" THICK SECUROCK OR DENS DECK/DENS DECK PRIME

⊗ → FASTENER & PLATE
℄ → CENTER LINE
· · · · → GUIDE LINE

ADHERED SYSTEM

A-27.4

ATTACHMENT DETAILS — COVER BOARD

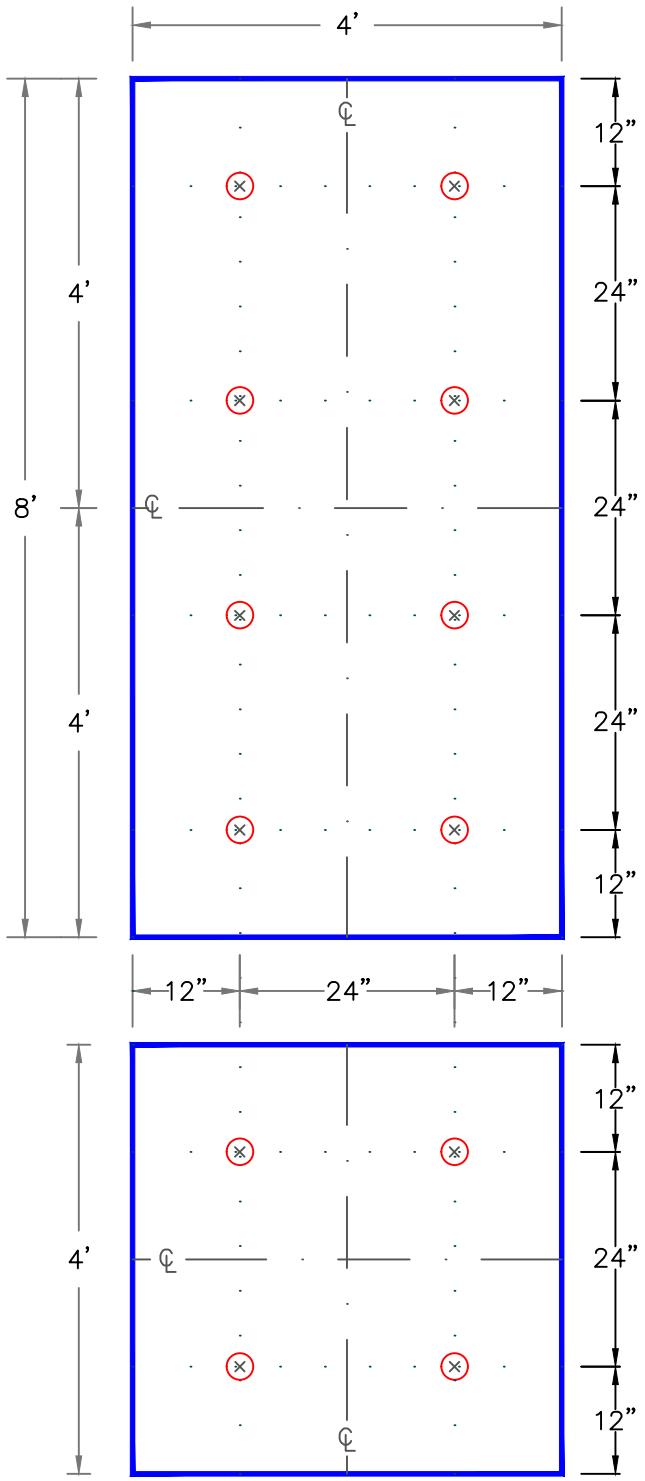

NOTES:

1. THIS DETAIL APPLIES TO 5/8" (16mm) THICK SECUROCK, DENS DECK PRIME, DENS DECK STORMX PRIME OR DURAFACER POLYISO (OVER AN APPROVED INSULATION) WHEN FASTENED INTO 22-GAUGE STEEL, STRUCTURAL CONCRETE, MINIMUM 15/32" (12mm) PLYWOOD OR 1-1/2" (38mm) THICK WOOD PLANK ROOF DECKS.
2. WHEN ENHANCED FASTENING IS REQUIRED AS PRESCRIBED IN FACTORY MUTUAL LOSS PREVENTION DATA SHEET 1-29, ANSI/SPRI WD-1 OR MIAMI-DADE COUNTY, REFER TO VERSICO'S DESIGN REFERENCE DR-05-18.
3. FOR CRITERIA ON INSULATION FASTENERS AND PLATES, REFER TO VERSICO SPECIFICATIONS.
4. IF A WIND SPEED WARRANTY GREATER THAN 55 MILES PER HOUR (25 METERS PER SECOND) OR A WARRANTY TERM GREATER THAN 20-YEARS IS SPECIFIED OR FOR SYSTEMS OVER 50'(15METERS), ADDITIONAL FASTENING MAY BE REQUIRED, REFER TO VERSICO SPECIFICATIONS.
5. DETAIL NOT FOR USE OVER ORIENTED STRAND BOARD, GYPSUM, FIBROUS CEMENT (TECTUM), LIGHTWEIGHT INSULATING CONCRETE OR STEEL ROOF DECK LESS THAN 22-GAUGE (0.8mm), REFER TO DETAIL A-27.1 FOR ACCEPTABLE FASTENING.
6. WHEN INSTALLED OVER COMBUSTIBLE WOOD DECKS OR INSULATIONS, ALL JOINTS SHALL BE STAGGERED.
7. LONG UNINTERRUPTED RUNS >200' (>61M) OF SECUROCK MAY REQUIRE SLIGHT GAPPING DUE TO THERMAL EXPANSION.
8. DURAFACER POLYISO ACHIEVES UP TO A 20-YEAR, 90-MPH WARRANTY WITH (8) FASTENERS.

FEET TO CENTIIMETERS	
4'	8'
122	244

	INCHES TO CENTIMETERS																
inch	1/4"	1/2"	3/4"	1"	1.5"	2"	2.5"	3"	4"	5"	6"	7"	8"	9"	10"	11"	12"
cm	1	1.5	2	2.5	4	5	6.5	7.5	10	13	15	18	20	23	25	28	30

VERSICO ROOFING SYSTEMS
© 2024 VERSICO

5/8" THICK SECUROCK OR DENS DECK/DENS DECK PRIME/DENS DECK STORMX PRIME

⊗ → FASTENER & PLATE
℄ → CENTER LINE
· · · · → GUIDE LINE

ADHERED SYSTEM

A-27.5

ATTACHMENT DETAILS — COVER BOARD

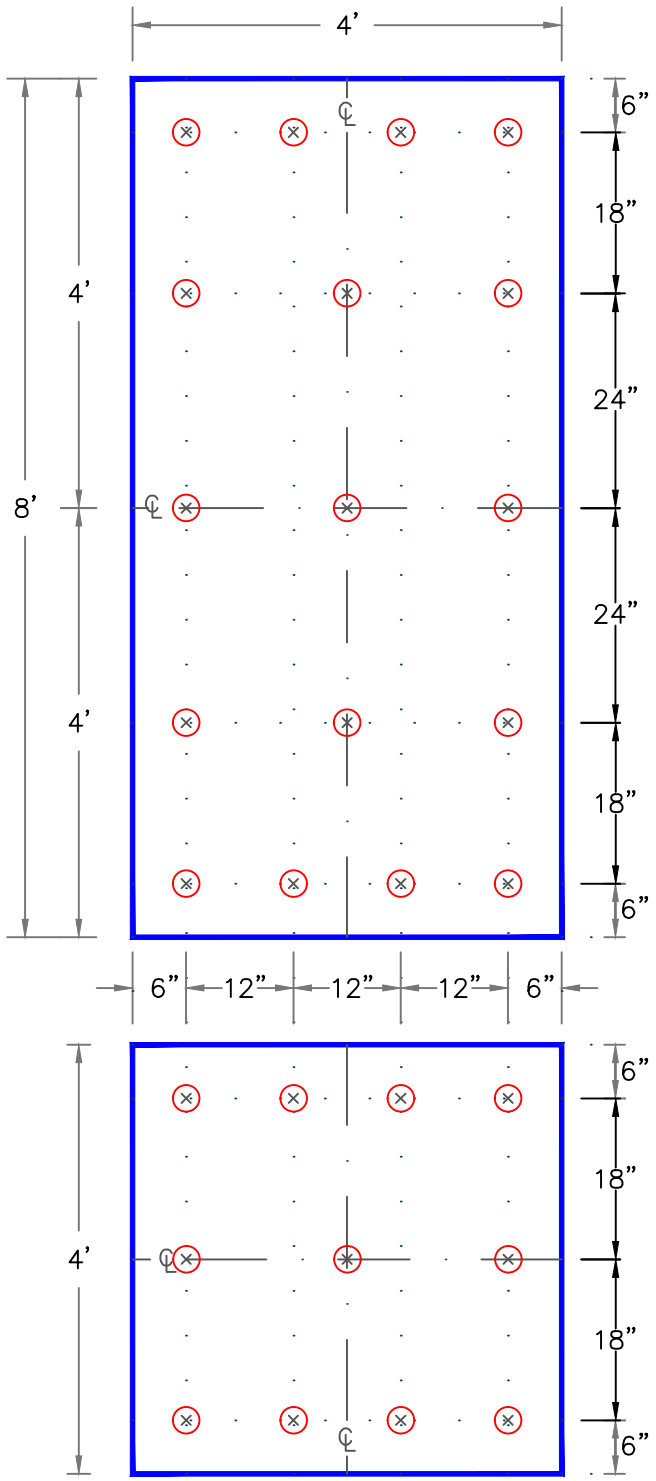

NOTES:

1. WHEN ENHANCED FASTENING IS REQUIRED AS PRESCRIBED IN FACTORY MUTUAL LOSS PREVENTION DATA SHEET 1–29, ANSI/SPRI WD–1 OR MIAMI–DADE COUNTY, REFER TO VERSICO'S DESIGN REFERENCE DR–05–18.
2. FOR CRITERIA ON INSULATION FASTENERS AND PLATES, REFER TO VERSICO SPECIFICATIONS.
3. IF A WIND SPEED WARRANTY GREATER THAN 55 MILES PER HOUR (25 METERS PER SECOND) OR A WARRANTY TERM GREATER THAN 20–YEARS IS SPECIFIED OR FOR SYSTEMS OVER 50'(15METERS), ADDITIONAL FASTENING MAY BE REQUIRED, REFER TO VERSICO SPECIFICATIONS.
4. OSB MUST BE POSITIONED WITH AN 1/8" (0.5cm) GAP BETWEEN BOARDS.
5. WHEN SPECIFIED, JOINTS IN OSB MUST BE STAGGERED WITH JOINTS IN INSULATION BELOW.

FEET TO CENTIIMETERS	
4'	8'
122	244

	INCHES TO CENTIMETERS																
inch	1/4"	1/2"	3/4"	1"	1.5"	2"	2.5"	3"	4"	5"	6"	7"	8"	9"	10"	11"	12"
cm	1	1.5	2	2.5	4	5	6.5	7.5	10	13	15	18	20	23	25	28	30

VERSICO ROOFING SYSTEMS

© 2024 VERSICO

OSB SHEATHING ATTACHMENT

→ FASTENER & PLATE

→ CENTER LINE

→ GUIDE LINE

ADHERED SYSTEM

A–27.6

ATTACHMENT DETAILS — INSULATION / COVER BOARD

NOTES:

1. REFER TO VERSICO SPECIFICATIONS FOR PRODUCT DATA SHEETS FOR APPROPRIATE BEAD SPACING BASED UPON THE BUILDING HEIGHT, WARRANTY TERM AND ACCEPTABLE SUBSTRATE.

2. THE SURFACE TO WHICH ADHESIVE IS TO BE APPLIED SHALL BE DRY, FREE OF FINS, PROTRUSIONS, SHARP EDGES, LOOSE AND FOREIGN MATERIALS, OIL AND GREASE. AREA SHOULD BE CLEANED WITH AN AIR BLOWER.

3. PREVIOUSLY UNEXPOSED ASPHALT OR RESIDUE MUST BE PRIMED WITH VERSICO CAVGRIP, 702 OR 702LV PRIMER.

4. SEAL ALL GAPS IN THE CONCRETE DECK WITH VERSICO 725TR OR OTHER SUITABLE MATERIAL TO AVOID CONDENSATION ISSUES OR FILL WITH VERSICO INSULATION ADHESIVE.

5. AT THE BEGINNING OF THE INSULATION ATTACHMENT PROCESS AND PERIODICALLY THROUGHOUT THE DAY, CHECK THE ADHESION OF BOARDS TO ENSURE A TIGHT BOND IS CREATED AND MAXIMUM CONTACT IS ACHIEVED.

6. WALK THE BOARDS INTO THE ADHESIVE AND ROLL USING A 30" WIDE, 150 POUND SEGMENTED STEEL ROLLER TO ENSURE FULL EMBEDMENT.

7. ONE PERSON SHOULD BE DESIGNATED TO WALK AND ROLL IN ALL BOARDS. RELIEF CUT MAY BE NECESSARY TO ALLOW LIFTED BOARD TO LAY FLAT, OR CONSTANT WEIGHT (10LBS MINIMUM FOR 5–15 MINUTES PER LIFTED AREA) MAY BE NECESSARY TO ACHIEVE ADEQUATE ADHESION

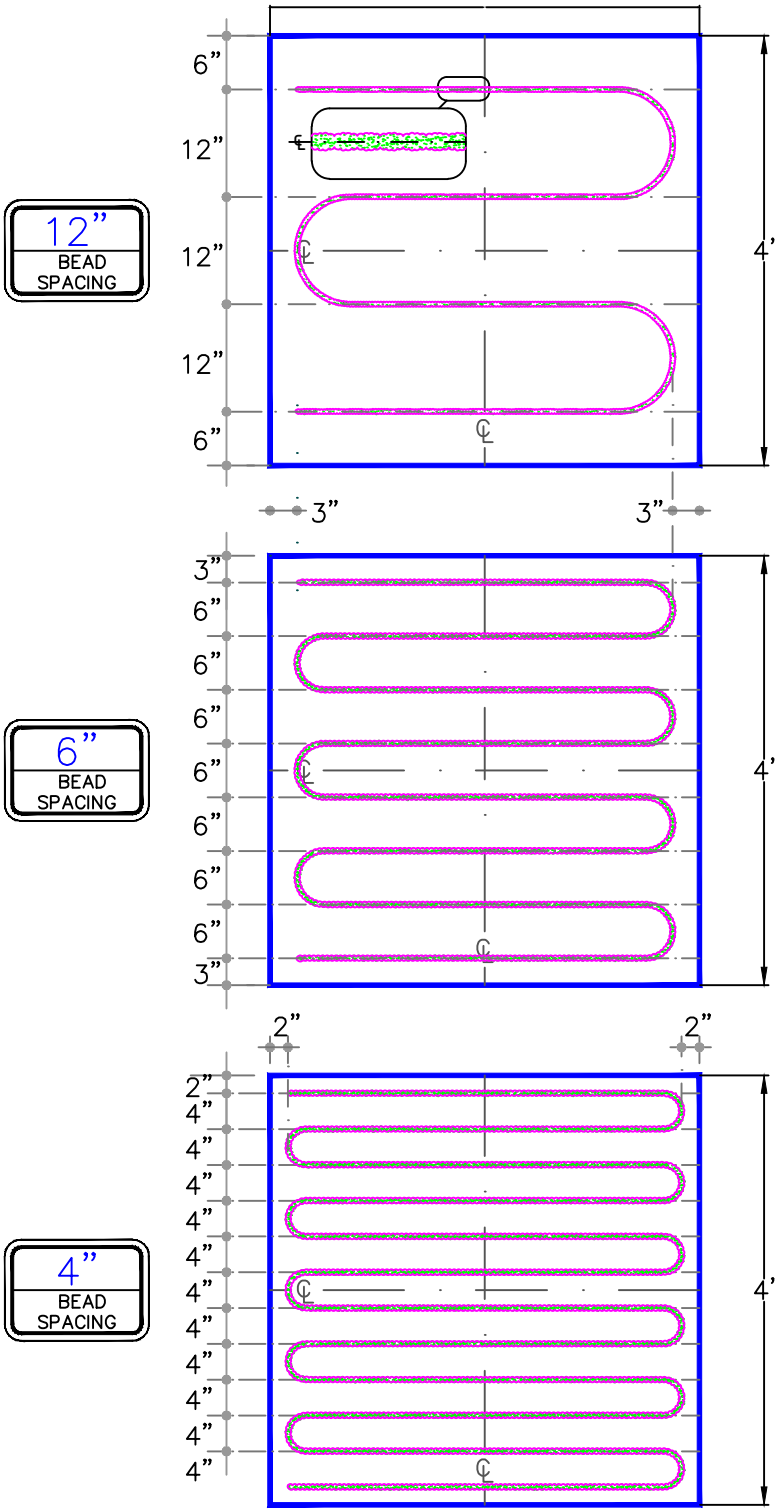

FEET TO CENTIIMETERS	
4'	8'
122	244

	INCHES TO CENTIMETERS																
inch	1/4"	1/2"	3/4"	1"	1.5"	2"	2.5"	3"	4"	5"	6"	7"	8"	9"	10"	11"	12"
cm	1	1.5	2	2.5	4	5	6.5	7.5	10	13	15	18	20	23	25	28	30

VERSICO ROOFING SYSTEMS

© 2024 VERSICO

INSULATION/COVER BOARD ATTACHMENT USING BEAD ADHESIVE

FOAM ADHESIVE
CENTER LINE
GUIDE LINE

ADHERED SYSTEM

A – 27.7

ATTACHMENT DETAILS — INSULATION / COVER BOARD

NEW CONSTRUCTION OR RE-ROOF/TEAR OFF PROJECTS WITH SECUROCK, DENS-DECK, RECOVERY BOARD OR ANY VERSICO APPROVED INSULATION MIN 1-1/2" (38mm) THICK

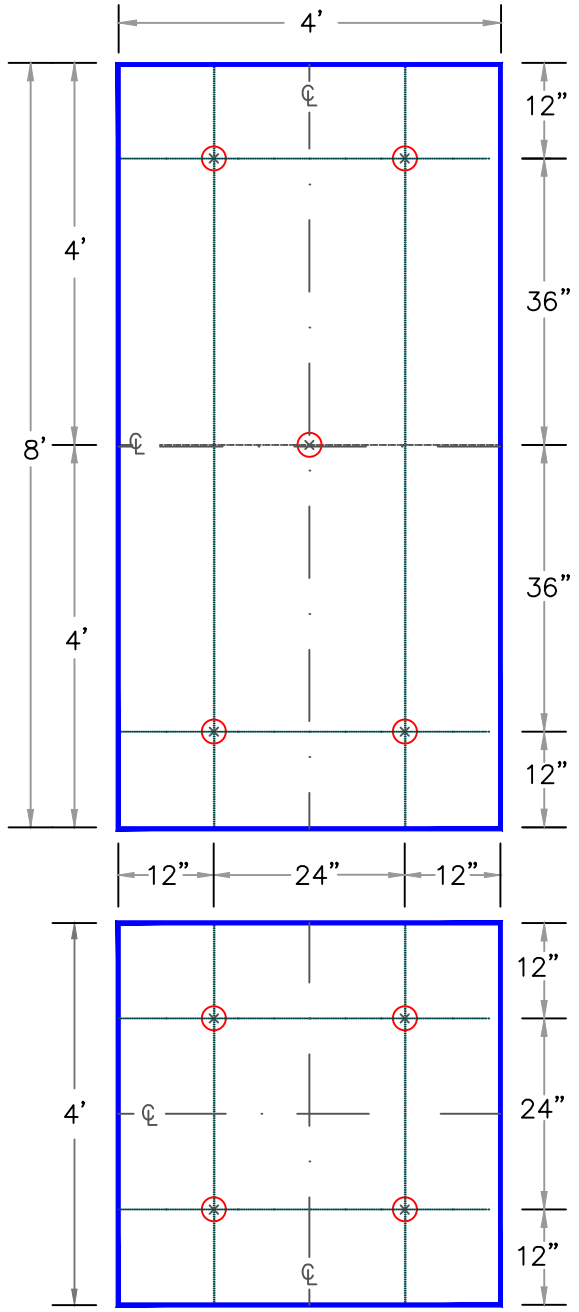

RE-ROOF/NO TEAR OFF PROJECTS WITH POLYISOCYANURATE LESS THAN 1-1/2" (38mm) THICK

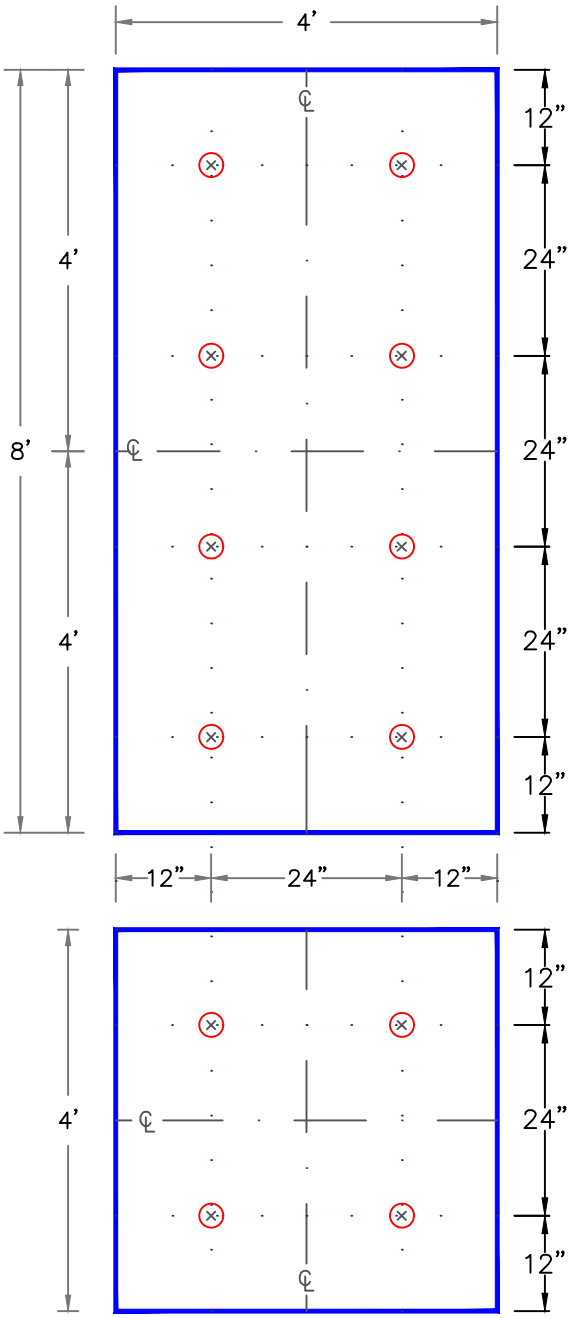

NOTE:

FOR CRITERIA ON INSULATION FASTENERS AND PLATES, REFER TO VERSICO SPECIFICATIONS.

FEET TO CENTIIMETERS	
4'	8'
122	244

	INCHES TO CENTIMETERS																
inch	1/4"	1/2"	3/4"	1"	1.5"	2"	2.5"	3"	4"	5"	6"	7"	8"	9"	10"	11"	12"
cm	1	1.5	2	2.5	4	5	6.5	7.5	10	13	15	18	20	23	25	28	30

VERSICO ROOFING SYSTEMS

© 2024 VERSICO

INSULATION/COVER BOARD ATTACHMENT FOR ALL WARRANTY DURATIONS

→ FASTENER & PLATE

→ CENTER LINE

→ GUIDE LINE

MECHANICALLY ATTACHED SYSTEM

MA-27

ATTACHMENT DETAILS — COVER BOARD

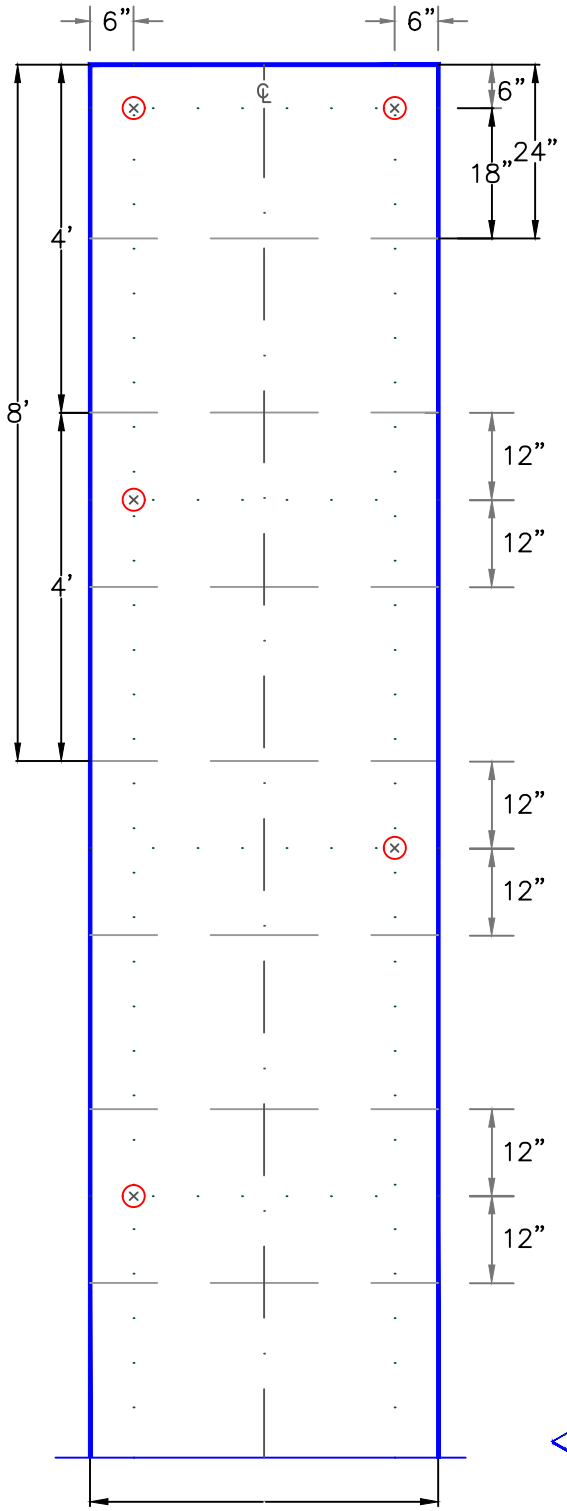

NOTES:

1. INSTALL R–TECH RECOVER BOARD WITH CONTINUOUS SIDE JOINTS AND END JOINTS STAGGERED SO THEY ARE OFFSET BY A MINIMUM OF 12” (30cm) FROM THE END JOINTS IN ADJACENT ROWS.
2. INSULATION SHOULD ABUT TIGHTLY AGAINST ADJACENT BOARDS.
3. IF R–TECH FANFOLD RECOVER BOARD IS BEING INSTALLED OVER AN EXISTING LAYER OF INSULATION, ALL JOINTS MUST BE OFFSET A MINIMUM OF 6” (15cm) BETWEEN LAYERS.
4. FASTENERS SHOULD NEVER BE CLOSER THAN 6” (15cm) FROM THE EDGES OF THE BOARD.
5. CARE MUST BE TAKEN TO AVOID OVERDRIVING OR UNDER–DRIVING THE FASTENER AND PLATE ASSEMBLY.
6. METALLIC FACER PERMITS THE USE OF R–TECH RECOVER BOARD UNDER EPDM MECHANICALLY ATTACHED ASSEMBLIES IN NORTHERN CLIMATES (CONTACT VERSICO FOR ACCEPTANCE).

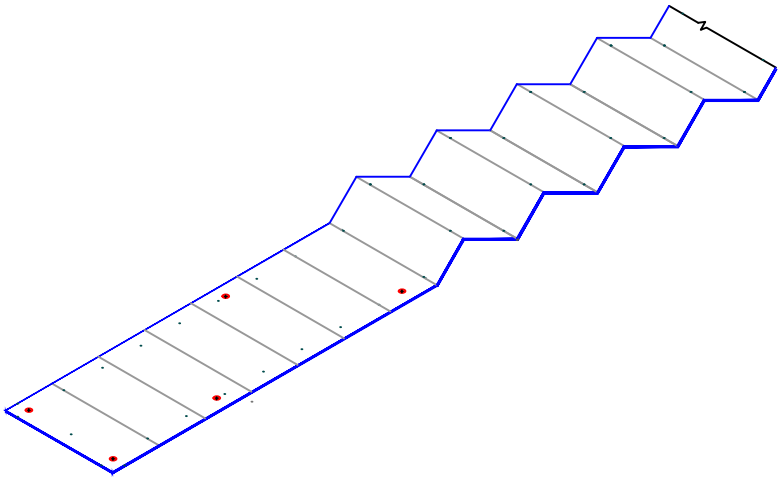

FEET TO CENTIIMETERS	
4’	8’
122	244

	INCHES TO CENTIMETERS																
inch	1/4”	1/2”	3/4”	1”	1.5”	2”	2.5”	3”	4”	5”	6”	7”	8”	9”	10”	11”	12”
cm	1	1.5	2	2.5	4	5	6.5	7.5	10	13	15	18	20	23	25	28	30

VERSICO ROOFING SYSTEMS
© 2024 VERSICO

R–TECH FANFOLD ROOF UNDERLAYMENT

FASTENER & PLATE
CENTER LINE
GUIDE LINE

MECHANICALLY ATTACHED SYSTEM

MA–27.3

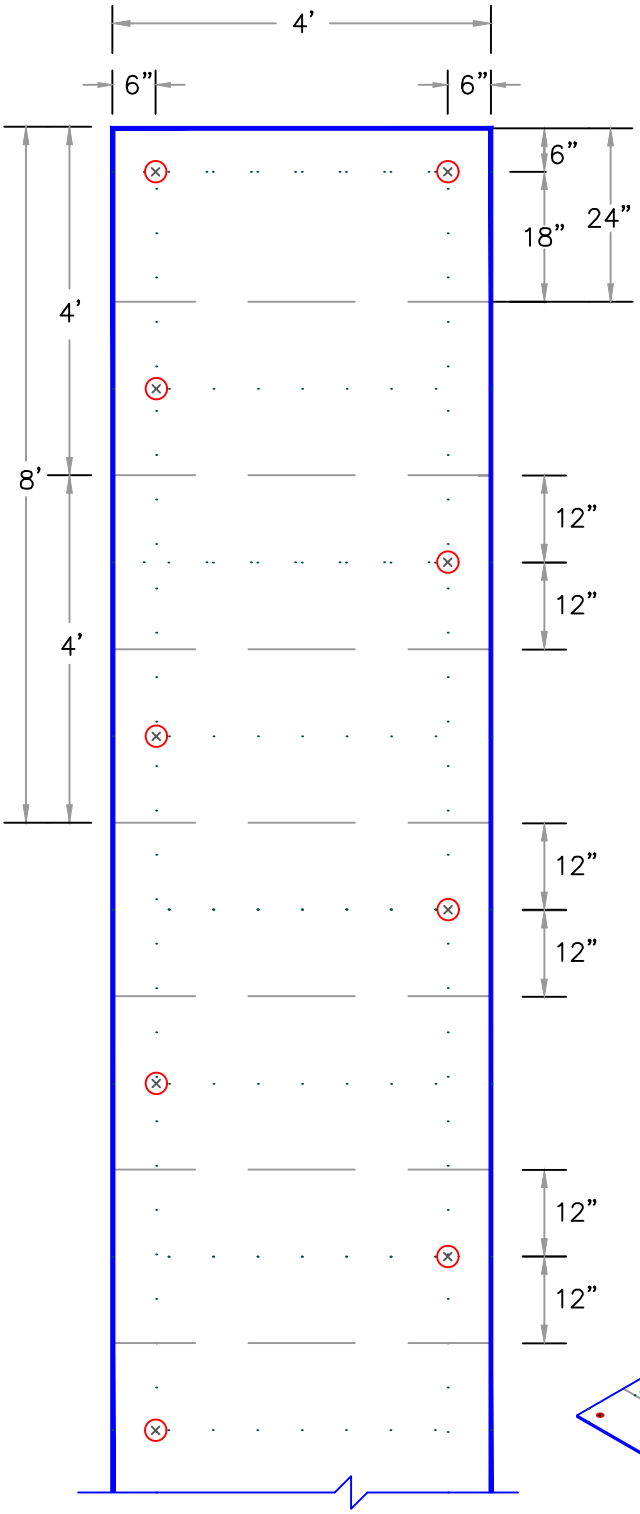

NOTES:

1. INSTALL R-TECH RECOVER BOARD WITH CONTINUOUS SIDE JOINTS AND END JOINTS STAGGERED SO THEY ARE OFFSET BY A MINIMUM OF 12" (30cm) FROM THE END JOINTS IN ADJACENT ROWS.
2. INSULATION SHOULD ABUT TIGHTLY AGAINST ADJACENT BOARDS.
3. IF R-TECH FANFOLD RECOVER BOARD IS BEING INSTALLED OVER AN EXISTING LAYER OF INSULATION, ALL JOINTS MUST BE OFFSET A MINIMUM OF 6" (15cm) BETWEEN LAYERS.
4. FASTENERS SHOULD NEVER BE CLOSER THAN 6" (15cm) FROM THE EDGES OF THE BOARD.
5. CARE MUST BE TAKEN TO AVOID OVERDRIVING OR UNDER-DRIVING THE FASTENER AND PLATE ASSEMBLY.
6. METALLIC FACER PERMITS THE USE OF R-TECH RECOVER BOARD UNDER EPDM MECHANICALLY FASTENED ASSEMBLIES IN NORTHERN CLIMATES (CONTACT VERSICO FOR ACCEPTANCE).
7. FOR NON-FM ASSEMBLY REFER TO DETAIL MF-27.3

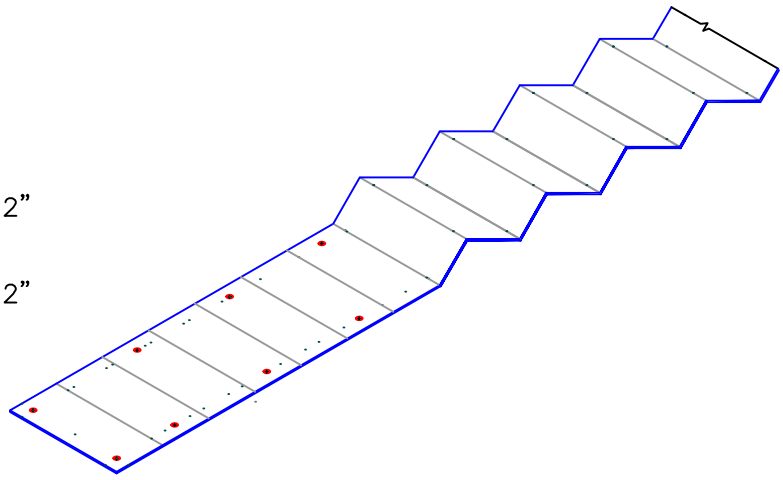

FEET TO CENTIIMETERS	
4'	8'
122	244

	INCHES TO CENTIMETERS																
inch	1/4"	1/2"	3/4"	1"	1.5"	2"	2.5"	3"	4"	5"	6"	7"	8"	9"	10"	11"	12"
cm	1	1.5	2	2.5	4	5	6.5	7.5	10	13	15	18	20	23	25	28	30

VERSICO ROOFING SYSTEMS
© 2024 VERSICO

R-Tech FANFOLD ROOF UNDERLAYMENT FOR FM ASSEMBLIES

→ FASTENER & PLATE
→ CENTER LINE
→ GUIDE LINE

MECHANICALLY ATTACHED SYSTEM

MA-27.4

ATTACHMENT DETAILS — COVER BOARD

NEW CONSTRUCTION OR RE-ROOF/TEAR OFF PROJECTS WITH 1/2" SecurShield HD COATED GLASS FACER

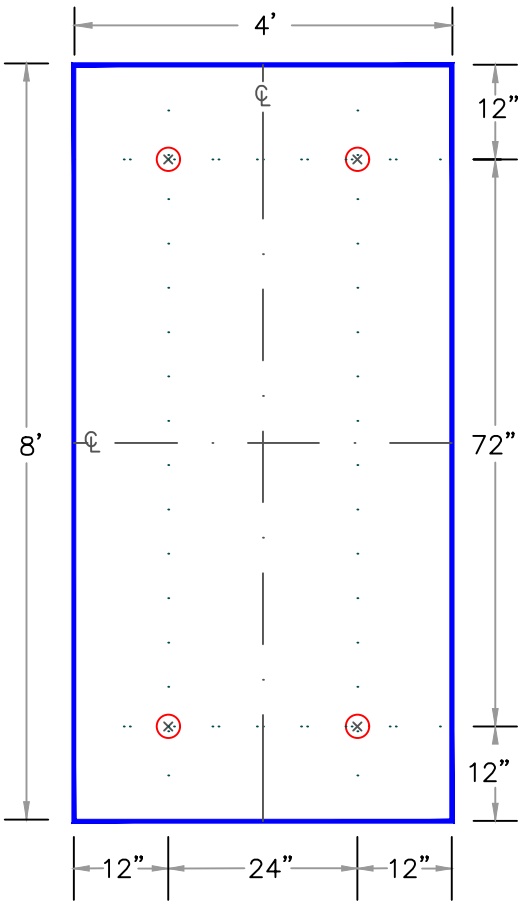

NEW CONSTRUCTION OR RE-ROOF/TEAR OFF PROJECTS WITH 20 OR 25 PSI SecurShield ANY THICKNESS

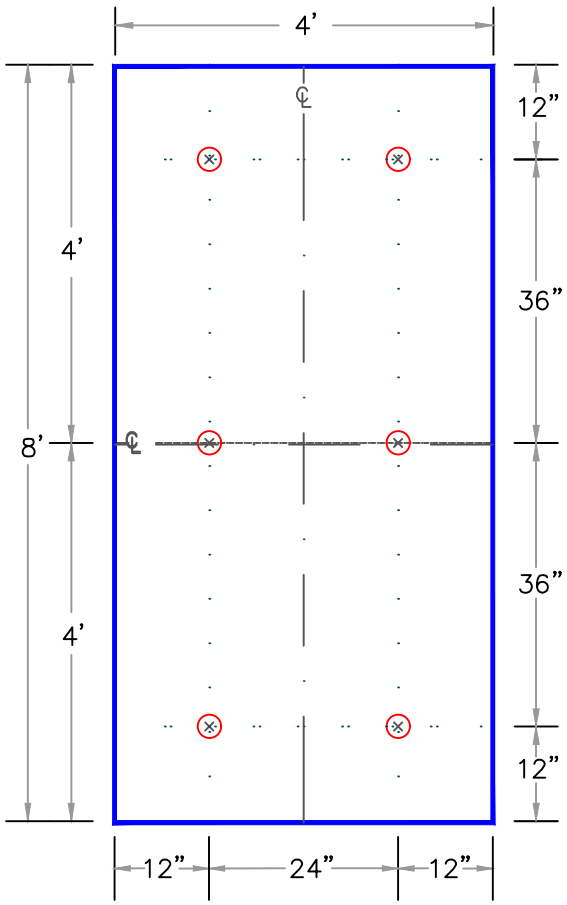

FEET TO CENTIIMETERS	
4'	8'
122	244

	INCHES TO CENTIMETERS																
inch	1/4"	1/2"	3/4"	1"	1.5"	2"	2.5"	3"	4"	5"	6"	7"	8"	9"	10"	11"	12"
cm	1	1.5	2	2.5	4	5	6.5	7.5	10	13	15	18	20	23	25	28	30

VERSICO ROOFING SYSTEMS

© 2024 VERSICO

INSULATION/COVERBOARD ATTACHMENT WHEN USING SecurShield FAMILY PRODUCTS FOR ALL WARRANTIES LENGTHS

FASTENER & PLATE

CENTER LINE

GUIDE LINE

MECHANICALLY ATTACHED SYSTEM

MA-27.5

Copyright 2024 Versico

Versico and the Versico logo are Trademarks of Versico

Dens Deck and Dens Deck Prime are Trademarks of Georgia-Pacific Gypsum LLC

This specification represents the applicable information available at the time of its publication. Owners, specifiers and Versico authorized roofing contractors should consult Versico or their Versico Independent Sales Representative for any information, which has subsequently been made available.

Review the appropriate Versico warranty for specific warranty coverage, terms, conditions and limitations.

SPECIFICATION SUPPLEMENT

G-09-20

Aqua Base 120 Bonding Adhesive

January 2024

The information contained in this supplement serves as a criteria for Specifiers and Authorized Contractors regarding the design and installation of Versico Roofing Systems and related products. Additional information essential for the design and installation of the Roof Systems mentioned herein are also included in the respective Specification for each Roof System and in the Design Reference Section of the Versico Technical Manual. Specifiers and Authorized Contractors are advised to reference all applicable sections.

Aqua Base 120 Bonding Adhesive may be used as a one-sided, wet lay-in adhesive on horizontal surfaces with VersiFleece TPO membrane. It can also be used as a two-sided contact adhesive with standard EPDM or TPO membranes.

NOTE: The use of Aqua Base 120 Bonding Adhesive to adhere VersiFleece membrane directly to lightweight insulating concrete is not permitted.

A. **General Cautions and Warnings**

1. Review the applicable Safety Data Sheet for complete safety information prior to use.

2. This adhesive is designed to be applied when the ambient temperature is 40°F (4°C) and rising. Do not apply if ambient temperature will drop below 32°F (0°C) before adhesive dries. Do not allow to freeze. Do not store below 40°F (4°C).

3. **Extended drying times can be expected in cool, overcast, humid, shaded or late day applications. The adhesive must be dry to avoid permanent blisters from trapped moisture.**

4. Opened containers of Aqua Base 120 Bonding Adhesive should be used within 48 hours. The adhesive will form a thick surface skin that will not re-dissolve. Adhesive can be used once the skinned layer is removed.

5. Aqua Base 120 Bonding Adhesive is not acceptable over existing roof systems or decks with residual adhesive or asphalt. A porous substrate is required for Aqua Base to work properly.

6. Immediately roll the bonded portion of the sheet with a 30” wide, 150 lb segmented, weighted steel roller to achieve maximum contact. **Rolling is critical.**

7. When selecting an approved underlayment from the Table included in this specification supplement, the corresponding specification should be referenced to determine the acceptable underlayment attachment method.

8. Tables included in Warranty Section of the appropriate Roofing System Specification contain various fastening densities which shall be referenced.

VERSICO ROOFING SYSTEMS

B. **Warranty Considerations**

Projects incorporating the use of **Aqua Base 120 Adhesive are limited to warranties with peak gust wind speed coverage of 55 mph, see "Aqua Base Warranty Criteria" Table**. Versico may be contacted for projects where greater warranty coverage is required.

Aqua Base Warranty Criteria

Membranes	Membrane Adhesion Method	Warranty Duration	
		Up to 15 Year	20 Year Max
		Minimum Underlayments (1)	
EPDM and TPO (Non-Fleece)	**Two Sided Contact Method** (Adhesive applied to both surfaces)	1-1/2" (20-psi) Polyisocyanurate or SecurShield	1-1/2" (20-psi) Polyisocyanurate or SecurShield
		7/16" Oriented Strand Board (OSB) or 15/32" 5-Ply Plywood	7/16" Oriented Strand Board (OSB) or 15/32" 5-Ply Plywood
		1/2" SecurShield HD or HD Plus	1/2" SecurShield HD or HD Plus
		1/4" Securock (2)	1/2" Securock (2)
		Structural Concrete or Cellular Lightweight Concrete(3)	Structural Concrete or Cellular Lightweight Concrete(3)
VersiFleece (EPDM and TPO)	**Wet Lay-in Method** (Adhesive applied to substrate only)	1-1/2" (20-psi) Polyisocyanurate or SecurShield	1-1/2" (20-psi) SecurShield
		7/16" Oriented Strand Board (OSB) or 15/32" 5-Ply Plywood	7/16" Oriented Strand Board (OSB) or 15/32" 5-Ply Plywood
		1/2" SecurShield HD or HD Plus	1/2" SecurShield HD or HD Plus
		1/4" Securock (2)	1/4" Securock (2)
		Structural Concrete	Structural Concrete

(1)All Versico Products listed for higher duration coverage can also be used for Warranties for lower duration coverage. (i.e. 20 YR underlayment may be used for 15 YR underlayment).
(2)Application over insulation only.
(3) Over Vented Steel Deck
(4) VersiFleece EPDM and water-based adhesives should not be used over coated glass facer.

C. **Application**

1. Stir the Aqua Base 120 Bonding Adhesive until settled material or phased liquid is redistributed and the adhesive is uniform in color.

2. Apply adhesive to the membrane and the substrate (at the recommended rate) in a uniform manner avoiding globs, puddles, and uncoated areas.

3. The typical application rate is approximately 100-120 square feet per gallon/ finished surface. (Applied to membrane and substrate when used as contact adhesive). Refer to Technical Data Bulletin for additional information.

4. Application methods:

a) Roller Application – Use a medium nap roller.

b) Mechanical Roller Application – Follow the manufacturer's safety and use procedures.

c) Mechanical Spray Application – Follow the manufacturer's safety and use procedures.

1) Tip sizes between .017" to .025" in a Graco Ultra or ULTRA Max II gun.

2) A minimum fluid pressure of 2,500 psi is required for a fair pattern.

3) Back rolling is recommended.

4) Flush with water at the end of the day.

5. **Two-sided Contact Method** (Standard Membrane):

a) Apply Aqua Base 120 Bonding Adhesive to the membrane and the substrate at the recommended rate.

1) The adhesive must be allowed to dry until it turns translucent and does not transfer to a dry finger touch or pull away from the membrane. The dried adhesive should remain tacky before assembly.

2) Mate the membrane with the adhesive-coated substrate, while avoiding wrinkles.

3) Immediately roll the bonded portion of the sheet with a 30" wide, 150 lb segmented, weighted steel roller to achieve maximum contact.

CAUTION: Pay particular attention to rolling the membrane along the insulation joints due to the slight step-off of the facer. The adhesive contains no solvents to react with the membrane, and therefore rolling the sheet is critical.

NOTE: Extended drying times can be expected in cool, overcast, humid, shaded or late day applications. The adhesive must be dry to avoid permanent blisters from trapped moisture.

4) Coated areas exposed to moisture shall be allowed to dry and then recoated.

5) All adhesive residues in the splice area must be removed.

b) **For vertical walls**, Let the wall flashing membrane relax and warm to minimize the natural tendency of the membrane to curl.

1) Apply a medium to heavy coat of adhesive to the wall first and then a standard coat to the flashing membrane and allow thorough drying. Adhesive will turn translucent in color when dry.

CAUTION: Not allowing the adhesive to dry completely will result in poor adhesion strength or blisters occurring over time.

2) Mate the membrane with the adhesive-coated wall, while avoiding wrinkles.

3) Immediately broom the bonded portion of the sheet with a stiff-bristle push-broom and roll the membrane, starting in the angle change and working the membrane up the wall, using a 3"-wide "J" roller (preferred) to achieve maximum contact. Roll up from the base evenly and work in small sections gaining good attachment at the lower portions before moving up to the top of the membrane.

NOTE: Temporary pinning or taping the top membrane edge to the wall may be necessary to prevent membrane curl back until the termination detail can be completed.

6. **Wet Lay-in Method** (VersiFleece EPDM/TPO Membrane)

a) Coat the substrate with Aqua Base 120 Bonding Adhesive and roll VersiFleece EPDM/TPO 100-, 115- or 135-mil membrane into the wet adhesive.

1) Avoid heavy or thin application of adhesive. Immediately install the membrane while the adhesive is still wet. If adhesive has become translucent, recoat with additional adhesive.

CAUTION: Care must be taken with the "barn door" method of sheet installation to avoid dry (translucent) adhesive. Lift the membrane in a few areas to ensure adhesive is transferring to the fleece.

2) Roll with a 150 lb segmented, weighted steel roller to achieve maximum contact.

NOTE: Pay particular attention to rolling the membrane along the insulation joints due to the slight step-off of the facer. All adhesive residue in the splice area must be removed.

3) Cure rates are between 12-72 hours depending on porosity of substrate and weather conditions. Re-rolling within 24 hours may be necessary if the substrate is uneven or the sheet contains some fullness. Temporary weighting of the membrane may be necessary until the adhesive cures to address pronounced sheet fullness.

CAUTION: Do not use the VersiFleece AC membranes for the wet lay-in application.

b) **For vertical walls**, Coat the fleece backing and allow the adhesive to completely dry.

1) Test for dryness by pressing the back of a finger into the fleece to check that the adhesive is dry throughout the fleece layer.

2) Once the adhesive on the fleece is dry, apply a standard coat of adhesive to the wall and a second coat to the fleece backing and allow drying. Adhesive will turn translucent in color when dry.

3) Mate the membrane with the adhesive-coated wall, while avoiding wrinkles.

4) Immediately broom the bonded portion of the sheet with a stiff-bristle push-broom or roll the membrane using a 3”-wide “J” roller (preferred) to achieve maximum contact.

CAUTION: Please note the fleece will develop a dry top surface while still holding moisture in the fleece and does require complete drying prior to the mating of the membrane to the wall substrate. Installing the membrane while the adhesive is still wet will trap moisture and cause blisters or loose membrane.

NOTE: Extended drying times can be expected in cool, overcast, humid, shaded or late day applications. The adhesive must be dry to avoid permanent blisters from trapped moisture.

5) Coated areas exposed to moisture shall be allowed to dry and then recoated.

6) All adhesive residue in the splice area must be removed.

Copyright 2024 Versico

Versico, VersiGard, VersiWeld, VersiFlex and VersiFleece are Trademarks of Versico.

This Design Reference represents the applicable information available at the time of its publication. Owners, specifiers and Contractors should consult Versico or their Versico Independent Sales Representative for any information that has subsequently been made available.

Review the appropriate Versico Warranty for specific warranty coverage, terms, conditions and limitations

SPECIFICATION
SUPPLEMENT

G-10-18

Metal Edging and Details

January 2024

The information contained in this supplement serves as a criteria for Specifiers and Authorized Contractors regarding the design and installation of Versico Roofing Systems and related products. Additional information essential for the design and installation of the Roof Systems mentioned herein are also included in the respective Specification for each Roof System and in the Design Reference Section of the Versico Technical Manual. Specifiers and Authorized Contractors are advised to reference all applicable sections.

Introduction

One of the leading causes of wind related disturbances is improperly designed, manufactured or installed metal fascia systems. Most of the time, shop fabricated metal accessories do not meet industry recognized standards.

Countless studies, many initiated by hurricanes, have pointed to metal edge components as a major contributor to roof failures. These components are vulnerable since the building edge is first hit, with winds and uplift pressures are always greatest at perimeters and especially roof corners.

General

When metal edging or coping is to be installed (particularly when shop fabricated), it is strongly advised that the design conforms with the Factory Mutual recommendations identified in Loss Prevention Data Bulletin 1-49 and with SMACNA (Sheet Metal and Air Conditioning National Association) specifications. To ensure such compliance, specify FM 1-90 approved metal edge systems should be specified.

The securement of perimeter wood nailers, play an equally important role in the overall performance of metal fascia systems. Design Criteria for the attachment of wood nailers and associated metal edge components are also identified in the FM 1-49 Bulletin and summarized in the **Design Reference DR-08-11 "Wood Nailers and Securement Criteria"**. This information should be referenced when selecting an appropriate attachment method.

Often, metal edging costs are solely judged on the material linear foot cost itself alone. Significant savings can be realized when closer attention is given to overall installed costs, where labor and associated material savings are factored in. Edge systems that minimize flashing material and reduce installation time can be of significant benefit when looking at overall roof edge costs. Products reusability (for the purpose of repairs and eventual roof replacement) is also seldom accounted for, although the owner can recognize overall life cycle cost savings if properly evaluated.

Versico Edging/Coping

Versico supplies a wide range of metal fascia systems which meet the ES-1 design guidelines and carry FM Class 1-90 approval or greater. Versico's metal edging is also covered by the Versico Membrane System Warranty. Contact Versico for detailed information concerning available pre-fabricated metal edging and coping.

Pre-Fabricated Edgings and Copings

1. **VersiTrim 200 Fascia**: A snap-on edge system consisting of a 24 gauge galvanized metal water dam and 40, 50 or 63-mil thick aluminum Kynar 500, clear and colored anodized finish or 22 or 24 gauge steel, Kynar 500 finish. The fascia is available in a variety of colors and heights varying from 5" to 12-1/2". Custom fascias and colors are available upon request. ANSI/SPRI/FM-4435 ES-1 certified.

2. **VersiTrim 300 Fascia System:** A snap-on edge system consisting of a 24 gauge galvanized metal spring clip water dam and 50 or 63-mil thick aluminum Kynar 500, colored anodized finish or 24 gauge steel, Kynar 500 finish. The

VERSICO
ROOFING SYSTEMS

fascia is available in a variety of colors and heights varying from 5" to 10". Custom fascias and colors are available upon request. ANSI/SPRI/FM-4435 ES-1 certified.

3. **VersiTrim 2000 Standard Fascia:** An anchor bar roof edge fascia system consisting of heavy .100" thick extruded aluminum bar, corrosion resistant stainless steel fasteners and snap-on fascia cover used with Adhered, Mechanically Fastened assemblies. Refer to installation instructions for various sizes, colors and accessories ANSI/SPRI/FM-4435 ES-1 certified. Also available in **VersiTrim 2000 Extended Fascia** (Up to 13" Face Height) and **VersiTrim 2000 Canted Fascia**.

4. **VersiTrim 3000 Roof Edge System**: A metal anchor bar fascia system consisting of a 20 gauge steel retainer bar, corrosion resistant fasteners and a 32, 40, 50 or 63-mil thick aluminum or 24 gauge steel snap-on fascia cover. It is for use in Fully Adhered and Mechanically Fastened Roofing Systems. ANSI/SPRI/FM-4435 ES-1 certified. Also available in **VersiTrim 3000XT Roof Edge System** (Up to 13" Face Height) with an extruded aluminum retainer bar for added performance.

5. **VersiTrim One Fascia System:** A snap-on edge system consisting of a 20 gauge steel or 50-mil aluminum retainer bar, corrosion resistant fasteners and a 24 gauge or 40, 50 or 63-mil Kynar finished aluminum fascia cover. Available in face sizes up to 8". ANSI/SPRI/FM-4435 ES-1 certified.

6. **VersiTrim 200 Coping:** A snap-on coping system that incorporates 20 gauge anchor cleats with pre-slotted holes, a concealed joint cover and 10' or 12' continuous sections of coping cap consisting of 40, 50 or 63-mil thick Kynar 500, clear and colored anodized finish or 24 gauge steel, Kynar 500 finish. The coping cap is available in a variety of colors and widths. Custom pieces such as tees, crosses, radius copings, etc., are also available. ANSI/SPRI/FM-4435 ES-1 certified. Also available in **VersiTrim 200 Gold Coping** with 16 gauge anchor cleats for added performance and **VersiTrim 200 Cantilever Coping** for parapet walls with a non-structural exterior building facade.

7. **VersiTrim 300 Coping:** A snap-on coping system that incorporates 20 gauge anchor cleats with pre-slotted holes, a concealed joint cover and 12' continuous sections of coping cap consisting of 40, 50 or 63-mil thick Kynar 500, clear and colored anodized finish or 24 gauge steel, Kynar 500 finish. The coping cap is available in a variety of colors and widths. Custom pieces such as tees, crosses, radius copings, etc., are also available. ANSI/SPRI/FM-4435 ES-1 certified. Also available in **VersiTrim 300 Plus Coping** with 16 gauge anchor cleats for added performance.

8. **VersiTrim One Coping:** A mechanically fastened coping system consisting of a 22 gauge retainer bar (face side only), corrosion resistant fasteners and a 24 gauge or 0.040 aluminum Kynar finished coping cover. The coping cover is secured by clipping on the retainer bar and fastened on the backside with corrosion resistant fasteners (with rubber washer). Available for wall thicknesses up to 12". ANSI/SPRI/FM-4435 ES-1 Certified.

9. **VersiTrim Drip Edge:** Designed for use on Fully Adhered and Mechanically Attached Roofing Systems. Includes a 22 gauge continuous 12' pre-punched 90-degree angle cleat and 10' or 12' long fascia sections. Incorporates concealed joint covers and strong 1-1/4" ring shank nails to provide long-term holding power. A selection of colors in 24 gauge steel, Kynar® 500 and 32-mil aluminum finish or Kynar 500 is available. ANSI/SPRI/FM-4435 ES-1 Certified.

10. **VersiTrim Heat-Weldable Drip Edge:** Pre-fabricated PVC or TPO-coated metal edging. Heat-weld membrane directly to edge. Available in sizes up to 8" fascia height and in colors: white, gray or tan. Also available with factory-applied TPO or PVC flashing.

11. **VersiTrim Term Bar Fascia:** A 1.75" wide formed aluminum termination bar with pre-slotted fastening holes for ease of locating and installing. The decorative cover is available in 0.040" aluminum or 24-gauge galvanized steel. VersiTrim Term Bar Fascia is manufactured in 12' lengths for fewer joints/seams, fewer sections to handle and faster installation.

Versico Metal Edging			
Product	**Type**	**FM Approval**	**ES-1 Compliant**
VersiTrim 300	Coping	1-90 (20 ga cleat)	Yes
VersiTrim 300	Fascia	1-135	Yes
VersiTrim 3000	Fascia	1-135	Yes
VersiTrim 3000XT	Fascia	1-135	Yes
VersiTrim 200	Coping	1-90	Yes
VersiTrim 200	Fascia	1-150	Yes
VersiTrim 2000	Fascia	1-225	Yes
VersiTrim 2000	Extended Fascia	1-135	Yes
VersiTrim 2000	Canted Fascia	1-105	Yes
VersiTrim One	Fascia	1-120	Yes

Shop Fabricated Edging

A. **Supplied by Versico**

1. **VersiWeld Coated Metal:** A 24-gauge galvanized steel sheet coated with a layer of non-reinforced VersiWeld Flashing. The sheet is cut to the appropriate width and used to fabricate metal drip edges or other roof perimeter edging profiles. VersiWeld Membrane may be heat welded directly to the coated metal. Coated metal is available in sheets 4' x 10' and comes packaged 25 sheets per pallet (also available packaged 10 sheets per pallet on a direct ship basis). Available in white, gray or tan.

2. **VersiFlex PVC Coated Metal:** A 24-gauge galvanized steel sheet coated with a layer of non-reinforced VersiFlex Flashing. The sheet is cut to the appropriate width and used to fabricate metal drip edges or other roof perimeter edging profiles. VersiFlex Membrane may be heat welded directly to the coated metal. Coated metal is available in sheets 4' x 10' and comes packaged 10 sheets per pallet. Available in white, gray or tan.

3. **Versico PVDF (Kynar) Coated Metal:** Galvalume steel or 3000 series Aluminum sheet coated with a PVDF (Kynar) finish. The sheet is cut to the appropriate width and used to fabricate metal coping or roof perimeter fascia profiles. Versico metal flat sheets are available in 31 colors in 4’x10’ sheets. Mill finish aluminum, anodized aluminum and bare G90 steel are available.

B. **Shop Fabricated Edging Requirements**

1. Shop Fabricated Metal Edging and Coatings must comply with SMACNA standards and design parameters outlined in the NRCA Waterproofing Manual. For ES-1 compliance, NRCA website should be accessed to determine required ES-1 certification.

Guide for Sheet Metal Fascia Edges

(Reprinted from the NRCA Roofing and Waterproofing Manual - Fourth Edition)

Recommended Minimum Gauges for Fascia and Cleat[1]				
Exposed Face Without Brakes "A" Dimension	Aluminum Alloy (3003-H14)	Galvanized or Coated (G60 & G90) Steel	Stainless Steel (302 & 304)	Cleat[2]
Up to 3" Face	.032"	24 ga.	26 ga.	Same gauge as fascia metal
3" to 6" Face	.040"	24 ga.	24 ga.	One gauge heavier than fascia metal
6" to 8" Face	.040"	24 ga.	24 ga.	One gauge heavier than fascia metal
8" to 10" Face	.050"	22 ga.	22 ga.	One gauge heavier than fascia metal
More Than 10"	Add brakes to stiffen or use two-piece face	Add brakes to stiffen or use two-piece face	Add brakes to stiffen or use two-piece face	One gauge heavier than fascia metal

Recommended Profiles and Fastening for Fascia and Cleat[1]

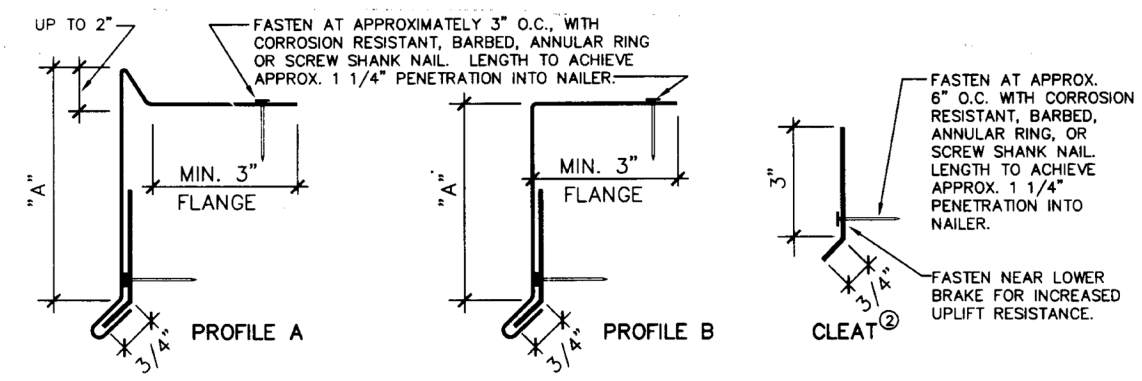

Notes:

1. Consideration must be given to wind zone and local conditions in regard to the selection of metal gauge, profile, and fastening schedule. Severe conditions or code and regulatory bodies may require more conservative designs. When using the above table, additional items should be considered, such as fastening pattern.

2. All cleats shall be continuous with lengths not to exceed 12 feet. Allow a 1/4" gap between pieces. Joints in cleat should not coincide with joints in fascia metal.

3. Inclusion of shop fabricated metal edging in the Versico Membrane System Warranty is limited to warranties with a duration of 20 years or less and peak wind speed coverage of less than 80 mph.

Copyright 2024 Versico

Versico and VersiTrim are Trademarks of Versico

This specification represents the applicable information available at the time of its publication. Owners, specifiers and Versico authorized roofing contractors should consult Versico or their Versico Independent Sales Representative for any information, which has subsequently been made available.

Review the appropriate Versico warranty for specific warranty coverage, terms, conditions and limitations.

SPECIFICATION
SUPPLEMENT

G-11-20

LIQUISEAL Liquid Flashing

January 2024

The information contained in this supplement serves as a criteria for Specifiers and Authorized Contractors regarding the design and installation of Versico Roofing Systems and use of liquid flashing to complete tie-in details and flash unusual and round penetrations. In addition to the information contained herein, attachment details 1 through 3 are included to provide the Specifiers and Authorized Contractors with quick access to specific information. Specifiers and Authorized Contractors are advised to reference all applicable details included with this spec supplement.

A. **General**

LIQUISEAL Liquid Flashing is a two-component, polyurethane-based system which creates a reinforced, cold-applied liquid flashing that is compatible with all Versico EPDM, TPO, PVC, and KEE HP membranes. LIQUISEAL Liquid Flashing is designed for use with oddly shaped penetrations and tying together dissimilar roofing systems without building an isolation curb or impeding drainage. LIQUISEAL Liquid Flashing is UV- and color-stable, solvent-free, low-VOC, and virtually odorless.

LIQUISEAL Liquid Flashing consists of the following products:

1. LIQUISEAL Resin – Two-component polyurethane-based resin, when mixed will be white or gray in color. Available in 0.56 gallon (2.1 l) sachets and 1.03 gallon (3.9 l) pails. Coverage rate of 13.6 square feet (1.26 meters square) per gallon (3.8 l).
2. LIQUISEAL Fleece – 50-mil thick, white, Non-woven, needle-punched polyester fabric reinforcement. Available in rolls of 13.8” (350 mm) and 27” (685 mm) widths by 164’-0” (50 m) length.
3. LIQUISEAL Metal Primer – A solvent-free, high solids, two-part, cold-applied polyurethane resin. Used to prime metal, EPDM, and other non-porous surfaces. Available in 0.25 gallon (0.9 l) sachets. Coverage rate of 25 square feet (2.3 square meters) per 0.25 gallon (0.9 l) sachet.
4. LIQUISEAL Concrete & Masonry Primer – A solvent-free, two-part, cold-applied liquid epoxy resin. Used with Surfacing Sand to prime concrete, masonry, and other porous surfaces. Available in 0.25 gallon (0.9 l) sachets and 1.1 gallon (4.2 l) pails. Coverage rate of 19 square feet (1.76 square meters) per 0.25 gallon (0.9 l) sachet.
5. LIQUISEAL Spiral Mixing Agitator – A 3” (7.62 cm) long steel spiral agitator with a 1/2” (1.27 cm) hex drive for use with handheld drills and mixers. Used to properly mix resin.
6. LIQUISEAL Surfacing Sand – Kiln-dried #00 - #35 graded sand suitable for broadcasting into LIQUISEAL Liquid Flashing Concrete & Masonry Primers for use in substrate preparation. Used with Concrete & Masonry Primer to promote proper adhesion and mechanical bond. Packaged in 50lb (22.6 kg) bags.

B. **Warranty**

Projects meeting the conditions below can be eligible for a maximum 20 year System Warranty with wind speed coverage up to 90 mph peak gusts. Projects requiring extended wind speed coverage warranty must be submitted to Versico for review prior to installation.

C. **Precautions**

1. Always store in a cool, dry location between 35 – 80°F (1.7– 27°C). Do not store in direct sunlight. Approximate shelf life is 12 months with proper storage. Best practice is to store material at 65 – 70°F (18 – 21°C) for 24 hours before use.

2. Do not install if ambient temperature is below 40°F (4°C) or above 90°F (32°C).

3. Do not break down work packs into smaller quantities; mix the entire work pack.

4. Prepare surfaces and pre-cut all fleece before mixing resin. Pot life will be shorter as ambient temperature rises.

5. Use appropriate safety glasses and protect hands and wrists by wearing gloves.

D. **Installation**

1. **Surface Preparation**: Prepare all substrates by removing any irregularities and any loose or foreign material such as dirt, water, grease, oil, lacquers, or release agents. Prepare membrane by sanding with 60-grit sandpaper.

2. **Metal Primer Application**:

   a. All metal surfaces must be prepared using a grinder. Do not use a wire brush. Ensure that all metal surfaces are ground down to expose bare metal.

   b. Use membrane cleaner to wipe clean.

   c. Remove bag from the aluminum packaging. Knead cream-colored resin (Component A) thoroughly until a uniform color is achieved.

   d. Pull away the rubber cord separating the two components so that Components A and B can be mixed together. Knead the bag quickly and thoroughly for approximately 1 minute so that a homogenous primer is formed. The primer should be a uniform color, with no light or dark streaks present.

   e. After the primer is mixed, cut off one corner of the bag and pour all primer into a clean, new mixing pail. Working quickly, apply approximately 25 square feet (2.3 square meters) per 0.25 gallon (0.9 l) sachet. The primer should be rolled or brushed evenly onto the surface in a cross-directional method to fully cover the substrate in one application. Allow to set for approximately 3 hours or until fully cured prior to application of the LIQUISEAL Liquid Flashing Resin.

      Note: LIQUISEAL Liquid Flashing Resin must be applied when the primer is completely dry and without tack. Do not apply LIQUISEAL Liquid Flashing Resin to tacky or wet primer.

3. **Concrete & Masonry Primer Application**:

   a. Prepare all substrates by removing any irregularities and any loose or foreign materials such as dirt, water, grease, oil, lacquers, or release agents using a grinder. All concrete substrates should be dry and fully cured.

   b. Remove bag from the aluminum packaging. Knead translucent yellow resin (Component A) thoroughly until a uniform color is achieved.

   c. Pull away the rubber cord separating the two components so that Components A and B can be mixed together. Knead the bag quickly and thoroughly for approximately 1 minute so that a homogenous primer is formed. The primer should be a uniform color, with no light or dark streaks present.

d. After the primer is mixed, cut off one corner of the bag and pour all primer into a clean, new mixing pail. Working quickly, apply at a rate of approximately 19 square feet (1.76 square meters) per 0.25 gallon (0.9 l) sachet. The primer should be rolled or brushed evenly onto the surface in a cross directional method to fully cover the substrate in one application.

e. After applying the primer, immediately broadcast LIQUISEAL Liquid Flashing Concrete & Masonry Preparation Sand into the uncured primer at the approximate rate of 50 lbs (22.6 kg) per 100 square feet (9.29 square meters). Allow to set for approximately 4 hours or until fully cured prior to application of the LIQUISEAL Liquid Flashing Resin.

f. In warm climates, higher contents of moisture or vapor within a concrete substrate may cause pin-holing of the primer due to vapor drive. Applying primer later in the day when temperatures are lower can improve this condition.

Note: LIQUISEAL Liquid Flashing Resin must be applied when the primer is completely dry and without tack. Do not apply LIQUISEAL Liquid Flashing Resin to tacky or wet primer.

4. **LIQUISEAL Liquid Flashing Application**:

a. Apply the appropriate primer to membrane and allow to flash off. Apply appropriate primer to all other surfaces to which flashing will be applied.

b. Cut and prepare all reinforcing fleece before mixing resin.

i. For LIQUISEAL Resin in 1.03 gallon (3.9 l) Pail Packaging

1. Mix resin (Component A) with a clean spiral agitator until the liquid is a uniform white or gray color.
2. Add hardener (Component B) to Component A and mix with a spiral agitator for 2 minutes or until both liquids are thoroughly blended.

ii. For LIQUISEAL in 0.25 gallon (0.9 l) Sachet Packaging

1. Remove bag from the aluminum packaging.
2. Knead white or gray resin (Component A) thoroughly until a uniform color is achieved.
3. Pull away the rubber cord separating the two components so that Components A and B can be mixed together. Knead the bag quickly and thoroughly for approximately 1 minute so that a homogenous resin is formed. The resin should be a uniform color, with no light or dark streaks present.
4. After the resin is mixed, cut off one corner of the bag and pour entire sachet of resin into a clean, new mixing pail. Working quickly, apply at a rate of approximately 13.6 square feet (1.3 square meter) per gallon (3.8 l).

c. Using a nap roller or brush, apply two-thirds of the resin evenly onto the substrate using even strokes.

d. Roll the LIQUISEAL Liquid Flashing Fleece directly into the LIQUISEAL Liquid Flashing Resin, ensuring that the SMOOTH SIDE IS FACING UP (natural unrolling procedure) and avoiding folds, wrinkles, and air pockets.

e. Apply the remaining one-third of the resin and use the roller or brush to work the resin into the fleece, saturating from the bottom up. All areas of the fleece should be completely saturated with resin.

f. Repeat steps ‘b through e’ again for subsequent layers of resin and flashing as needed for detailing.

E. **Associated Installation Details**

Inspection, Cleaning & Substrate Preparation (Page 1 of 2) ..... Attachment 1
Inspection, Cleaning & Substrate Preparation (Page 2 of 2) ..... Attachment 1
Application of LiquiSeal Primer & Resin ..... Attachment 2
Sheet Metal Drip Edge or Gravel Stop Flashing LF-1.1
Single and Multiple Pipe Penetrations (Page 1 of 2) LF-8.1
Single and Multiple Pipe Penetrations (page 2 of 2) LF-8.1
EPDM Membrane Tie-in with Existing Roof over Steel Deck ..... LF-13.1 TPO
PVC Membrane Tie-in with Existing Roof over Steel Deck (Page 1 of 2) LF-13.2
TPO or PVC Membrane Tie-in with Existing Roof over Steel Deck (Page 2 of 2) LF-13.2
Membrane Tie-in with Existing Roof over Concrete Deck LF-13.3
Through-Wall Scupper LF-18.1
Steel I-Beam Flashing (Page 1 of 2) LF-30.1
Steel I-Beam Flashing (Page 2 of 2) LF-30.1

Notes:

1. The following tables provide recommendations for preparation and priming of substrates and should be used as a guideline for proper adhesion & performance.

2. The primer application rate will vary and should be adjusted depending on the substrate. See Product Data Sheets, SDS, Guide Specifications and Details for complete information regarding the suitability, application and handling of products.

	INSPECTION	EPDM	TPO	PVC / KEE HP	METAL SURFACES	MASONRY
A.1	Inspect insulation for wet conditions underneath the roof membrane. Remove & replace wet materials underneath to match in kind.	Y	Y	Y		
A.2	Ensure, membrane or roof assembly is properly secured.	Y	Y	Y		
A.3	Provide additional securement at the base of penetrations, tie–ins or angle changes per details.	Y	Y	Y		
A.4	Ensure, there is no standing water. Remove and dry the work area. Remove dust, debris and wipe the work surfaces clean. Masonry must be completely dry and sound.	Y	Y	Y	Y	Y
A.5	Verify structural integrity of metal objects. Check for broken welds or loose bolts. Verify the thickness of exposed metal after removal of finishes or rust for strength.				Y	
A.6	Ensure, there is no moisture present in the substrate.	Y	Y	Y	Y	Y
A.7	Within the work area, inspect the seams of existing membrane for proper seal.	Y	Y	Y		
A.8	Do not damage structural members, welds or remove any nuts/bolts unless approved by designer.				Y	
	CLEANING & SUBSTRATE PREPARATION	EPDM	TPO	PVC / KEE HP	METAL SURFACES	MASONRY
B.1	Use 60 grit sandpaper to rough up the top surface of the membrane.	Y	Y	Y		
B.2	Use abrasive grinding wheel (a diamond cup wheel is suggested) to expose the bare metal (do not use wire brush). Expose metal around nuts & tighten as needed. Wipe the membrane cleaner.				Y	Y
B.3	Remove dust, clean the surfaces with broom & power blower.	Y	Y	Y	Y	Y
B.4	Wipe the surfaces with Carlisle Membrane Cleaner, (Standard or Low VOC)	Y	Y	Y	Y	
B.5	Use painter's tape to contain flashing resin. Tape shall be set 1/4" to 1/2" (1–1.5cm) beyond the fleece edges.	Y	Y	Y	Y	Y
	EXISTING BITUMINUOUS ROOFING SUBSTRATES				CONCRETE & MASONRY PRIMER	
C.1	Modified Bitumen Smooth APP Surfaced.	Power wash to remove contaminants.			Y	
C.2	Modified Bitumen Smooth SBS Surfaced.					
C.3	Bituminous Roofing – Granular Surfaced.	Power wash to remove contaminants & loose grannules				
C.4	Following bituminous substrates are not acceptable: Aluminum coating, flood coat & aggregate, coal tar pitch roofing – flood coat & aggregate, hot–melt bituminuous waterproofing & ethylene–faced bituminous (bituthane) roofing.					

© 2024 Carlisle SynTec a division of Carlisle Construction Materials Incorporated

METAL SUBSTRATES			METAL PRIMER
D.1	Bare aluminum, lead, copper & zinc.	Grind to remove corrosion, then use membrane cleaner to wipe and clean.	Y
D.2	Bare steel, galvanized steel.		
D.3	Black pipe, cast iron.	Grind to remove corrosion and coating. Then use membrane cleaner to wipe and clean.	Y
D.4	Stainless steel.	Grind to achieve rough surface. Then use membrane cleaner to wipe and clean.	Y
D.5	Kynar finish, ceramic coated, and painted metal.	Grind to remove coating. Then use membrane cleaner to wipe and clean.	Y
CEMENTITIOUS AND MASONRY SUBSTRATES			MASONRY PRIMER
E.1	Structural & or lightweight structural concrete.	Scarify, shot blast or grind to remove laitance and open up pores	Y
E.2	Granite, Marble.	Scarify, shot blast, grind to remove polished surface and open up pores	Y
E.3	Clay brick, terra cotta, tile.	Scarify, shot blast, grind to remove glazed surface and open up pores.	Y
E.4	Sandstone, limestone, synthetic stone.	Scarify, shot blast, grind to open up pores	Y
E.5	Porous/air–entrained concrete, concrete masonry block.		
E.6	Repair & leveling mortars.		
GLASS & PLASTIC SUBSTRATES			METAL PRIMER
F.1	Glass.	Sand to abrade surface. Then use membrane cleaner to wipe and clean.	Y
F.2	Acrylic.		
F.3	Fiberglass.		
F.4	ABS, PVC – Rigid.		

Note: Contact Carlisle SynTec for substrate not listed in these tables.

CAUTION:
All substrates must be prepared as necessary prior to the application of primers. Surfaces must be free from irregularities, loose, unsound or foreign materials such as rust, dirt, ice, snow, water, grease, oil, release agents, paint, lacquers, coatings, or any other conditions that would be detrimental to adhesion of the primer and resin.

© 2024 Carlisle SynTec a division of Carlisle Construction Materials Incorporated

LIQUISEAL PRIMER & RESIN APPLICATION		EPDM	TPO	PVC / KEE HP	METAL SURFACES	MASONRY
G.1	Ensure all surfaces are ready for application of primer prior to mixing, due to limited pot life.	Y	Y		Y	Y
G.2	Mix primer thoroughly, per specifications.	Y	Y		Y	Y
G.3	Apply LIQUISEAL Metal Primer per specifications.	Y			Y	
G.4	Masonry: Apply LIQUISEAL Concrete & Masonry Primer and surfacing sand per specifications.					Y
G.5	Wait for primer to cure per written instructions.	Y			Y	Y
G.6	Apply Low VOC Primer and allow to flash off completely.		Y			
G.7	Cut & dry–fit all fleece prior to mixing resin. Ensure, the fleece is set back from painter's tape, per B.5.	Y	Y	Y	Y	Y
G.8	Mix LIQUISEAL Flashing Resin thoroughly (with spiral agitator if in pail).	Y	Y	Y	Y	Y
G.9	Apply a base layer of LIQUISEAL Flashing Resin ensuring generous coverage of entire substrate.	Y	Y	Y	Y	Y
G.10	Immediately press LIQUISEAL Flashing Fleece into the applied LIQUISEAL Flashing Resin. taking care at corners and crevices.	Y	Y	Y	Y	Y
G.11	Apply a 2nd (top coat) of LIQUISEAL Flashing Resin ensuring the fleece is completely saturated per published coverage rate.	Y	Y	Y	Y	Y

© 2024 Carlisle SynTec a division of Carlisle Construction Materials Incorporated

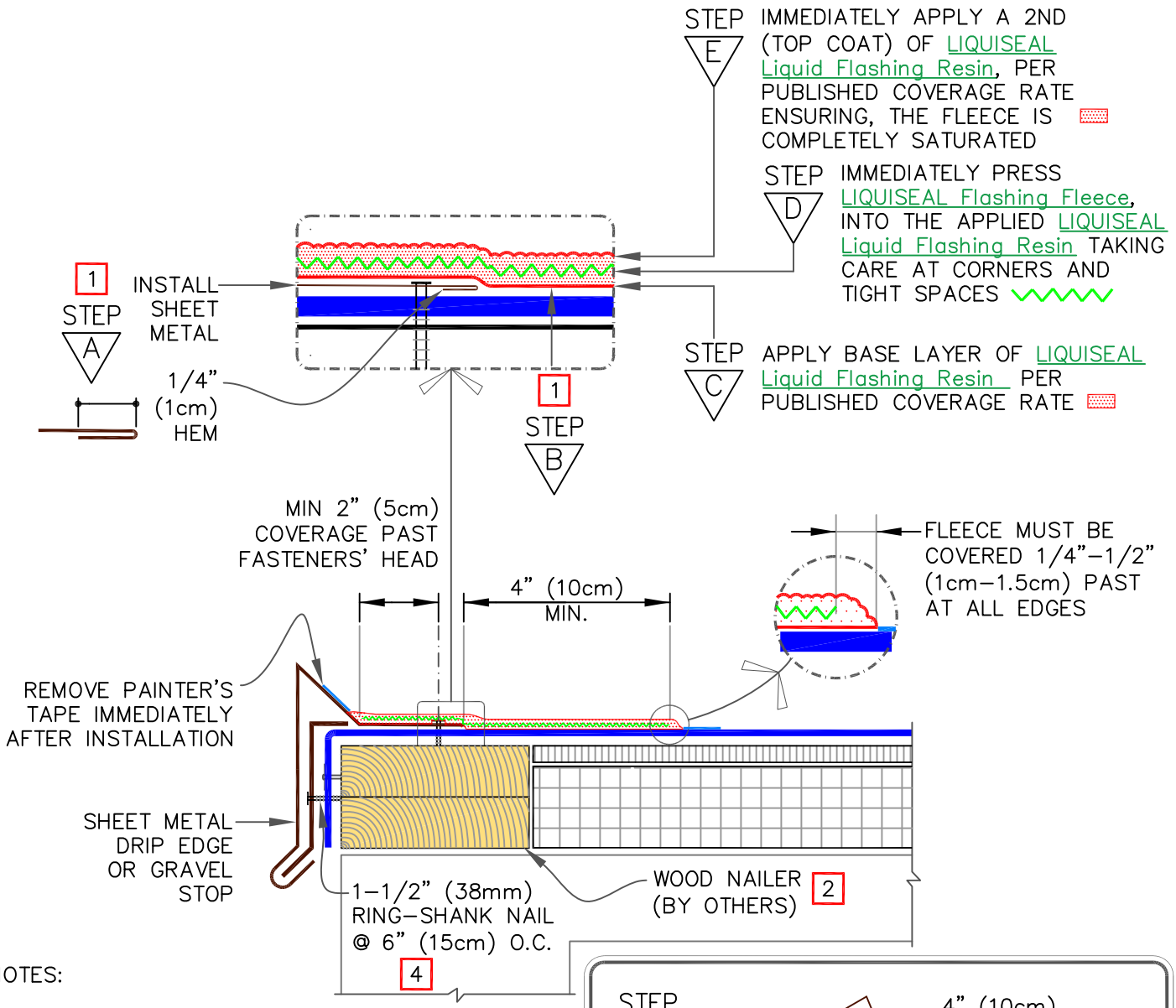

NOTES:

1. REFER TO TABLES ON SHEETS ATTACHMENT 1–2 FOR DETAILED INSPECTION, CLEANING AND PRIMING FOR DIFFERENT MATERIALS WITHIN THE FLASHING AREAS.
2. WOOD NAILER MUST EXTEND PAST TOTAL WIDTH OF SHEET METAL FLANGE.
3. SAME DETAIL APPLIES AT THE TOP OF PARAPET WALL, WHERE FULL COPING IS NOT USED.
4. FASTENERS MUST BE SECURED INTO STRUCTURAL MEMBERS, E.G., CONCRETE, SOLID MASONRY OR WOOD BLOCKING.
5. DETAIL NOT FOR USE ON WARRANTY PROJECTS EXCEEDING 20–YEARS. UNLESS OTHERWISE SPECIFIED.

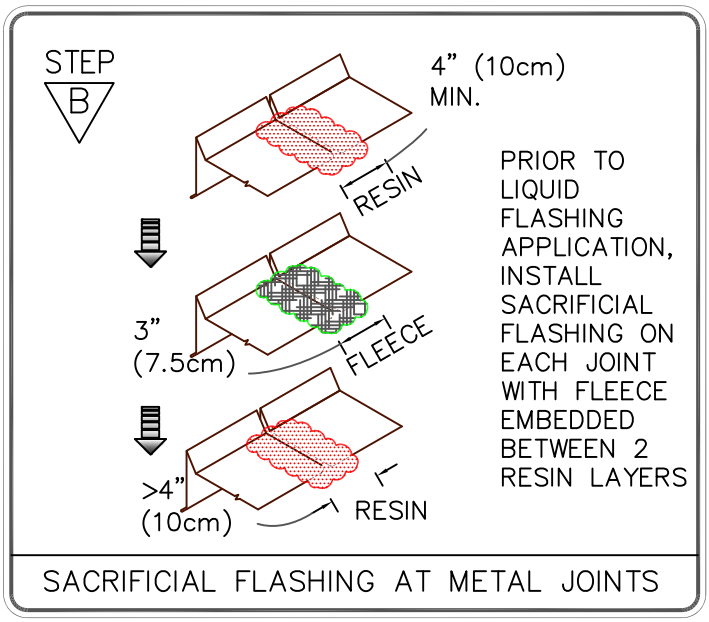

SACRIFICIAL FLASHING AT METAL JOINTS

ROOF MEMBRANE LIQUISEAL Flashing Fleece LIQUISEAL Liquid Flashing Resin 0 SEE NOTE(S)	SHEET METAL DRIP EDGE OR GRAVEL STOP FLASHING For additional information, refer to Specifications	DETAIL NO. LF–1.1 LIQUID FLASHING

© 2024 Carlisle SynTec a division of Carlisle Construction Materials Incorporated

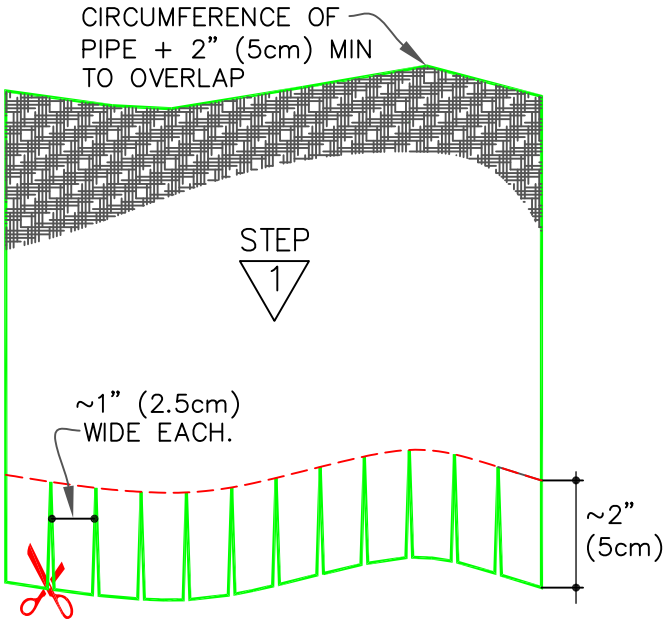

MAKE FINGER CUTS AS DEPICTED, APPROXIMATELY ONE INCH WIDE EACH

APPLY BASE COAT OF LIQUISEAL Liquid Flashing Resin PER PUBLISHED COVERAGE RATE

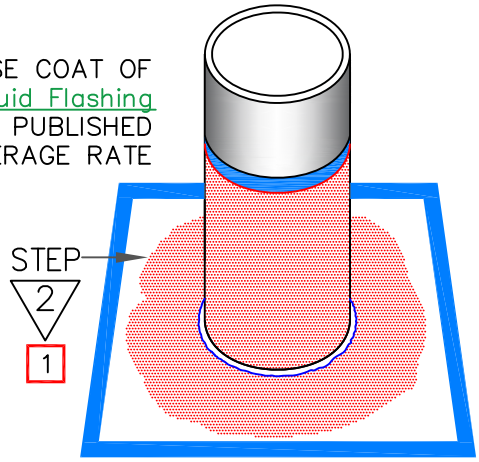

APPLY BASE COAT OF LIQUISEAL Liquid Flashing Resin ON HORIZONTAL SURFACES. IMMEDIATELY PRESS FLEECE INTO RESIN AND OVERLAP LIQUISEAL Flashing Fleece, MIN. 2" (5cm)

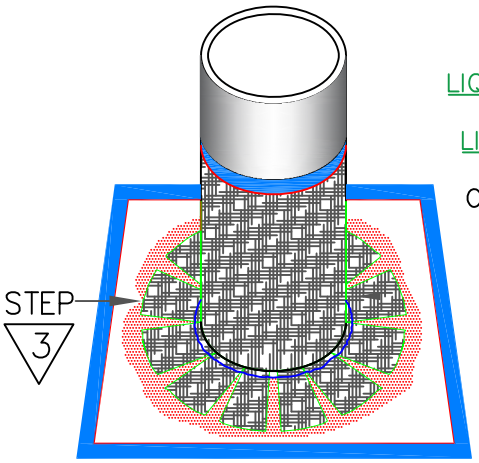

IMMEDIATELY PRESS LIQUISEAL Flashing Fleece, INTO THE APPLIED LIQUISEAL Liquid Flashing Resin. APPLY SECOND COAT OF RESIN. ENSURE ALL ENDS OF FINGERS ARE PROPERLY EMBEDDED.

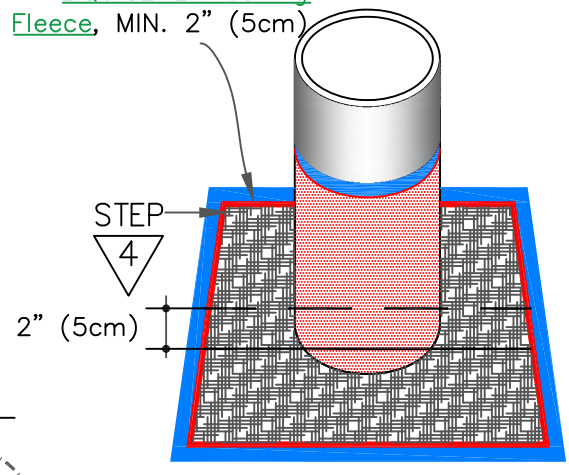

FLEECE MUST BE COVERED 1/4"– 1/2" (1cm–1.5cm) PAST ALL EDGES

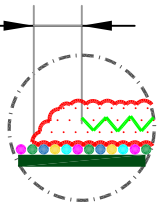

NOTES:

1. FOR MULTIPLE PIPE PENETRATIONS SEE STEP ZERO ON SHEET LF–8.1 (PAGE 2 OF 2) AND FOLLOW REST OF THE STEPS AS SHOWN FOR SINGLE PIPE FLASHING.
2. REFER TO TABLES ON SHEETS ATTACHMENT 1–2 FOR DETAILED INSPECTION, CLEANING AND PRIMING FOR DIFFERENT MATERIALS WITHIN THE FLASHING AREAS.
3. SEE PAGE 2 OF 2 FOR ADDITIONAL NOTES.

APPLY A TOP COAT OF LIQUISEAL Liquid Flashing Resin, ENSURING THE FLEECE IS COMPLETELY SATURATED PER PUBLISHED COVERAGE RATE AND APPLY 1/4"–1/2" (1cm–1.5cm) BEYOND THE FLEECE EDGES

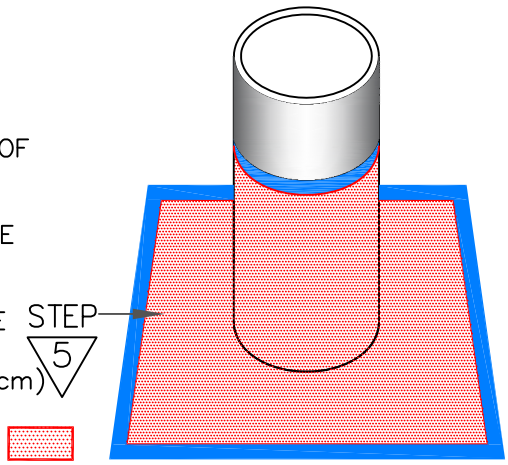

ROOF MEMBRANE LIQUISEAL Flashing Fleece LIQUISEAL Liquid Flashing Resin 0 SEE NOTE(S)	SINGLE OR MULTIPLE PIPE PENETRATIONS (PAGE 1 OF 2) For additional information, refer to Specifications		DETAIL NO. LF–8.1 LIQUID FLASHING

© 2024 Carlisle SynTec a division of Carlisle Construction Materials Incorporated

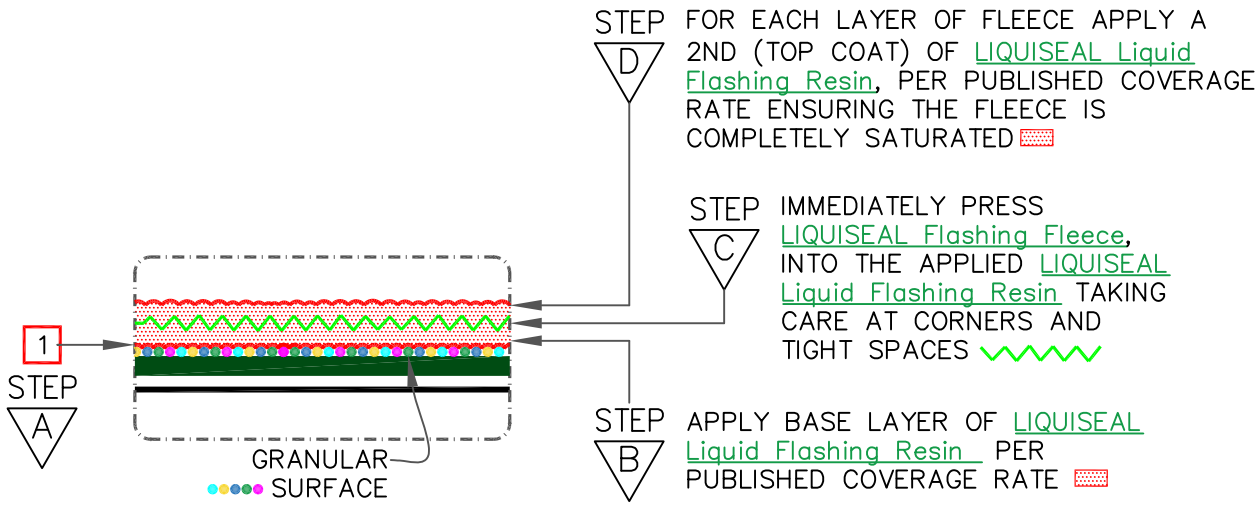

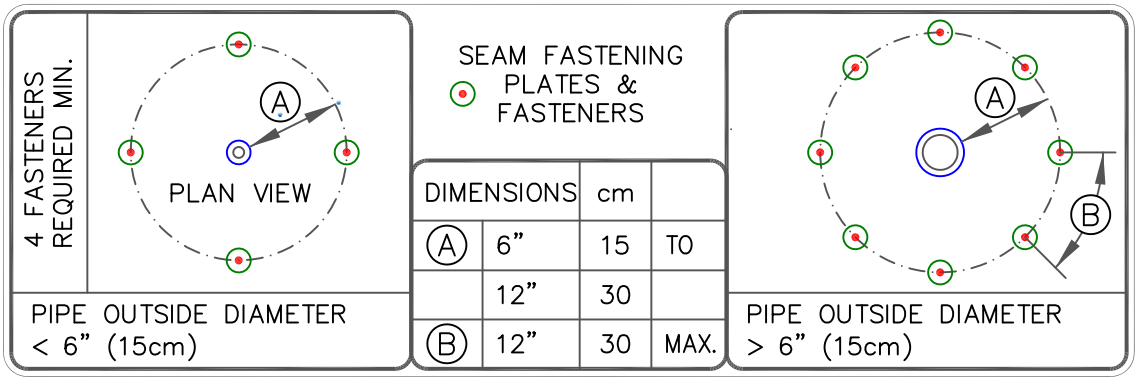

DIMENSIONS		cm	
A	6"	15	TO
	12"	30	
B	12"	30	MAX.

TABLE FOR FASTENER REQUIREMENTS ON MECHANICALLY FASTENED SYSTEMS. REFER TO CARLISLE TYPICAL PENETRATION DETAILS FOR FLASHING OVER FASTENER HEADS.

NOTES CONTINUE FROM LF-8.1 (PAGE 1 OF 2

4. WHEN THERE IS ENOUGH CLEARANCE BETWEEN MULTIPLE PENETRATIONS, INSTALL LIQUID FLASHING USING THIS DETAIL.

5. WHEN INSTALLATION OF LIQUID FLASHING IS NOT FEASIBLE FOR MULTIPLE PIPE PENETRATIONS, THEN USE APPLICABLE STANDARD ROOF MEMBRANE DETAIL (U-16) FOR FIELD MEMBRANE TYPE.

6. DETAIL NOT FOR USE ON WARRANTY PROJECTS EXCEEDING 20-YEARS. UNLESS OTHERWISE SPECIFIED.

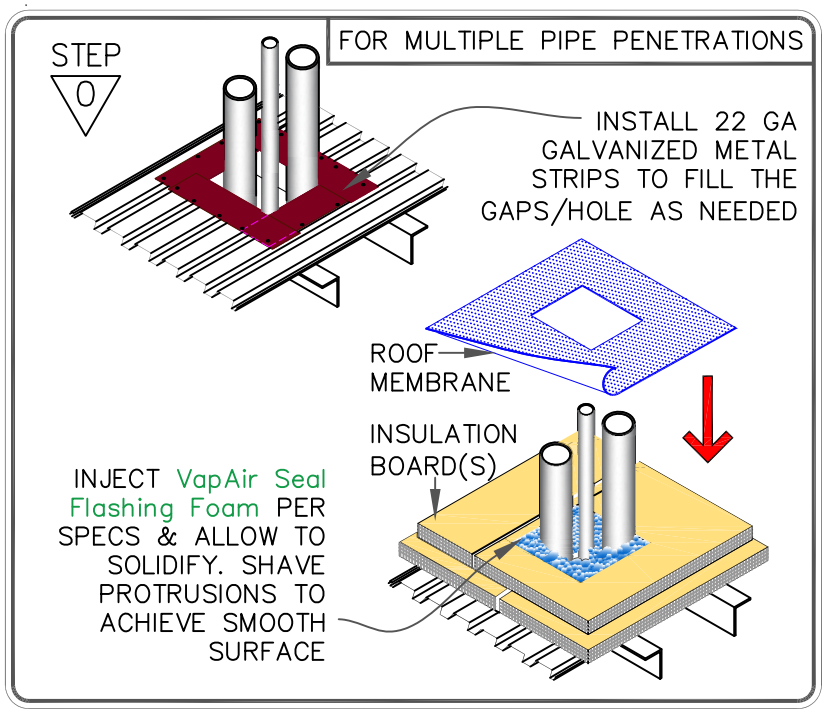

ROOF MEMBRANE	
LIQUISEAL Flashing Fleece	
LIQUISEAL Liquid Flashing Resin	
0	SEE NOTE(S)

SINGLE OR MULTIPLE PIPE PENETRATIONS (PAGE 2 OF 2)

For additional information, refer to Specifications

DETAIL NO.

LF-8.1

LIQUID FLASHING

© 2024 Carlisle SynTec a division of Carlisle Construction Materials Incorporated

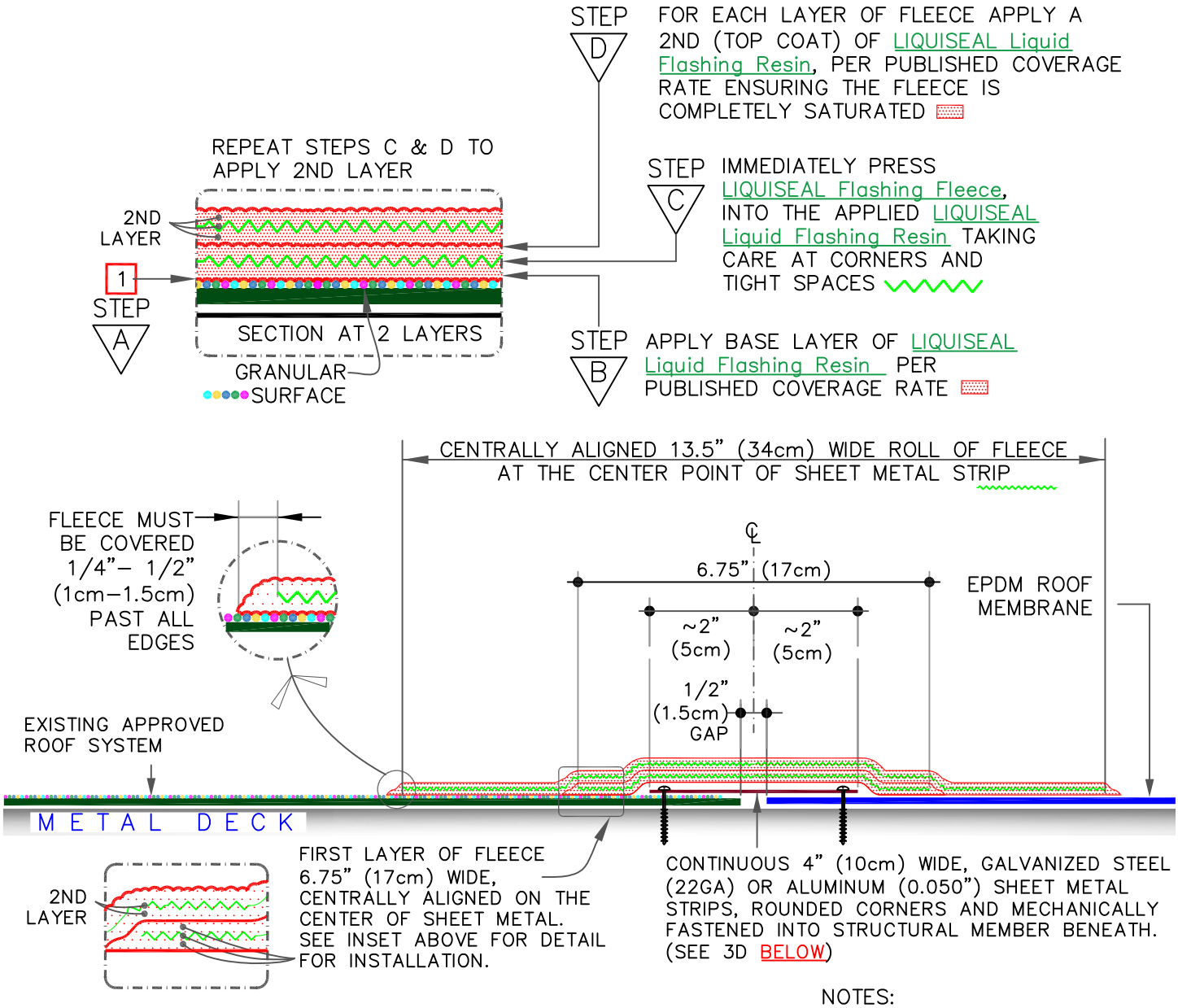

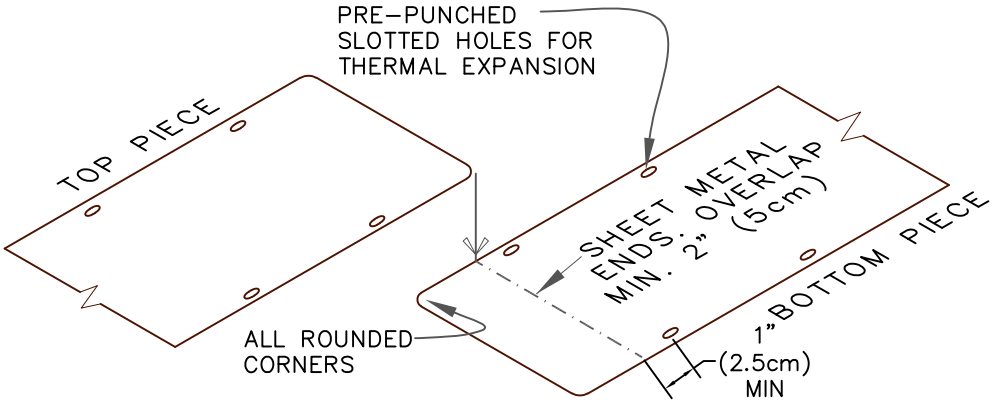

NOTES:

1. REFER TO TABLES ON SHEETS ATTACHMENT 1–2 FOR DETAILED INSPECTION, CLEANING AND PRIMING FOR DIFFERENT MATERIALS WITHIN THE FLASHING AREAS.
2. IF FLUTES ARE PERPENDICULAR DRILL A 3/8"(1cm) WEEP HOLE IN THE BOTTOM FLUTES OF THE STEEL DECK ALONG THE TIE IN.
3. DETAIL NOT FOR USE ON WARRANTY PROJECTS EXCEEDING 20–YEARS. UNLESS OTHERWISE SPECIFIED.

ROOF MEMBRANE LIQUISEAL Flashing Fleece LIQUISEAL Liquid Flashing Resin 0 SEE NOTE(S)	EPDM MEMBRANE TIE–IN WITH EXISTING ROOF OVER STEEL DECK For additional information, refer to Specifications	LIQUID FLASHING	DETAIL NO. LF–13.1

© 2023 Carlisle SynTec a division of Carlisle Construction Materials Incorporated

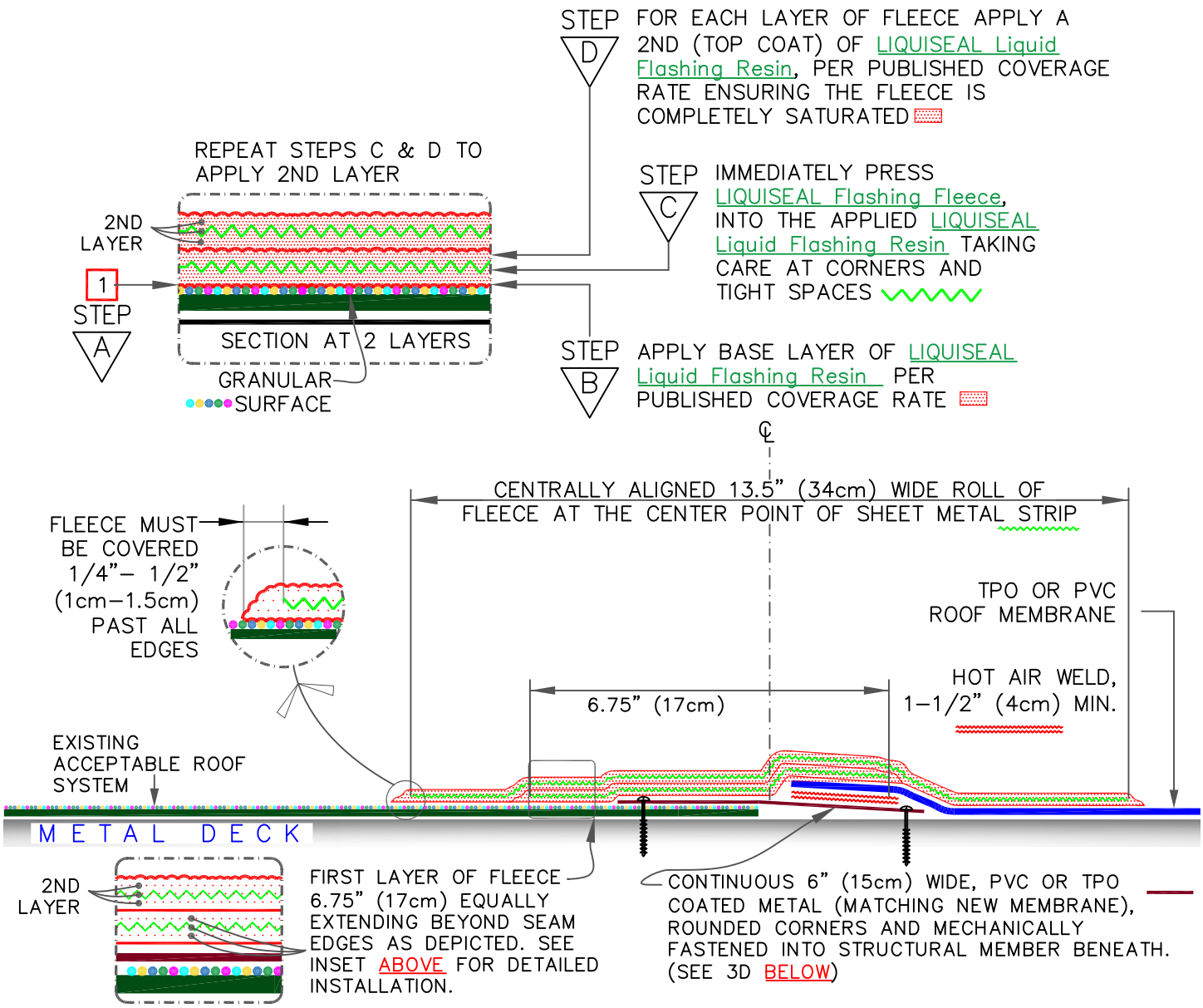

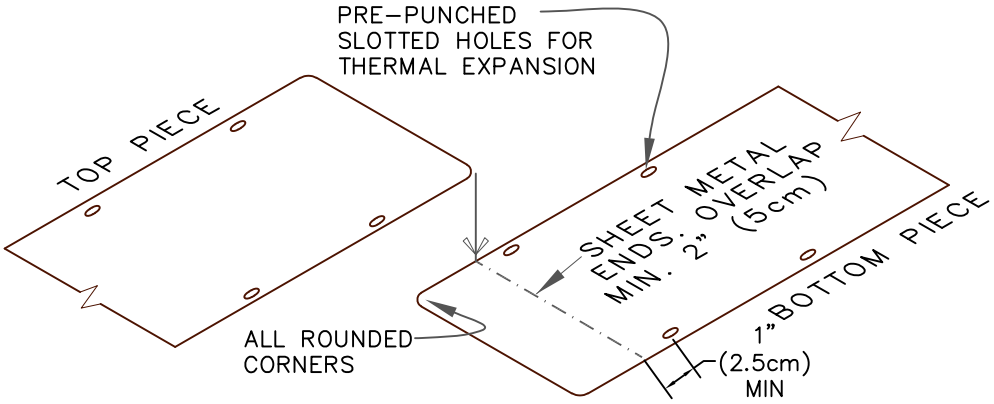

NOTES:

1. REFER TO TABLES ON SHEETS ATTACHMENT 1–2 FOR DETAILED INSPECTION, CLEANING AND PRIMING FOR DIFFERENT MATERIALS WITHIN THE FLASHING AREAS.
2. IF FLUTES ARE PERPENDICULAR DRILL A 3/8" (1cm) WEEP HOLE IN THE BOTTOM FLUTES OF THE STEEL DECK ALONG THE TIE IN.
3. DETAIL NOT FOR USE ON WARRANTY PROJECTS EXCEEDING 20–YEARS. UNLESS OTHERWISE SPECIFIED.

ROOF MEMBRANE LIQUISEAL Flashing Fleece LIQUISEAL Liquid Flashing Resin 0 SEE NOTE(S)	TPO OR PVC MEMBRANE TIE–IN WITH EXISTING ROOF OVER STEEL DECK (PAGE 1 OF 2) For additional information, refer to Specifications	DETAIL NO. LF–13.2 LIQUID FLASHING

© 2023 Carlisle SynTec a division of Carlisle Construction Materials Incorporated

A

INSTALL COATED SHEET METAL STRIPS WITH THREADED FASTENERS. REFER TO TABLES ON SHEETS ATTACHMENT 1–2 FOR DETAILED INSPECTION, CLEANING AND PRIMING FOR DIFFERENT MATERIALS WITHIN THE FLASHING AREAS.

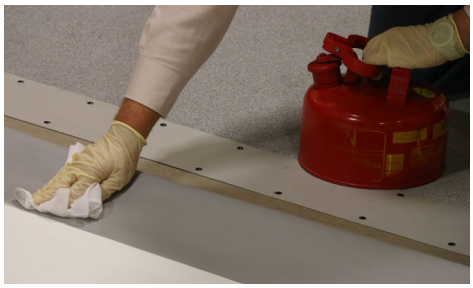

B

PROPERLY CLEAN WITH MEMBRANE CLEANER PRIOR TO WELDING.

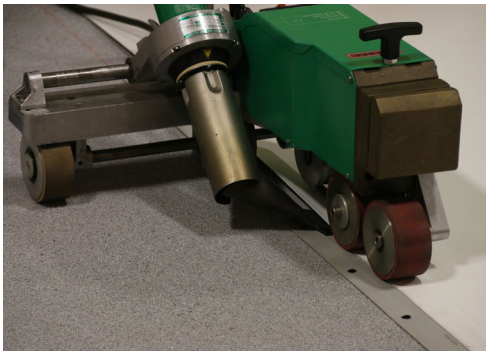

C

WELD TPO OR PVC MEMBRANE TO COATED METAL STRIP.

D

USE SAND PAPER GRIT # 60 TO ABRADE THE AREAS TO WHICH THE LIQUISEAL LIQUID FLASHING RESIN WILL BE APPLIED.

E

THOROUGHLY CLEAN THE TIE–IN AREA.

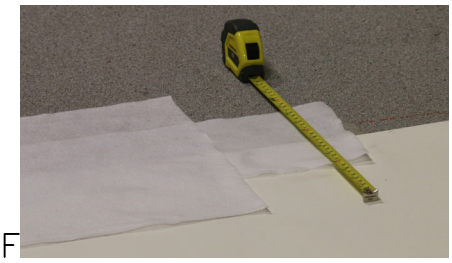

F

CUT TWO PIECES OF LIQUISEAL Flashing Fleece, (FOR DIMENSIONS SEE LF–13.2A).

G

APPLY PAINTER'S TAPE ALONG TIE–IN EDGE.

H

THOROUGHLY MIX THE RESIN, PER PUBLISHED INSTRUCTIONS.

I

INSTALL BOTH LAYERS OF PRE–CUT LIQUISEAL Flashing Fleece, EMBEDDED IN RESIN (SEE LF–13.2A).

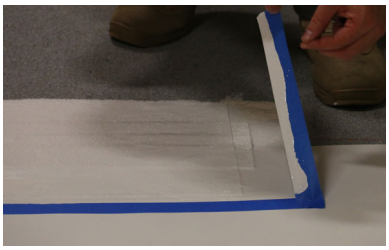

J

REMOVE TAPE IMMEDIATELY ENSURING THAT RESIN EXTENDS 1/4" – 1/2" BEYOND EDGE OF FLEECE.

ROOF MEMBRANE LIQUISEAL Flashing Fleece LIQUISEAL Liquid Flashing Resin 0 SEE NOTE(S)	TPO OR PVC MEMBRANE TIE–IN WITH EXISTING ROOF OVER STEEL DECK (PAGE 2 OF 2) For additional information, refer to Specifications	DETAIL NO. LF–13.2 LIQUID FLASHING

© 2023 Carlisle SynTec a division of Carlisle Construction Materials Incorporated

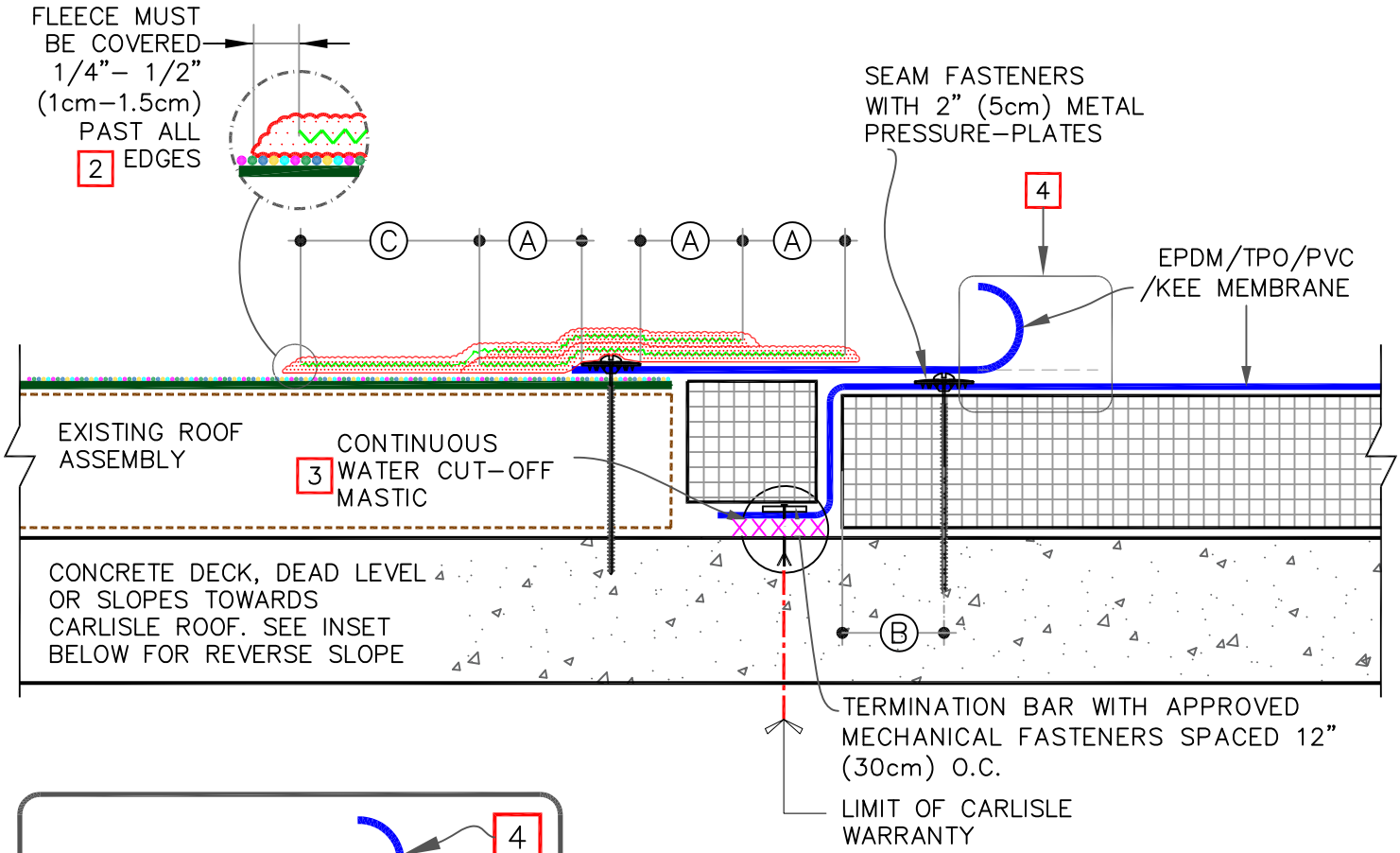

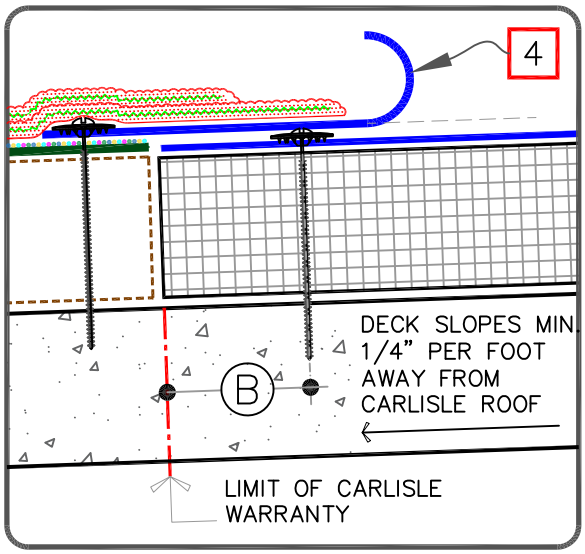

DIMENSIONS		cm	
A	3"	7.5	MIN.
B	2–3"	5–7.5	MIN.
C	AS REQUIRED DEPENDING ON SUBSTRATE, BUT MIN. 4" (10cm).		

NOTES:

1. REFER TO TABLES ON SHEETS ATTACHMENT 1–2 FOR DETAILED INSPECTION, CLEANING AND PRIMING FOR DIFFERENT MATERIALS WITHIN THE FLASHING AREAS.
2. DETAIL NOT FOR USE ON WARRANTY PROJECTS EXCEEDING 20–YEARS. UNLESS OTHERWISE SPECIFIED.
3. PROPERLY FILL THE JOINTS, VOIDS AND CRACKS ENSURING PROPER SEAL AGAINST WATER MIGRATION.
4. APPLICABLE SEAM DETAILS:
   - 4.1. EPDM: U–2A & U–2A.1
   - 4.2. TPO/PVC/KEE: U–2A

ROOF MEMBRANE
LIQUISEAL Flashing Fleece
LIQUISEAL Liquid Flashing Resin
0 SEE NOTE(S)

MEMBRANE TIE–IN WITH EXISTING ROOF OVER CONCRETE DECK

For additional information, refer to Specifications

DETAIL NO.
LF–13.3
LIQUID FLASHING

© 2024 Carlisle SynTec a division of Carlisle Construction Materials Incorporated

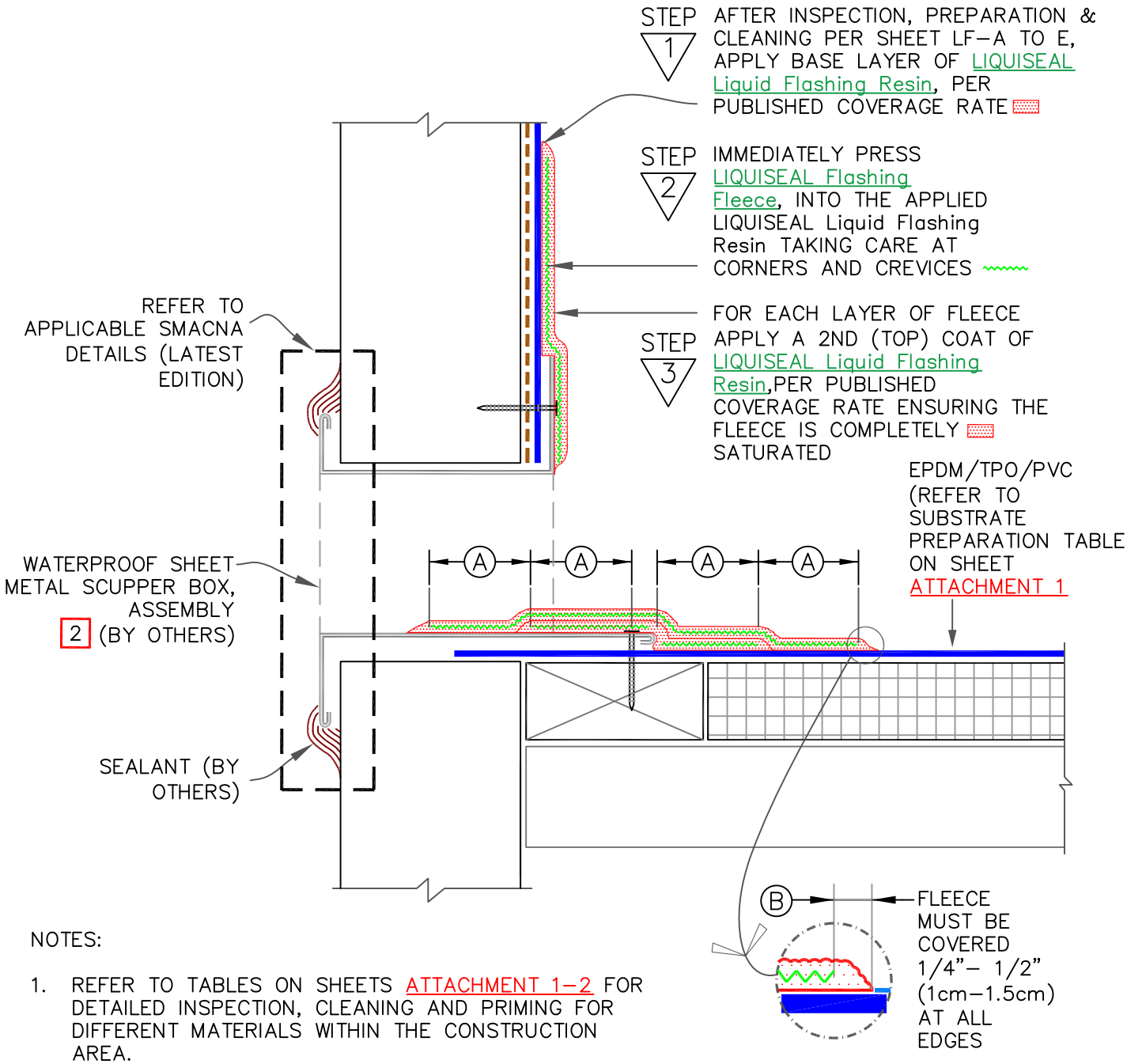

NOTES:

1. REFER TO TABLES ON SHEETS ATTACHMENT 1–2 FOR DETAILED INSPECTION, CLEANING AND PRIMING FOR DIFFERENT MATERIALS WITHIN THE CONSTRUCTION AREA.
2. WOOD NAILER MUST EXTEND PAST TOTAL WIDTH OF SHEET METAL FLANGE.
3. MECHANICAL FASTENERS MUST BE SECURED INTO STRUCTURAL CONCRETE, SOLID MASONRY OR PRESSURE TREATED WOOD BLOCKING.
4. DETAIL NOT FOR USE ON WARRANTY PROJECTS EXCEEDING 20–YEARS. UNLESS OTHERWISE SPECIFIED.

DIMENSIONS		cm	
A	3"	7.5	MIN.
B	1/4"	1	TO
	1/2"	1.5	

ROOF MEMBRANE
LIQUISEAL Flashing Fleece
LIQUISEAL Liquid Flashing Resin
0 SEE NOTE(S)

THROUGH–WALL SCUPPER

For additional information, refer to Specifications

DETAIL NO.
LF–18.1
LIQUID FLASHING

© 2024 Carlisle SynTec a division of Carlisle Construction Materials Incorporated

STEP 1

INJECT VapAir Seal Flashing Foam PER SPECS & ALLOW TO SOLIDIFY. SHAVE PROTRUSIONS TO ACHIEVE SMOOTH SURFACE

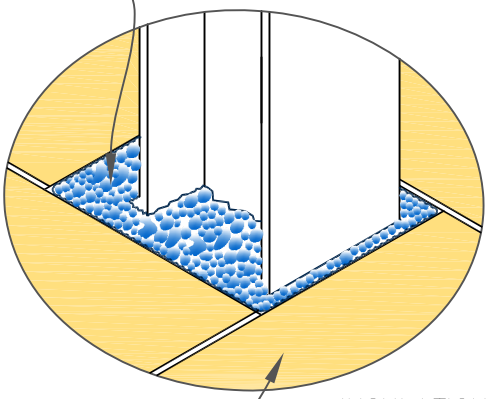

INSULATION BOARD(S)

STEP 2

GRIND METAL WITH DIAMOND CUP GRINDING WHEEL

MEMBRANE SECURED WITH PLATES & FASTENERS PER SPECS

A

NOTE:
ENSURE BODY OF PENETRATIONS & WELDS ARE COMPLETELY WATERPROOF.

B

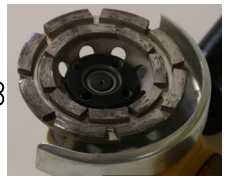

DIAMOND CUP GRINDING WHEEL

STEP 3

C

USE SAND PAPER GRIT# 60 TO ABRADE THE MEMBRANE SURFACE.

STEP 4

D

REMOVE ALL GRINDING DUST, CLEAN METAL & MEMBRANE WITH CLEAN RAGS & MEMBRANE CLEANER.

STEP 5

E

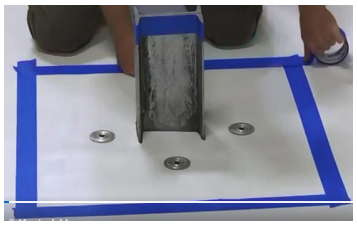

USE PAINTER'S TAPE AND TAPE OFF THE FLASHING AREA.

MEASURING, CUTTING & DRY FITTING TECHNIQUE

F

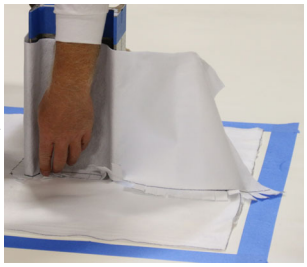

G

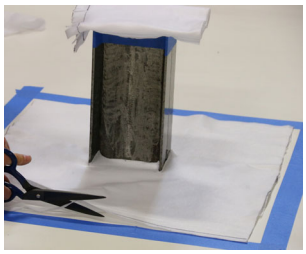

STEP 6

VERTICAL HEIGHT 6"MIN. (15cm)

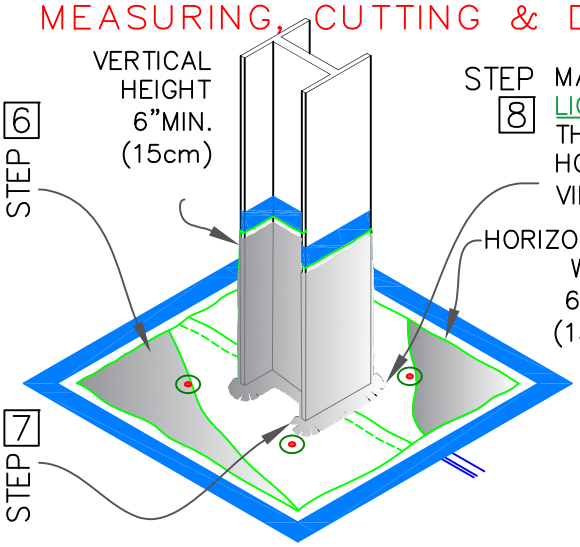

STEP 7

STEP 8 MAKE FINGER CUTS 2" (5cm) LONG IN LIQUISEAL Flashing Fleece AS SHOWN. THE FINGERS WILL REST ON THE HORIZONTAL SURFACE. SEE ENLARGED VIEW "I" ON PAGE 2 OF 2.

HORIZONTAL WIDTH 6"MIN. (15cm)

H

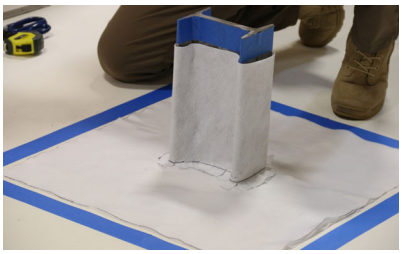

ROOF MEMBRANE LIQUISEAL Flashing Fleece LIQUISEAL Liquid Flashing Resin 0 SEE NOTE(S)	STEEL I-BEAM FLASHING (PAGE 1 OF 2) For additional information, refer to Specifications	DETAIL NO. LF-30.1 LIQUID FLASHING

© 2024 Carlisle SynTec a division of Carlisle Construction Materials Incorporated

SACHET MIXING AND PRIMER APPLICATION

I

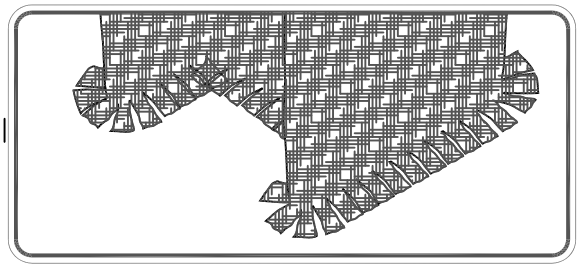

STEP 9

J

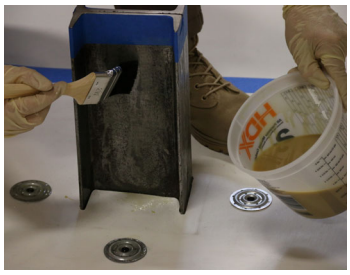

PRIME I–BEAM AND METAL PLATES. ENSURE AMBIENT AIR TEMPERATURE IS 40° & RISING. ALLOW PRIMER TO CURE UNTIL TACK–FREE.

FLASHING FINAL INSTALLATION

STEP 10

APPLY 1ST COAT OF LIQUISEAL Liquid Flashing Resin & INSTALL LIQUISEAL Flashing Fleece ON VERTICAL SURFACES.

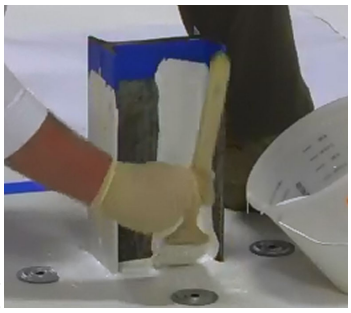

K

STEP 11

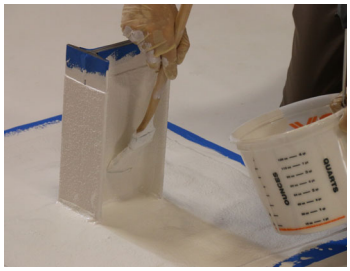

L

IMMEDIATELY APPLY A 2ND COAT OF LIQUISEAL Liquid Flashing Resin ENSURING THE FLEECE IS COMPLETELY SATURATED.

APPLY 1ST COAT OF RESIN AND INSTALL FLEECE ON HORIZONTAL SURFACES. IMMEDIATELY APPLY A 2ND COAT OF RESIN ENSURING FLEECE IS COMPLETELY SATURATED.

FLEECE MUST BE COVERED 1/4"– 1/2" (1cm– 1.5cm) BEYOND EDGES

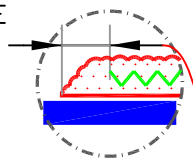

STEP 12

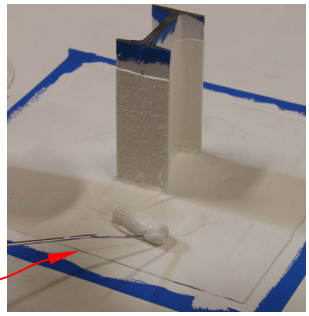

M

STEP 13

N

TOUCH UP AS NEEDED TO ENSURE ENTIRE FLEECE IS COMPLETELY SATURATED.

COMPLETED FLASHING

STEP 14

O

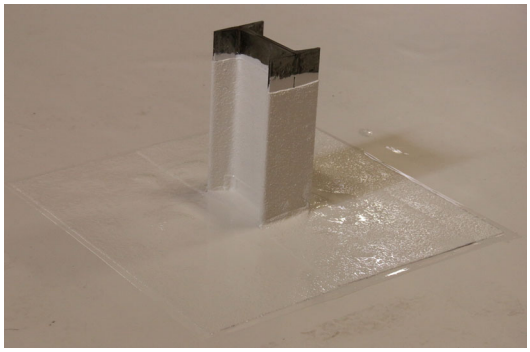

REMOVE TAPE IMMEDIATELY ENSURING THAT RESIN EXTENDS 1/4" – 1/2" (1cm – 1.5cm) BEYOND EDGE OF FLEECE

NOTE:
1. DETAIL NOT FOR USE ON WARRANTY PROJECTS EXCEEDING 20–YEARS. UNLESS OTHERWISE SPECIFIED.

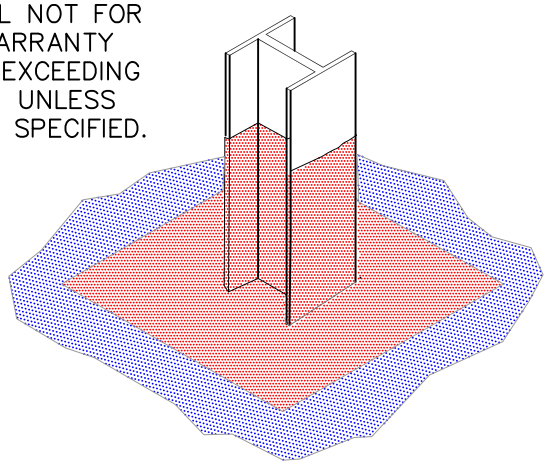

ROOF MEMBRANE LIQUISEAL Flashing Fleece LIQUISEAL Liquid Flashing Resin 0 SEE NOTE(S)	STEEL I–BEAM FLASHING (PAGE 2 OF 2) For additional information, refer to Specifications	DETAIL NO. LF–30.1 LIQUID FLASHING

© 2024 Carlisle SynTec a division of Carlisle Construction Materials Incorporated

Copyright 2024 Versico

Versico and LIQUISEAL are Trademarks of Versico

This specification represents the applicable information available at the time of its publication. Owners, specifiers and Versico authorized roofing contractors should consult Versico or their Versico Independent Sales Representative for any information, which has subsequently been made available.

Review the appropriate Versico warranty for specific warranty coverage, terms, conditions and limitations.

SPECIFICATION
SUPPLEMENT

G-12-19

Application Procedures for Versico's VapAir Seal MD Air and Vapor Barrier

January 2024

The information contained in this supplement serves as a criteria for Specifiers and Authorized Contractors regarding the design and installation of Versico Roofing Systems and related products. Additional information essential for the design and installation of the Roof Systems mentioned herein are also included in the respective Specification for each Roof System and in the Design Reference Section of the Versico Technical Manual. Specifiers and Authorized Contractors are advised to reference all applicable sections.

A. General

1. **Versico VapAir Seal MD Air and Vapor Barrier** – a reinforced composite aluminum foil with self-adhesive SBS backing and removable poly release film. Used for direct application over metal decks. Available in rolls 42.5" wide by 131.23" long (460 square feet).

2. **Versico CAV-GRIP 3V Low-VOC Adhesive/Primer:** a low-VOC, methylene chloride-free adhesive that can be used for a variety of applications including: enhancing the bond between Versico's VapAir Seal MD and various substrates. Coverage rate is approximately 2,000-2,500 sq. ft. per 40 lb cylinder and 4,000-5,000 sq. ft. per 85 lb cylinder as a primer, in a single-sided application.

3. **CCW 702 Primer and 702LV Primer (Low VOC)** - A single component, solvent based, high-tack primer used to provide maximum adhesion between Versico 725TR Air and Vapor Barrier and an approved substrate. Applied by spray or long nap roller with a coverage rating ranging from approximately 300 to 350 square feet per gallon on smooth finishes (i.e., concrete) to 75 square feet per gallon on porous surfaces (i.e., Dens-Deck Prime gypsum board). Available in 5-gallon containers. CCW 702LV Primer contains less than 250g/L VOCs and meets South Coast Air Quality Management District (SCAQMD) and Leadership in Energy and Environmental Design (LEED) Requirements for Volatile Organic Compounds.

4. **CCW 702 WB –** a high-tack, water-based contact adhesive for promoting adhesion of Versico air/vapor barrier membranes and an approved substrate (i.e., concrete, Dens-Deck Prime and Securock). Applied by roller, brush or spray with an application rate of approximately 200 sq. ft. per gallon. Available in 5-gallon containers. CCW 702 WB Primer contains 57g/L VOCs and meets South Coast Air Quality Management District (SCAQMD) and Leadership in Energy and Environmental Design (LEED) Requirements for Volatile Organic Compounds.

B. Approved Substrates

VapAir Seal MD Air and Vapor Barrier is specifically designed for direct application to fluted steel decks. It may also be used in conjunction with either Versico's CAV-GRIP 3V on vertical wall surfaces, such as structural concrete, gypsum, Securock, DensDeck Prime and plywood substrates.

VERSICO
ROOFING SYSTEMS

CAUTION: Use of standard DensDeck is not recommended due to excessive primer absorption. When the use of standard DensDeck is specified, two coats of Versico Primer will be required along with a trial test to verify adequate adhesion of the Versico's VapAir Seal MD Air and Vapor Barrier.

C. **Limitations**

1. Do not apply primer or vapor barrier to frozen substrates. Best results are obtained when temperatures are above 40°F (4°C).

2. Versico's VapAir Seal MD Air and Vapor Barrier may be installed in temperatures as low as 10°F (-12°C) based on the following criteria:

   a. All materials (Vapor Barrier and Primer) must be stored in temperatures above 60°F (15°C) prior to installation.

   b. For best results, CAV-GRIP 3V primer should be applied to the metal deck to ensure proper adhesion during the roofing installation. CAV-GRIP 3V primer will allow for the shortest flash off time (approximately 5 minutes). **Note: The propellant in CAV-GRIP 3V will revert back to a liquid when the cylinder temperature falls below 45°F (7°C). If this occurs, simply warm the cylinder up above 60°F (15°C) and the propellant will revert back to a gas.**

   c. In temperatures below 40°F (4°C) priming the seams is recommended to ensure seam performance.

3. Do not apply primer or vapor barrier to damp or contaminated surfaces.

4. Versico's VapAir Seal MD Air and Vapor Barrier is not recommended for use over sealants containing coal tar or polysulfides. If these materials are present, they must be removed and the surfaces thoroughly cleaned.

D. **Installation**

1. **Surface Preparation**: The surface shall have a smooth finish and be free of voids, spalled areas, sharp protrusions, loose aggregate, laitance and form release agents. In the event of rain, concrete must be allowed to dry before primer is applied.

2. **Primer**: Non-metal surfaces to receive VapAir Seal MD must be clean and dry. Prime with CAV-GRIP 3V, CCW 702, 702LV or CCW WB Primer. Apply Primer by spray, brush or with a long nap roller at the applicable coverage rate noted above. At 75°F allow 702, 702LV and 702WB primer to dry 75 minutes minimum. Primer has a satisfactory cure when it will not transfer when touched. Prime only areas to be waterproofed the same day. At 75°F allow CAV-GRIP 3V primer to dry approximately 5 minutes minimum. Re-prime if area becomes dirty.

3. **Application**: Apply VapAir Seal MD Air and Vapor Barrier to the metal deck from low to high point, in a shingle fashion, so that laps will shed water. Overlap all edges at lease 2-1/2". End laps shall be staggered. Place either a 6" wide section of 24 gauge sheet metal or a 6" wide section of VapAir Seal MD directly on the metal under each end lap, perpendicular to the end lap, to ensure a solid surface to roll the end lap together. Seams and end laps must be rolled with a 2" seam roller or stand-up seam roller. Place membrane carefully so as to avoid wrinkles and fish mouths. Immediately after installation, broom the sheet to ensure proper contact to the metal.

   a. Apply a bead of lap seal should be applied at the interior of all T-Joint intersection. Please refer to applicable Versico Details.

4. **Repairs**: Following application, inspect VapAir Seal MD membrane for tears, punctures, fish mouths, air bubbles and voids due to misalignment at seams. Remove damaged membrane. Prime exposed substrate and allow primer to dry. Apply a new section of VapAir Seal MD Air and Vapor Barrier to primed substrate, extending onto adhered membrane, 6" on all sides. With a seam roller; roll VapAir Seal MD repair section to ensure a proper seal. Slit fish mouths and overlap the edges.

5. **Insulation Installation**: Ensure surface of VapAir Seal MD Air and Vapor Barrier is dry prior to installing insulation. Place insulation over the surface and mechanically fasten to the roof deck accordance with this Versico Specification.

6. **Installation at angle changes**: To ensure proper installation, the vertical wall must me clean of debris and residual asphalt. Prime the vertical surface ensuring the primer extends a minimum of 2” above where the VapAir Seal MD meets the vertical wall. After installing the VapAir Seal MD, use a seam roller on the vertical surface to ensure contact to the wall. There are two options for applying the MD to the vertical surface:

   a. Option One: Apply the VapAir Seal MD up the vertical surface to the height of the insulation or a minimum of 2”.

   b. Option Two: Apply the VapAir Seal MD over the entire vertical surface ensuring the membrane extends over the top of the vertical surface and ties into exterior wall air barrier when applicable. Refer to applicable Versico details.

      Note: When utilizing option 2, mechanically fastened 1/2” SecurShield HD board, 1/2” SecurShield HD Plus board, 1/2” DensDeck, 1/2” Securock or 1/2” plywood over the VapAir Seal MD surface to ensure a solid substrate to adhere the roofing membrane.

7. **Angle Change**: The VapAir Seal MD should be applied to the vertical surface at a 90° angle and be adhered to a firm substrate. When a gap is present between the metal deck and the vertical surface, loose lay a 6” wide section of 24 gauge sheet metal at the angle change to ensure a solid surface for adhering the membrane. When the gap between the metal deck and vertical substrate is greater than 2”, install a section of insulation to fill in the gap prior to loose laying the 6” wide section of sheet metal.

8. **Details:** Proper details ensure the integrity of the Air and Vapor Barrier. Details must be completed using the following materials: VapAir Seal MD material, Pressure-Sensitive ElastoForm Flashing and VapAir Seal Foam Flashing. Please refer to applicable Versico details for penetrations and ties-ins.

Copyright 2024 Versico

Versico and VersiFleece are Trademarks of Versico

This specification represents the applicable information available at the time of its publication. Owners, specifiers and Versico authorized roofing contractors should consult Versico or their Versico Independent Sales Representative for any information, which has subsequently been made available.

Review the appropriate Versico warranty for specific warranty coverage, terms, conditions and limitations.

SPECIFICATION SUPPLEMENT

G-13-23

VacuSeal™ Vent Secured Roofing Systems

January 2024

The information contained in this supplement serves as a criteria for Specifiers and Authorized Contractors regarding the design and installation of Versico Roofing Systems and use of roof vents for a vent secured roofing system. In addition to the information contained herein, attachment details are included to provide the Specifiers and Authorized Contractors with quick access to specific information. Specifiers and Authorized Contractors are advised to reference all applicable details included with this spec supplement.

This alternate method with vent securement is for securing Versico's VersiGard/VersiGard White (EPDM), VersiWeld (TPO), VersiFlex (PVC) or VersiFlex (KEE HP) membrane and is intended to be used with products included within the Versico's Thermoset or Thermoplastic Specification and Details.

A. Description

The VacuSeal™ Vent Secured Roofing System incorporates the use of a loose-laid thermoset or thermoplastic membranes in conjunction with a sealed roofing/substrate assembly and VacuSeal Roof Vents. The roof vents locations are pre-determined by engineered drawings processed through Versico, based on project location and conditions. Air distribution strips are positioned beneath the membrane linking the VacuSeal Vents and facilitating air movement beneath the membrane. The insulation is loose-laid in a single or multiple layers and overlaid with a 1/2 inch gypsum cover board.

NOTE: A continuous air seal is critical for performance of the system, closely follow details at perimeters and penetrations.

VacuSeal Vent Secured Roofing System is limited to 20 Year Maximum warranty with wind speed coverage up to 90 mph. Specific enhancements will be required along the perimeter for systems requiring warranty wind speed coverage greater than 72 mph. Contact Versico for enhancement requirements.

VacuSeal™ Membrane Systems Warranty Options

Years	Thermoset (VersiGard/VersiGard White EPDM) OR Thermoplastic Membranes (VersiWeld TPO/VersiFlex PVC/VersiFlex KEE HP)		
	Warranty Wind Speed 55, 72, 80 or 90 mph	Minimum Membrane Thickness (1)	Additional Puncture Coverage
5, 10, 15 or 20 year	√(2)	60-mil	Not Available

Notes: √= Acceptable

(1) All "T-Joints" must be overlaid with appropriate flashing material.
(2) Perimeter enhancements required for wind speed coverage greater than 72mph. Contact Versico for requirements.

B. Quality Assurance

1. This securement method using VacuSeal Vents requires a pre-engineered drawing developed by VacuSeal Technology identifying locations of all vents in the system and specific engineering evaluations completed by VacuSeal Technology. Prior to installation, approved engineered drawing must be obtained.

VERSICO ROOFING SYSTEMS

2. This roofing assembly must be installed by an authorized applicator who has been trained for the installation of VACUSEAL Roof Vents and its components in compliance with the approved engineered drawing.

3. Consult Versico to ensure proper seal detailing is provided and appropriate Versico roofing details are selected.

4. In addition to final inspection by Versico, project scheduling must be coordinated with Versico for in-progress inspection coordination.

C. Submittals

1. Prior to starting work, the roofing contractor must submit the following:

   a. Roofing Architectural Drawings and Details must be submitted to VACUSEAL Technology, 13000 S. Tyron St., Suite F-193, Charlotte, NC 28278, (704)-900-1220, contact@VacuSealroofsystems.com prior to installation to secure an engineered layout for the vent locations.

   b. Submit VACUSEAL engineered layout to Versico showing VACUSEAL vent layout, location of air distribution strips, details of construction and identification of materials.

2. No deviations will be allowed without prior written approval.

3. Upon completion of the installed work, submit notice of completion to Versico to schedule Final Inspection.

D. Products

Products listed in "Part II" of the Versico Thermoset/Thermoplastic Roofing System Specifications can be used as part of the VacuSeal Vent Secured Roofing System. In addition, products listed herein are specific to this system:

1. VacuSeal **Roof Vent**: A ridged injection-molded PVC plastic roof vent with integrated plastic flange base.

2. **Air Distribution Strip:** A 10" wide, orange polypropylene mesh used to distribute air underneath the membrane and VacuSeal roof vent. Available in rolls of 10" wide by 500' long.

3. **Sealant Tape:** An elastomeric butyl rubber sealant, extruded on silicone coated paper, used in conjunction with a termination bar to secure and seal compression type flashing terminations.

4. **Versico VapAir Seal 725TR Air and Vapor Barrier** - A 40-mil thick composite consisting of 35-mil self-adhering rubberized asphalt membrane laminated to a 5-mil UV resistant poly film with an anti-skid.

5. **Versico VapAir Seal MD Air and Vapor Barrier** – a reinforced composite aluminum foil with self-adhesive SBS backing and removable poly release film. Used for direct application over metal decks.

6. **Versico VapAir Seal Flashing Foam –** a low pressure foam system that utilizes a non-flammable blowing agent. The foam is used to seal penetrations and reduce air leakage, especially at roof perimeters.

7. **VersiGard/VersiGard White Quick Applied Uncured Flashing:** A 6" X 100' and 9" or 12" wide by 50' long, 60-mil thick VersiGard **uncured** EPDM Flashing laminated to a 30-mil QA Seam Tape used in conjunction with EPDM Primer. VersiGard/VersiGard White EPDM Quick Applied uncured Flashing is used to flash inside and outside corners, pipes, scuppers and field fabricated pourable sealer pockets when the use of Versico pre-fabricated flashing accessories is not feasible.

E. Design Criteria

Follow current Versico specifications for installing roof membranes and seaming per specific membrane. [VersiGard/VersiGard White (EPDM), VersiWeld (TPO), VersiFlex (PVC) or VersiFlex (KEE HP)].

1. **General**

   a. The use of a sealed air barrier for this roofing system is required and is critical to the performance and function of this system. Follow all details at perimeters and penetrations.

   b. For this air equalization attachment method, night seal must be completed by the end of each day, perimeter seals must be completed along with the required number of vents in a specific area.

2. **Re-Roof (Recover, No Tear-Off)**

a. To maintain continuous air seal, utilize existing roof membrane and replace or re-seal any flashings which are loose or damaged.

SUBSTRATE CRITERIA FOR VACUSEAL REROOF (RECOVER, NO TEAR-OFF) (1)

Acceptable Roof Deck / Substrate (1)	TPO Membrane	PVC / KEE HP PVC Membrane	EPDM Membrane
Existing Smooth Surface BUR (7) or Mineral Surface Cap Sheet	Direct Application (8) (9)	½" min. approved coverboard	Direct Application (2) (9)
Gravel Surfaced BUR (3) or Coal Tar Pitch (3) (4)	½" min. approved coverboard	½" min. approved coverboard	½" min. approved coverboard
Modified Bitumen (9)	Direct Application (6) (8)	½" min. approved coverboard	Direct Application (6) (8)
Existing Single-Ply (5)(9)	Direct Application	Direct Application	Direct Application
Sprayed-in-place Urethane	½" min. approved coverboard	½" min. approved coverboard	½" min. approved coverboard

Notes:

1) Existing roof system must be securely attached.
2) VersiGard (black) may be applied directly to the substrate provided asphalt on existing smooth surfaced built-up roof has a softening point above 185°F (85°C). VersiGard White (White-on-black) Roofing Systems are not recommended for direct application over smooth BUR or granule surface BUR or in in conjunction with HP mat. Make sure substrate is clean and free of roofing cement and fresh asphalt to avoid sheet contamination and staining of white color membrane.
3) Loose gravel must be removed to avoid entrapment of moisture.
4) Existing coal tar could drip back into the building, especially when new insulation does not provide sufficient thermal value to prevent the surface of the coal tar from softening.
5) Not Approved over existing ballasted single-ply systems (even if ballast removed). An approved underlayment is required over existing roofing systems of any type.
6) Direct application permitted over smooth surfaced modified bitumen. Membrane shall be positioned with length of sheets parallel to modified bitumen field seams. At end laps or other locations where splices intersect modified bitumen field seams, 6" wide VersiWeld or VersiFlex Flashing must be heat welded over intersections. For VersiGard, 6" wide Uncured or Quick-Applied Flashing must be applied over intersections.
7) Existing Type III or IV smooth asphalt BUR only.
8) Possible staining/discoloration of light-colored membrane may result when installing this system directly over existing smooth surfaced BUR or modified bitumen. If aesthetics is critical, an approved insulation should be specified beneath the membrane.
9) Maximum warranty available 20 YR with 55 MPH peak gust wind speed coverage. Carlisle may be contacted for other warranty options.

3. **Re-Roof (Partial Tear Off, Deck Not Exposed)**

   a. Partial tear-off does not allow a continuous air seal below the membrane and these projects are not recommended for use with Vented Roof Systems, without verification of an existing air barrier.

4. **New Construction / Re-Roof (Complete Tear-Off, Deck Exposed)**

   All deck types (Steel, Concrete, Wood, Cementitious Wood Fiber or Gypsum) require a continuous air seal which can be achieved utilizing an air barrier at the deck level.

F. Installation

1. Daily Seal

   a. On phased roofing, when the completion of flashings and terminations is not possible by the end of each workday, provisions must be taken to temporarily close the membrane to prevent water and air infiltration.

   b. Temporarily seal any loose membrane edge down slope using G400PS-2 Pourable Sealer (EPDM only), Flexible DASH Adhesive, hot asphalt, or a similar product so that the membrane edge will not buck water. Caution must be exercised to ensure positive draining during installation, temporary seal locations should be designated so that drainage is not restricted during construction by partially installed roof sections.

      1) When applying Flexible DASH Adhesive or other sprayed urethane foam, prime the surface of the membrane with Versico Primer to ensure proper adhesion.

      2) G400PS-2 Pourable Sealer, when utilized, shall be applied as follows:

a) The two Pourable Sealer components must be mixed in accordance with the instructions on the container labels.
b) Apply the Pourable Sealer along the loose edge of the EPDM membrane. If necessary, use a trowel to spread Pourable Sealer to achieve complete coverage.

c. When tie-in to existing built-up roofs, remove the gravel. The surface must be clean and dry.

d. After embedding membrane in daily seal material, CHECK FOR CONTINUOUS CONTACT. Provide continuous pressure over the length of the temporary seal. Provide weight evenly distributed along the length of the daily seal to reduce the wind effect on the continuous temporary seal.

NOTE: The use of rigid wood nailers is not recommended due to warping. Constant compression cannot be achieved on an uneven substrate.

e. When work is resumed, pull the imbedded membrane free; trim and remove daily seal material from membrane before continuing installation of adjoining sections.

2. Follow guidelines above for the installation and air sealing of roof deck perimeters and penetrations.

3. After placement of insulation and coverboard, layout the vents and air distribution strips per engineered layout drawing provided by VacuSeal Technology. Mark placement of vents on substrate with chalk or marker.

4. Loose lay roofing membrane over the air distribution strips and air vent locations. Allow the membrane to relax.

5. Place the VacuSeal Roof Vents on previous marks and cut out membrane as needed for installation of vent, follow details for specific requirements for each vent.

6. Flash VacuSeal Roof Vent per requirements outlined in detail.

7. Repeat installation for additional vents.

G. Field Quality Control

1. Contact VacuSeal Technology technical staff for vacuum test of roof system to verify airtight assembly.

2. Repair or remove and replace components of membrane roofing system where inspections indicate that they do not comply with specified requirements.

H. Associated Installation Details

Roof Assembly Over Existing Single-Ply Roof V-0.1
Roof Assembly Over Existing Asphaltic Roof V-0.2
Roof Assembly Over Steel Deck V-0.3
Roof Assembly Over Poured-In-Place Concrete Deck V-0.4
Roof Assembly Over Concrete Plank V-0.5
Roof Assembly Over Lightweight Concrete Deck V-0.6
Roof Assembly Wood Deck V-0.7
Roof Edge: Roof Recover V-1.1
Roof Edge: Tear-Off & Re-Roofing V-1.2
Curb Base Flashing – New Construction and Re-Roof (Recover) V-5.1
Roof Drain: Re-Roof (Recover) V-6.1
Roof Drain: New Construction V-6.2
VacuSeal Vent with Pre-Applied Skirt Flashing V-8.0
Pipe/Structural Steel Tube Through Metal Deck V-8.1
Multiple Penetrations Through Steel Deck – New Construction V-8.2
Single Penetration Through Existing Roof Assembly V-8.3
Cluster of Penetrations Through Existing Roof Assembly V-8.4
Hot Stack Air Flashing – Option A V-8.5A
Hot Stack Air Flashing – Option B V-8.5B
Parapet With Membrane Air Barrier V-12.1
Parapet/Curb: Concrete/Lightweight Concrete Used as an Air Barrier V-12.2
Parapet or Wall: New Construction and Re-Roof (Recover) V-12.3

ROOF ASSEMBLY WITHOUT NEW INSULATION

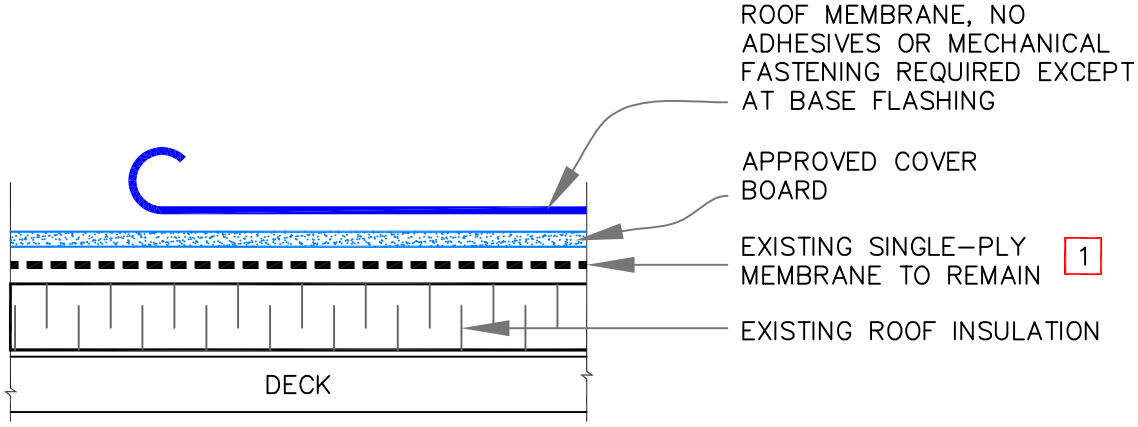

NOTE:

1. EXISTING ROOF MEMBRANE MAY BE USED AS AN AIR BARRIER. IT WILL REQUIRE THOROUGH INSPECTION FOR BREACHES, DAMAGES, AND AIR TIGHTNESS OF EXISTING FLASHING. SEAL ALL DEFICIENT CONDITIONS TO ACHIEVE AN AIRTIGHT AIR BARRIER.

ROOF ASSEMBLY WITH NEW INSULATION

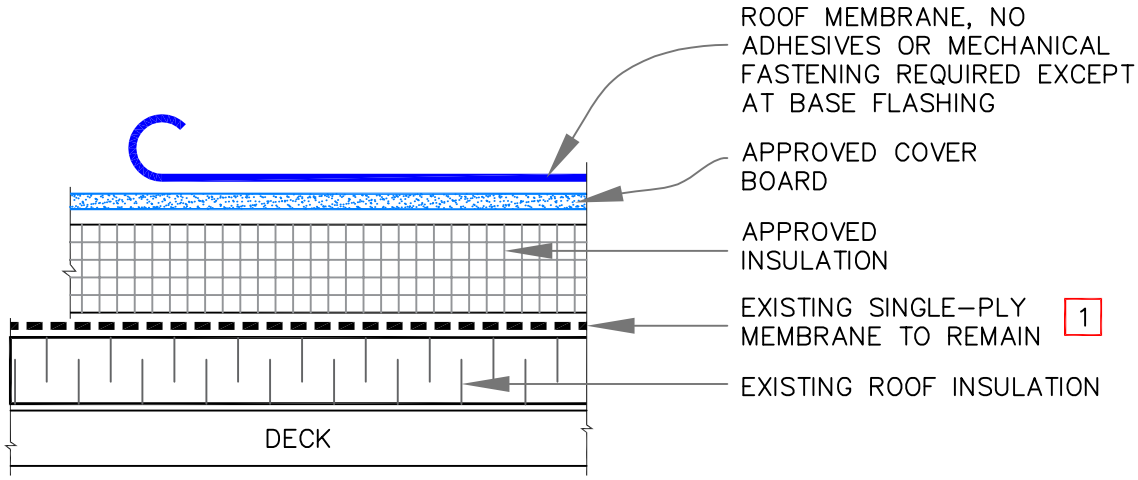

See sheets V-0.1 to V-0.7 & Specs for additional information

VERSICO ROOFING SYSTEMS
© 2023 VERSICO

ROOF ASSEMBLY OVER EXISTING SINGLE-PLY ROOF

NEW MEMBRANE
EXISTING MEMBRANE
INSULATION
0 SEE NOTE(S)

VENT SECURED ROOFING SYSTEM

V-0.1

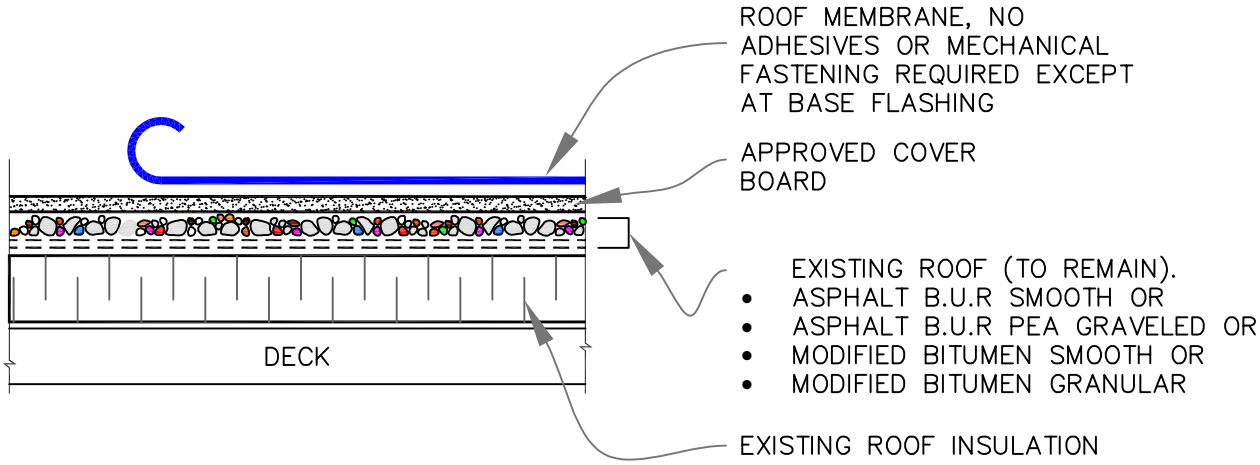

NOTES:

1. EXISTING ROOF MEMBRANE MAY BE USED AS AN AIR BARRIER. IT WILL REQUIRE THOROUGH INSPECTION FOR BREACHES, DAMAGES, BLISTERS, WRINKLES AND AIR TIGHTNESS OF EXISTING FLASHING. SEAL ALL DEFICIENT CONDITIONS TO ACHIEVE AN AIRTIGHT AIR BARRIER.

2. FOR NEW ASSEMBLY OVER COAL TAR PITCHED ROOF, CONTACT VERSICO.

3. LOOSE GRAVEL OR GRANULES MUST BE REMOVED AND THE SURFACE SHALL BE LEVELED.

See sheets V–0.1 to V–0.7 & Specs for additional information

VERSICO ROOFING SYSTEMS
© 2023 VERSICO

ROOF ASSEMBLY OVER EXISTING ASPHALTIC ROOF

NEW MEMBRANE
EXISTING MEMBRANE
INSULATION
0 SEE NOTE(S)

VENT SECURED ROOFING SYSTEM

V–0.2

OPTION A

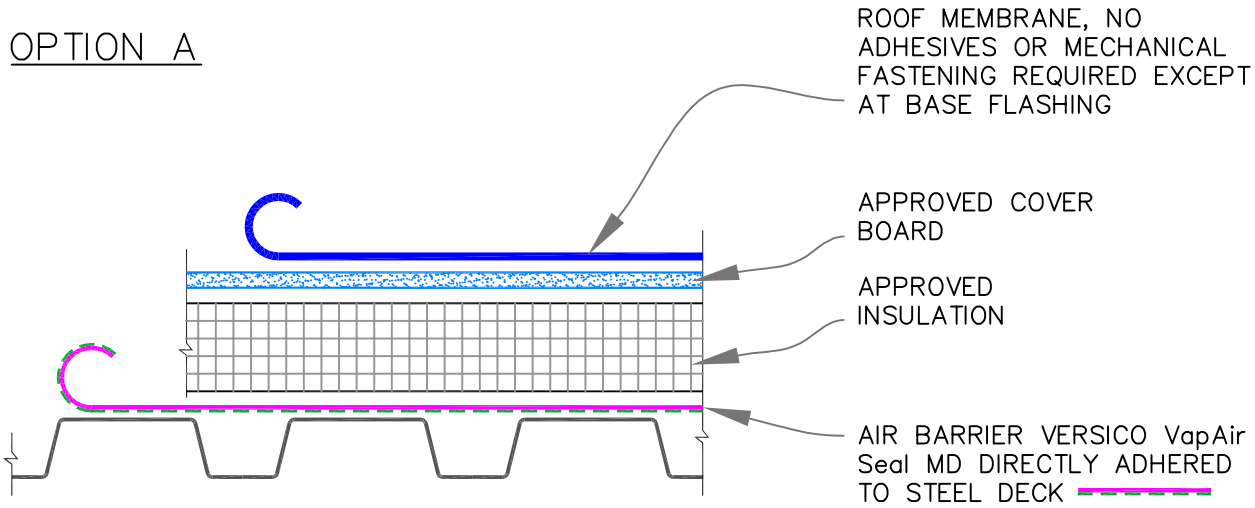

OPTION B

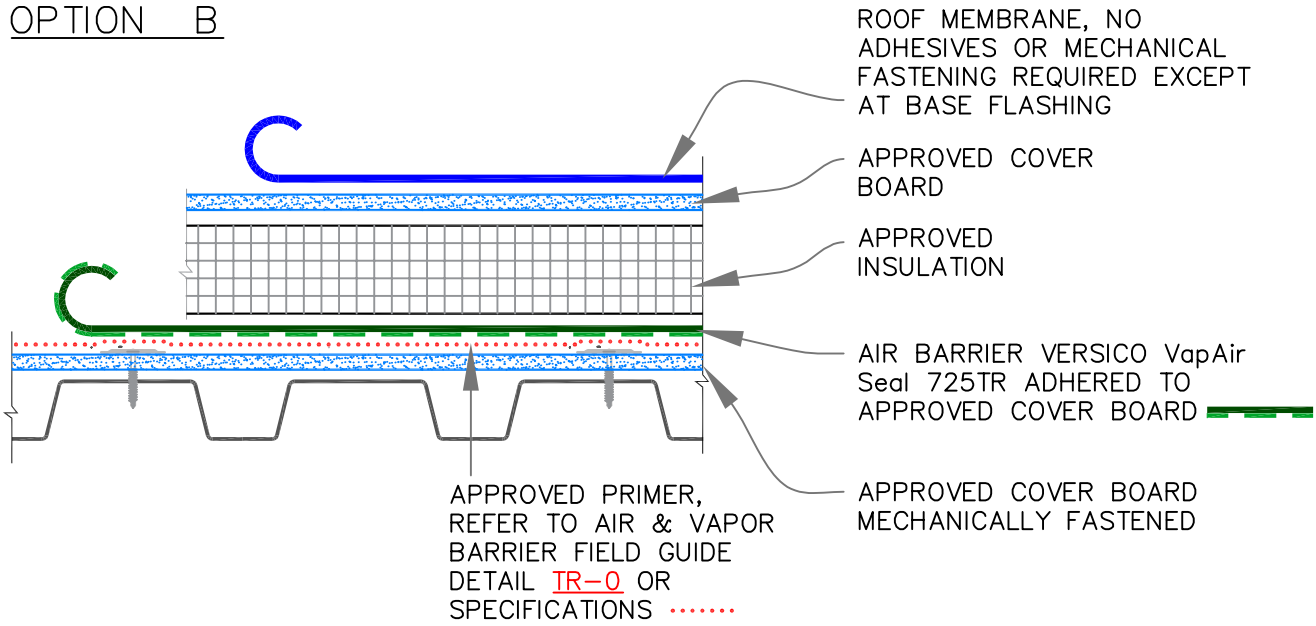

See sheets V-0.1 to V-0.7 & Specs for additional information

VERSICO ROOFING SYSTEMS
© 2023 VERSICO

ROOF ASSEMBLY – OVER STEEL DECK

NEW MEMBRANE
EXISTING MEMBRANE
INSULATION
0 SEE NOTE(S)

VENT SECURED ROOFING SYSTEM

V-0.3

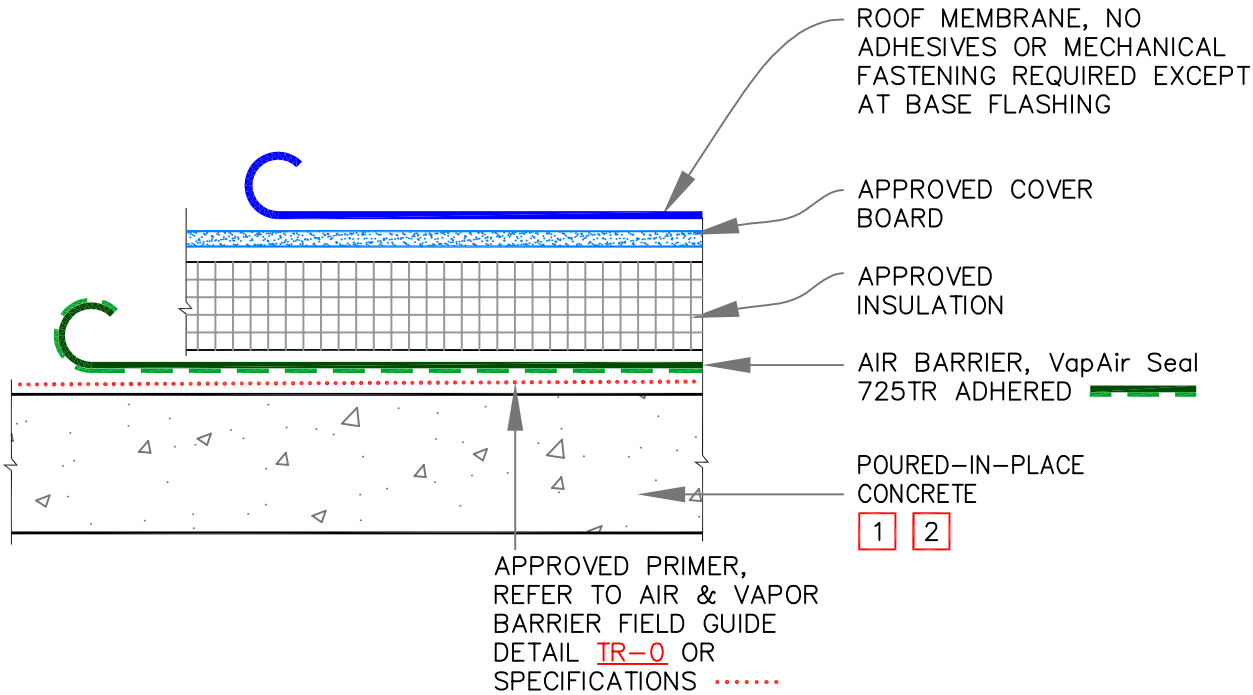

NOTES:

1. THE SUBSTRATE MAY NOT REQUIRE AN ADDITIONAL LAYER OF AIR BARRIER. TO ENSURE THAT A CONTINUOUS AIR-SEAL IS PROVIDED, THE SUBSTRATE MUST BE INSPECTED FOR BREACHES FOR AIR INFILTRATION AT CRACKS, JOINTS, PENETRATIONS, ROOF EDGES, PARAPET WALLS, AND SIMILAR CONDITIONS.

See sheets V-0.1 to V-0.7 & Specs for additional information

VERSICO ROOFING SYSTEMS

© 2023 VERSICO

ROOF ASSEMBLY OVER POURED-IN-PLACE CONCRETE DECK

NEW MEMBRANE
EXISTING MEMBRANE
INSULATION
0 SEE NOTE(S)

VENT SECURED ROOFING SYSTEM

V-0.4

HOLLOW CORE CONCRETE PLANKS

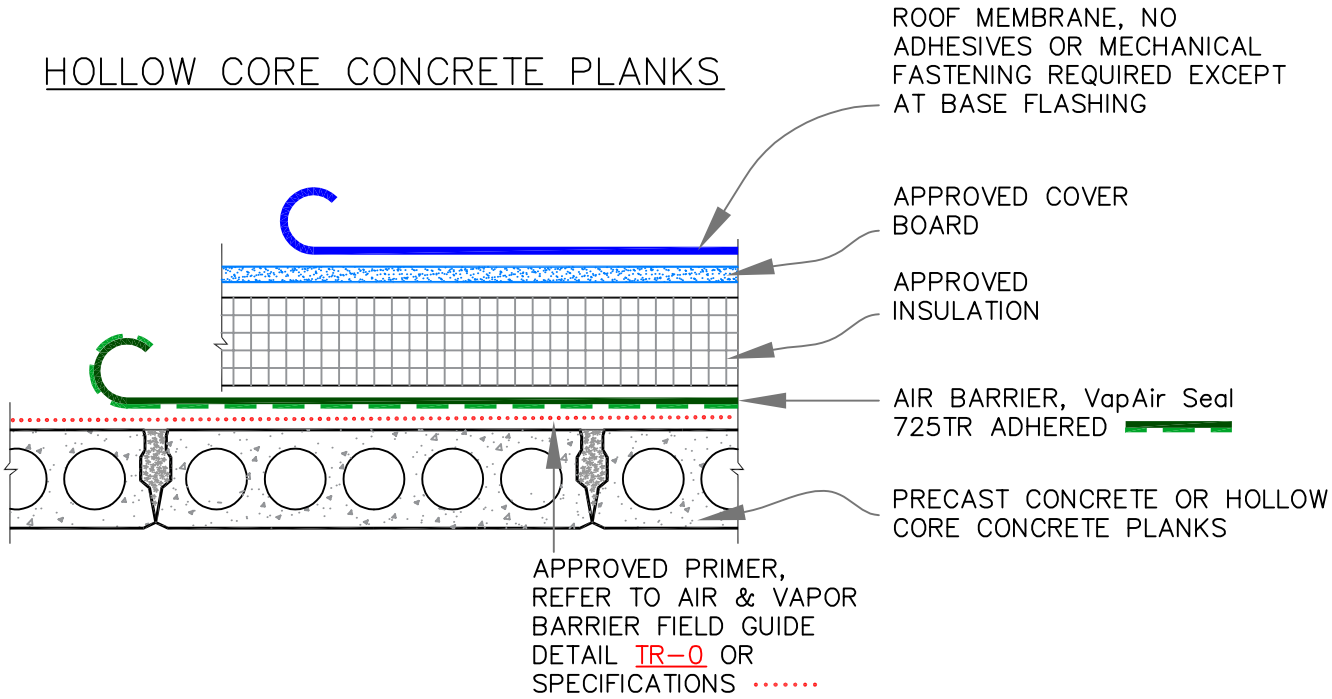

HOLLOW CORE CONCRETE PLANKS WITH TOPPING

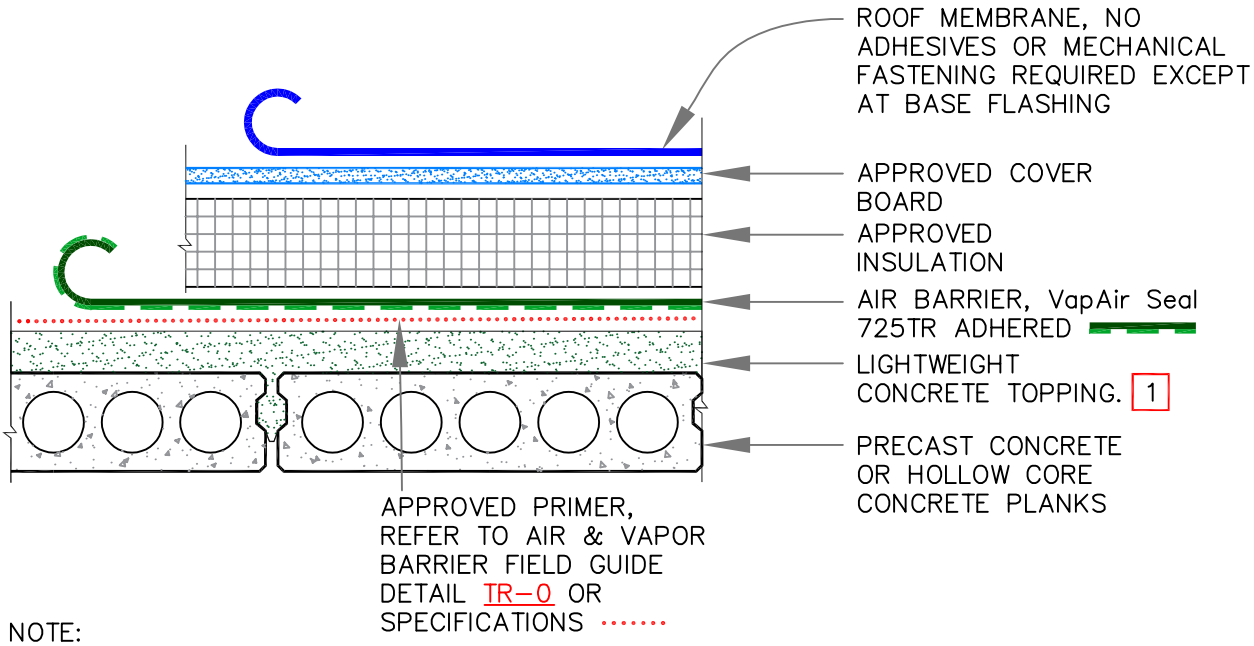

NOTE:

1. THE SUBSTRATE MAY NOT REQUIRE AN ADDITIONAL LAYER OF AIR BARRIER WHEN CONCRETE TOPPING EXISTS. TO ENSURE THAT A CONTINUOUS AIR–SEAL IS PROVIDED, THE SUBSTRATE MUST BE INSPECTED FOR BREACHES FOR AIR INFILTRATION AT CRACKS, JOINTS, PENETRATIONS, ROOF EDGES, PARAPET WALLS, AND SIMILAR CONDITIONS & PROPER REPAIRS MUST BE PERFORMED.

See sheets V–0.1 to V–0.7 & Specs for additional information

© 2023 VERSICO

ROOF ASSEMBLY OVER CONCRETE PLANKS

NEW MEMBRANE
EXISTING MEMBRANE
INSULATION
0 SEE NOTE(S)

VENT SECURED ROOFING SYSTEM

V–0.5

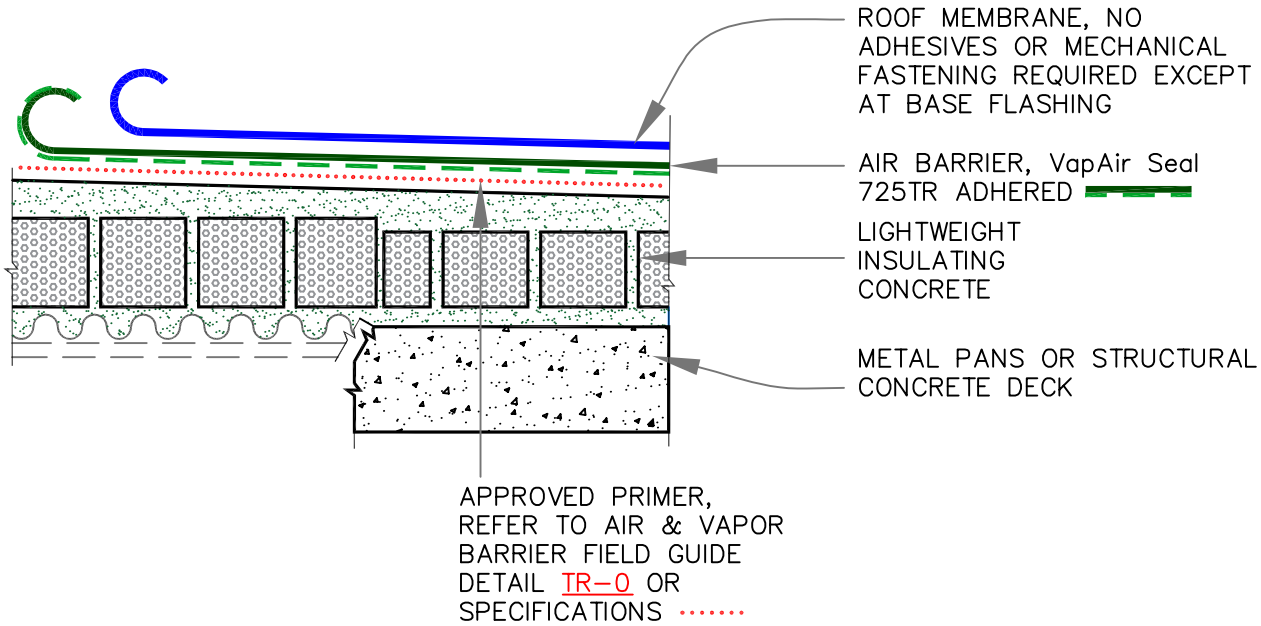

NOTE:

1. THE SUBSTRATE MAY NOT REQUIRE AN ADDITIONAL LAYER OF AIR BARRIER WHEN CONCRETE TOPPING EXISTS. TO ENSURE THAT CONCRETE SUBSTRATE PROVIDES A CONTINUOUS AIR–SEAL, THE SUBSTRATE MUST BE INSPECTED FOR AIR INFILTRATION. INSPECT FOR BREACHES CRACKS, JOINTS, PENETRATIONS, ROOF EDGES, PARAPET WALLS JUNCTIONS, AND SIMILAR CONDITIONS. PROPER REPAIRS MUST BE PERFORMED TO CREATE AN AIR BARRIER.

See sheets V–0.1 to V–0.7 & Specs for additional information

© 2023 VERSICO

ROOF ASSEMBLY OVER LIGHTWEIGHT CONCRETE DECK

NEW MEMBRANE
EXISTING MEMBRANE
INSULATION
0 SEE NOTE(S)

VENT SECURED ROOFING SYSTEM

V–0.6

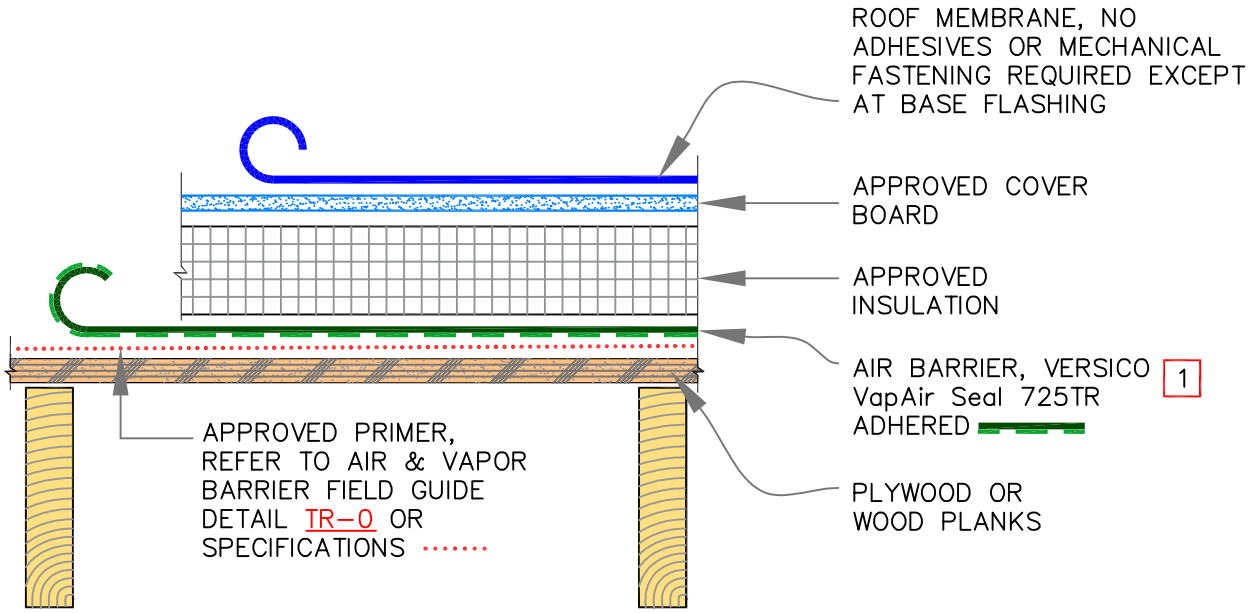

NOTES:

1. TO AVOID POTENTIAL DAMAGE TO AIR AND VAPOR BARRIER, PROTRUDING NAILS/FASTENERS SHALL BE REMOVED AND REPLACED WITH HEAVY GAUGE THREADED FASTENERS.

2. AS AN OPTION, THE AIR AND VAPOR BARRIER MAY BE ADHERED TO MECHANICALLY FASTENED SECUROCK OR DensDeck PRIME COVER BOARD.

See sheets V–0.1 to V–0.7 & Specs for additional information

VERSICO ROOFING SYSTEMS
© 2023 VERSICO

ROOF ASSEMBLY OVER WOOD DECK

NEW MEMBRANE
EXISTING MEMBRANE
INSULATION
0 SEE NOTE(S)

VENT SECURED ROOFING SYSTEM

V–0.7

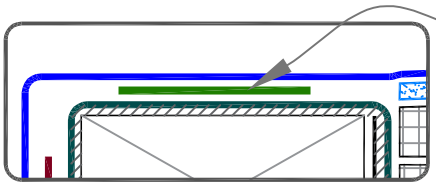

IN LIEU OF BONDING ADHESIVE, 3" (7.5cm) WIDE QA SEAM TAPE MAY BE USED WITH PRIMER TO SEAL BOTH THE MEMBRANES

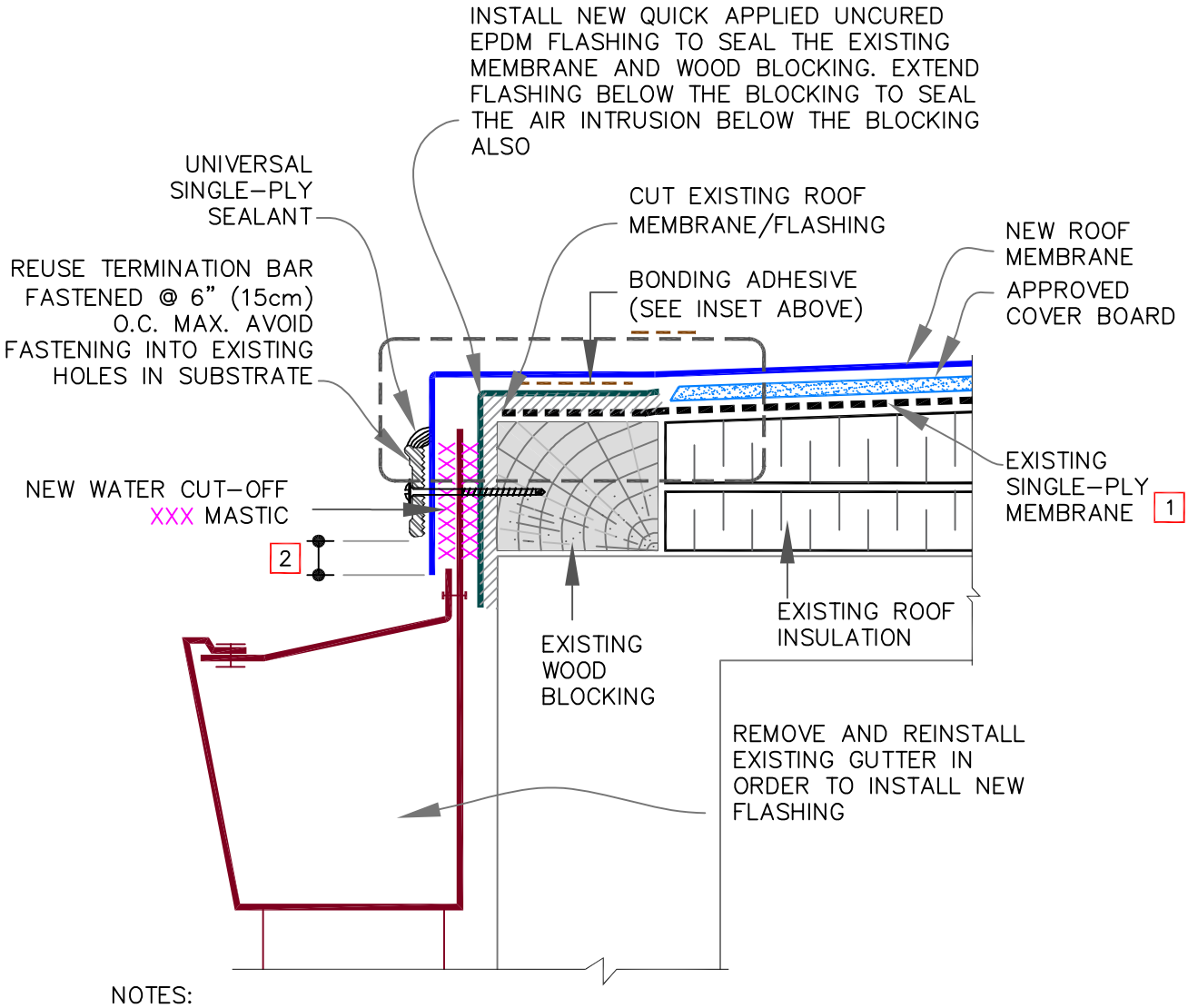

NOTES:

1. EXISTING ROOF MEMBRANE MAY BE USED AS AN AIR BARRIER. IT WILL REQUIRE THOROUGH INSPECTION FOR BREACHES, DAMAGES, AND AIR TIGHTNESS OF EXISTING FLASHING. SEAL ALL DEFICIENT CONDITIONS TO ACHIEVE AN AIRTIGHT AIR BARRIER.

2. ALLOW MEMBRANE SHEET TO EXTEND 1/2" (1.5cm) MINIMUM BELOW THE METAL TERMINATION BAR.

See sheets V-0.1 to V-0.7 & Specs for additional information

VERSICO ROOFING SYSTEMS
© 2023 VERSICO

ROOF EDGE: ROOF RECOVER

NEW MEMBRANE
EXISTING MEMBRANE
INSULATION
0 SEE NOTE(S)

VENT SECURED ROOFING SYSTEM

V-1.1

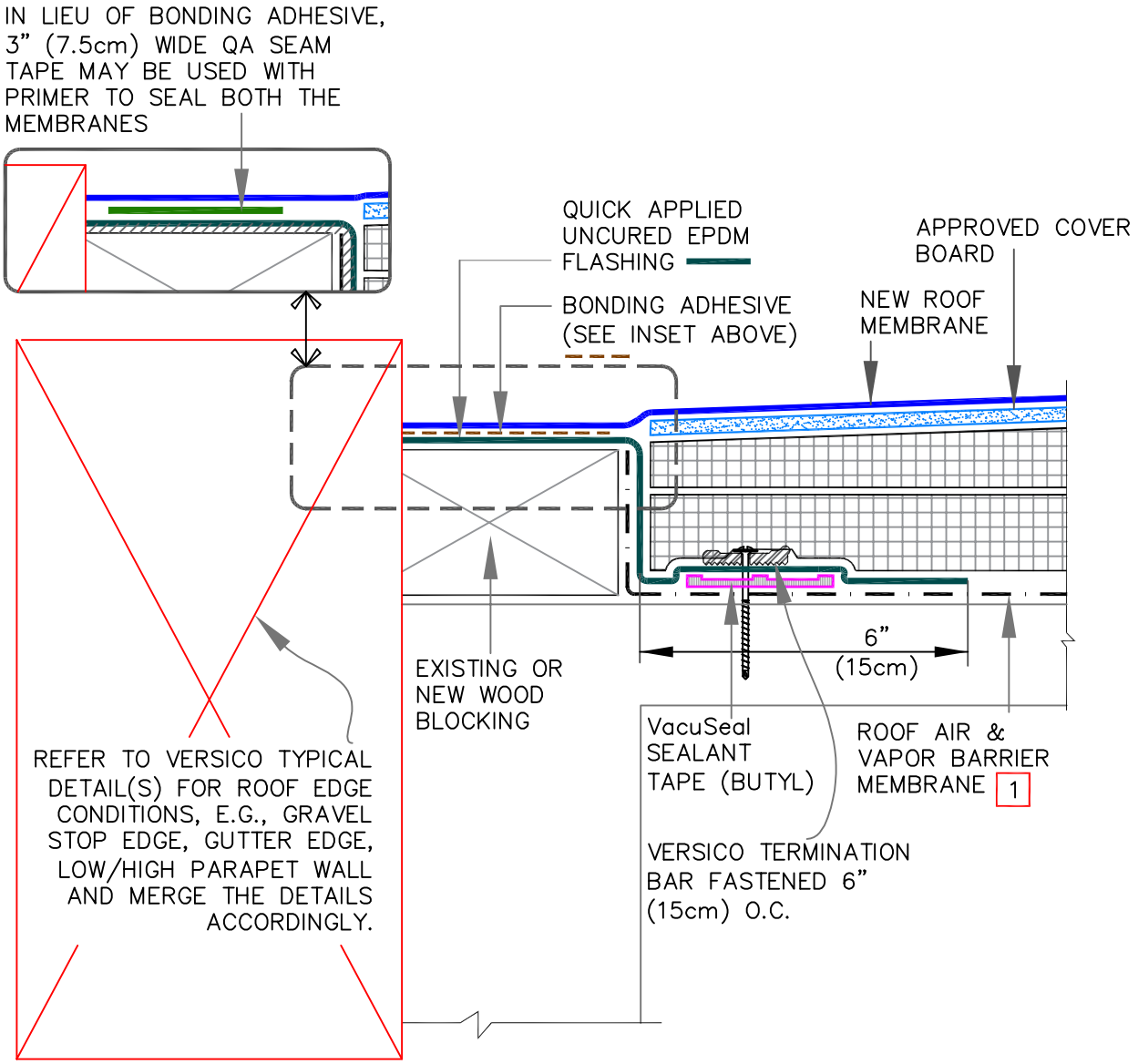

NOTES:

1. USE VapAir Seal 725TR AIR AND VAPOR BARRIER ON CONCRETE DECKS.

2. IN CASE OF METAL DECK, COORDINATE WITH VERSICO.

See sheets V–0.1 to V–0.7 & Specs for additional information

VERSICO ROOFING SYSTEMS

© 2023 VERSICO

ROOF EDGE: TEAR–OFF & REROOFING

NEW MEMBRANE
EXISTING MEMBRANE
INSULATION
0 SEE NOTE(S)

VENT SECURED ROOFING SYSTEM

V–1.2

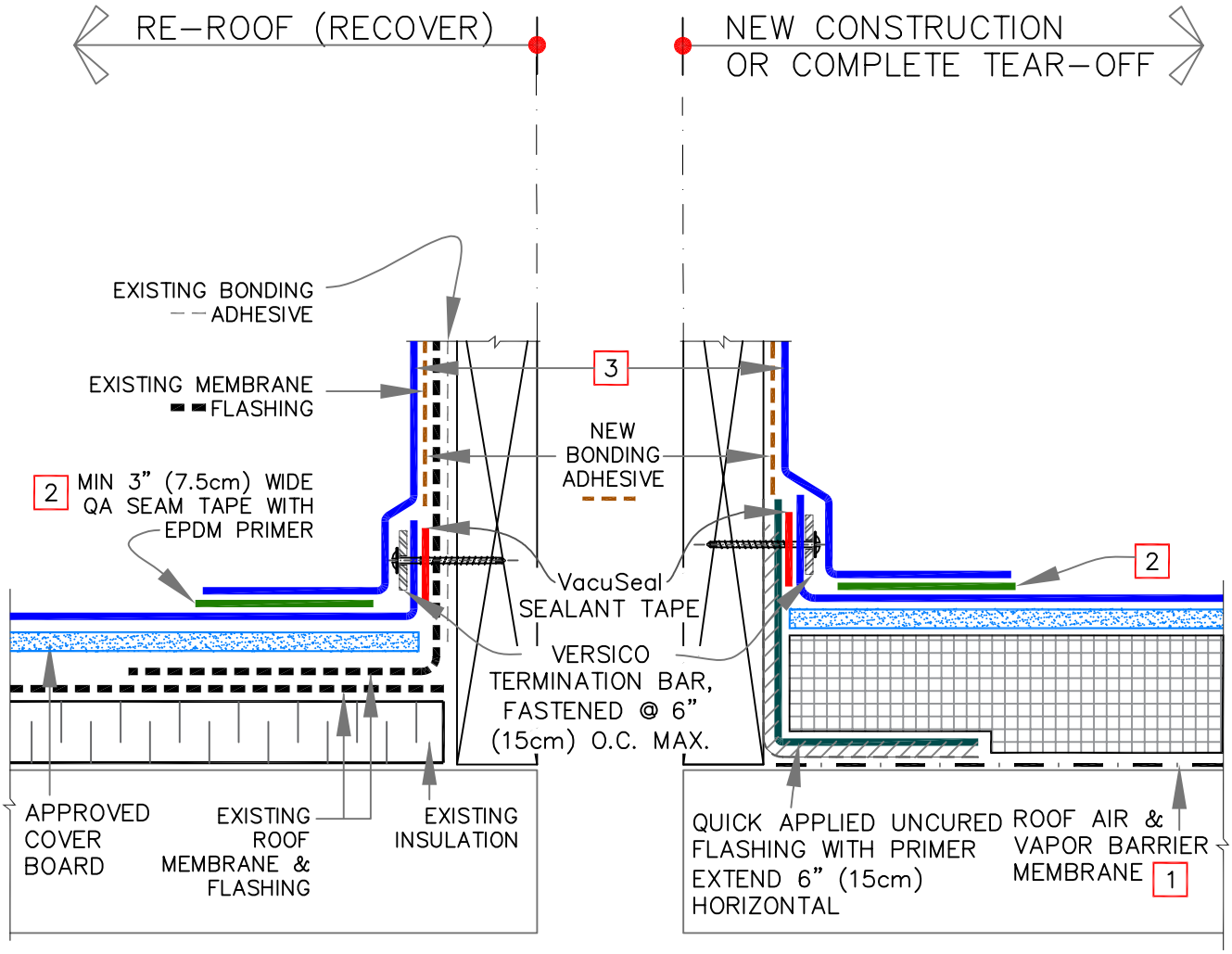

NOTES:

1. ON STEEL DECKS DIRECTLY ADHERE VERSICO VapAir Seal MD. USE VERSICO VapAir Seal 725TR ON CONCRETE & WOOD DECKS OR DECKS WITH APPROVED COVER BOARDS.

2. FOR ADDITIONAL INFORMATION, REFER TO VERSICO'S THERMOSET DETAIL VGC-5.1 FOR EPDM AND THERMOPLASTIC DETAIL TPC-5.1 FOR TPO/PVC.

3. SELF-ADHERING EPDM CURB WRAP MAY BE SUBSTITUTED AS FLASHING ON EPDM ROOFS.

See sheets V-0.1 to V-0.7 & Specs for additional information

VERSICO ROOFING SYSTEMS

© 2023 VERSICO

CURB BASE FLASHING – NEW CONSTRUCTION AND RE-ROOF (RECOVER)

NEW MEMBRANE
EXISTING MEMBRANE
INSULATION
0 SEE NOTE(S)

VENT SECURED ROOFING SYSTEM

V-5.1

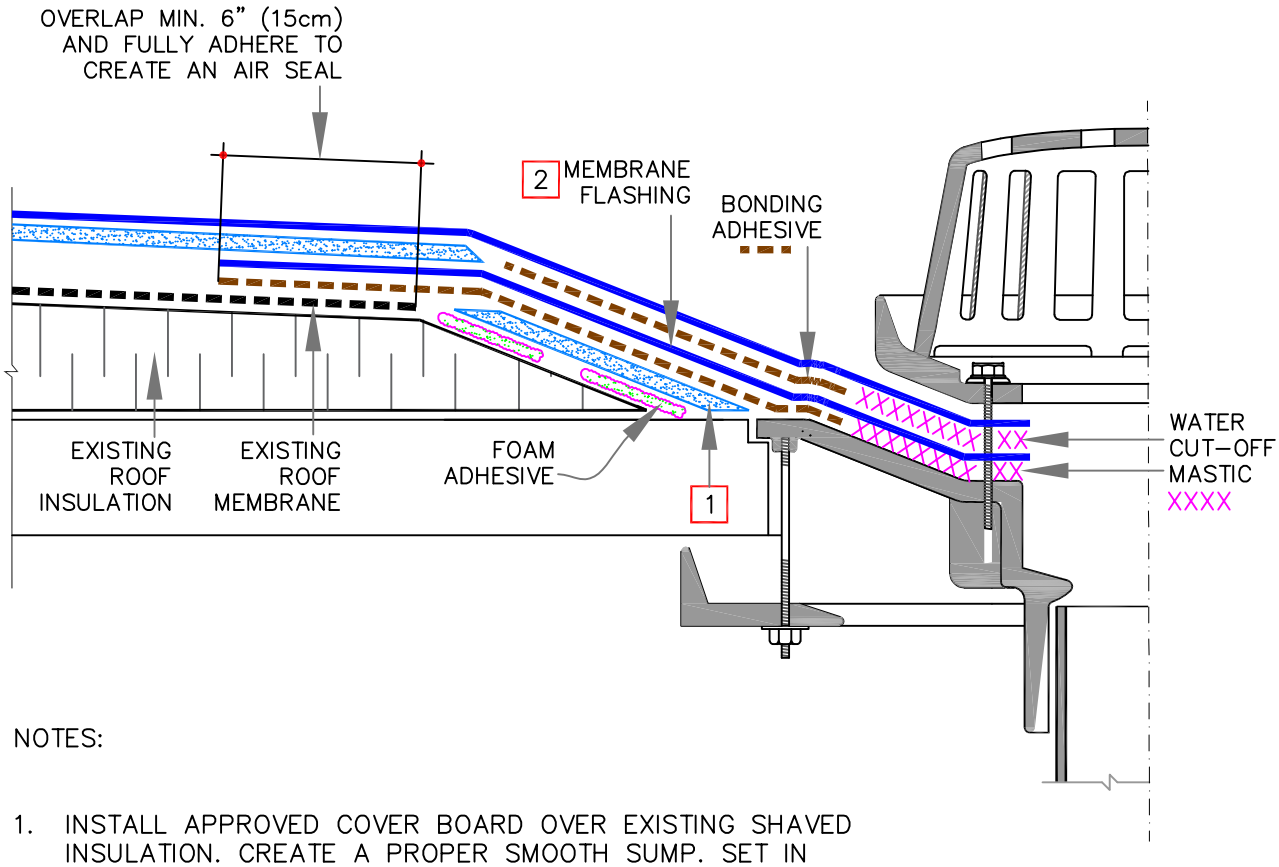

NOTES:

1. INSTALL APPROVED COVER BOARD OVER EXISTING SHAVED INSULATION. CREATE A PROPER SMOOTH SUMP. SET IN FOAM ADHESIVE.

2. FULLY ADHERE MEMBRANE FLASHING TO ACHIEVE AIRTIGHT CONDITION BETWEEN DRAIN AND EXISTING ROOF MEMBRANE. WHERE, THERE IS EXISTING ROOF VAPOR BARRIER, CUT IT BACK, IN ORDER TO PROPERLY AIR SEAL.

3. FOR ADDITIONAL INFORMATION, REFER TO VERSICO'S THERMOSET DETAIL VGC-6 FOR EPDM AND THERMOPLASTIC DETAIL TPC-6 FOR TPO/PVC.

See sheets V-0.1 to V-0.7 & Specs for additional information

VERSICO ROOFING SYSTEMS
© 2023 VERSICO

ROOF DRAIN: RE-ROOF (RECOVER)

NEW MEMBRANE
EXISTING MEMBRANE
INSULATION
0 SEE NOTE(S)

VENT SECURED ROOFING SYSTEM

V-6.1

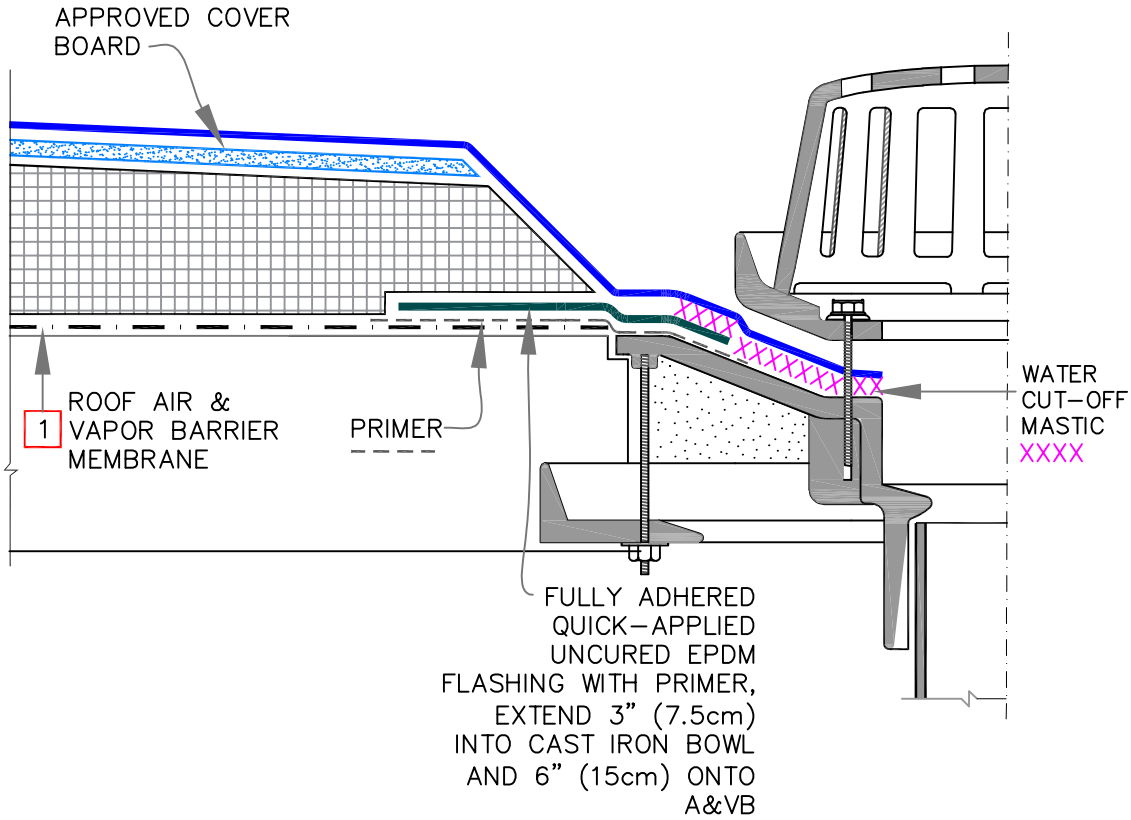

NOTES:

1. ON STEEL DECKS DIRECTLY ADHERE VERSICO VapAir Seal MD. USE VERSICO VapAir Seal 725TR ON CONCRETE & WOOD DECKS OR DECKS WITH APPROVED COVER BOARDS.

2. FOR ADDITIONAL INFORMATION, REFER TO VERSICO'S THERMOSET DETAIL VGC-6 FOR EPDM AND THERMOPLASTIC DETAIL TPC-6 FOR TPO/PVC.

See sheets V-0.1 to V-0.7 & Specs for additional information

VERSICO ROOFING SYSTEMS
© 2023 VERSICO

ROOF DRAIN: NEW CONSTRUCTION

NEW MEMBRANE
EXISTING MEMBRANE
INSULATION
0 SEE NOTE(S)

VENT SECURED ROOFING SYSTEM

V-6.2

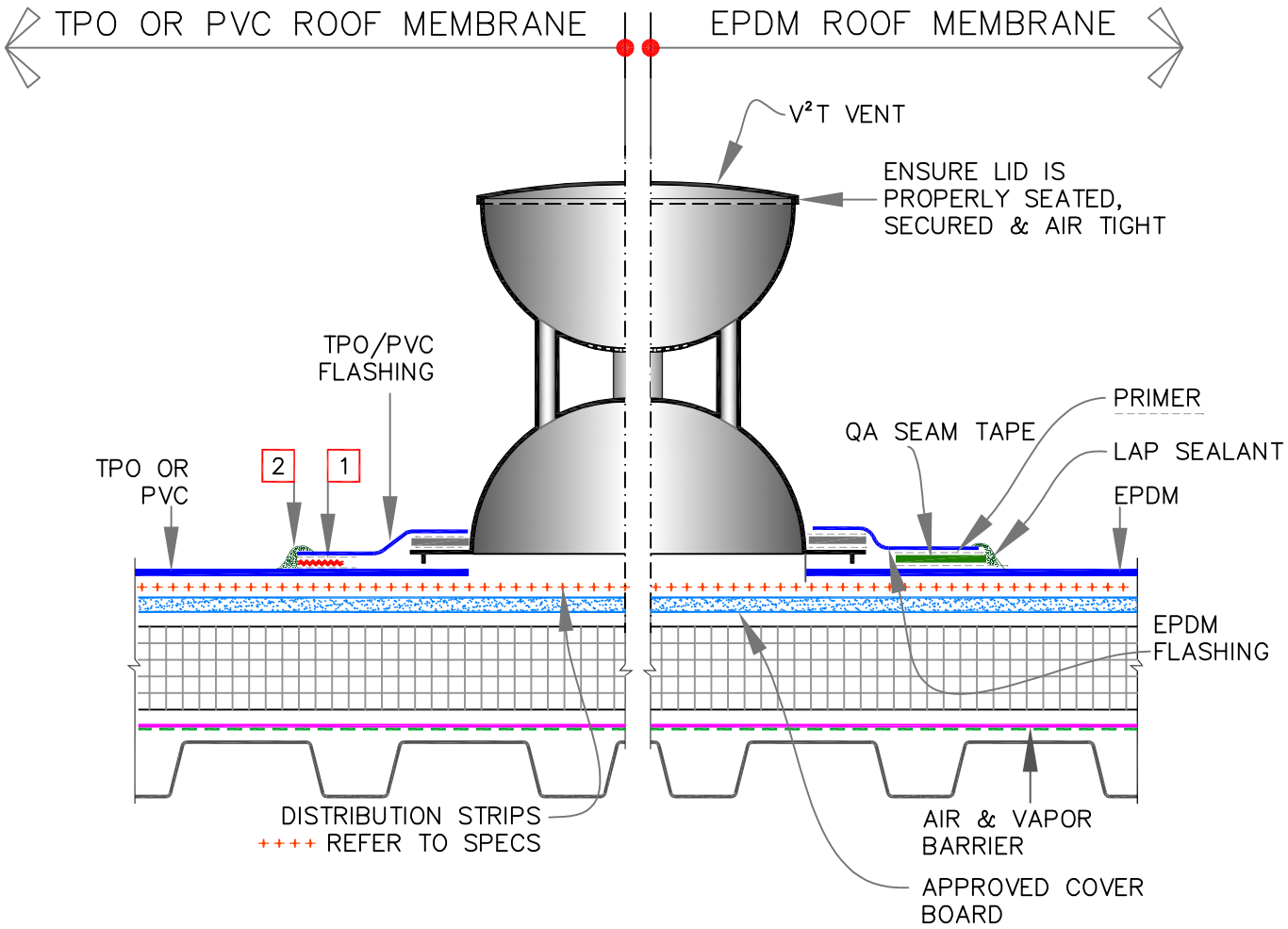

NOTES:

1. HOT AIR WELD, MIN. 1–1/2" (4cm).
2. APPROXIMATELY 1/8" (0.5cm) DIAMETER BEAD OF CUT–EDGE SEALANT IS REQUIRED ON CUT EDGES OF REINFORCED TPO MEMBRANE.

See sheets V–0.1 to V–0.7 & Specs for additional information

VERSICO ROOFING SYSTEMS
© 2023 VERSICO

V²T VENT WITH PRE–APPLIED SKIRT FLASHING

NEW MEMBRANE
EXISTING MEMBRANE
INSULATION
0 SEE NOTE(S)

VENT SECURED ROOFING SYSTEM

V–8.0

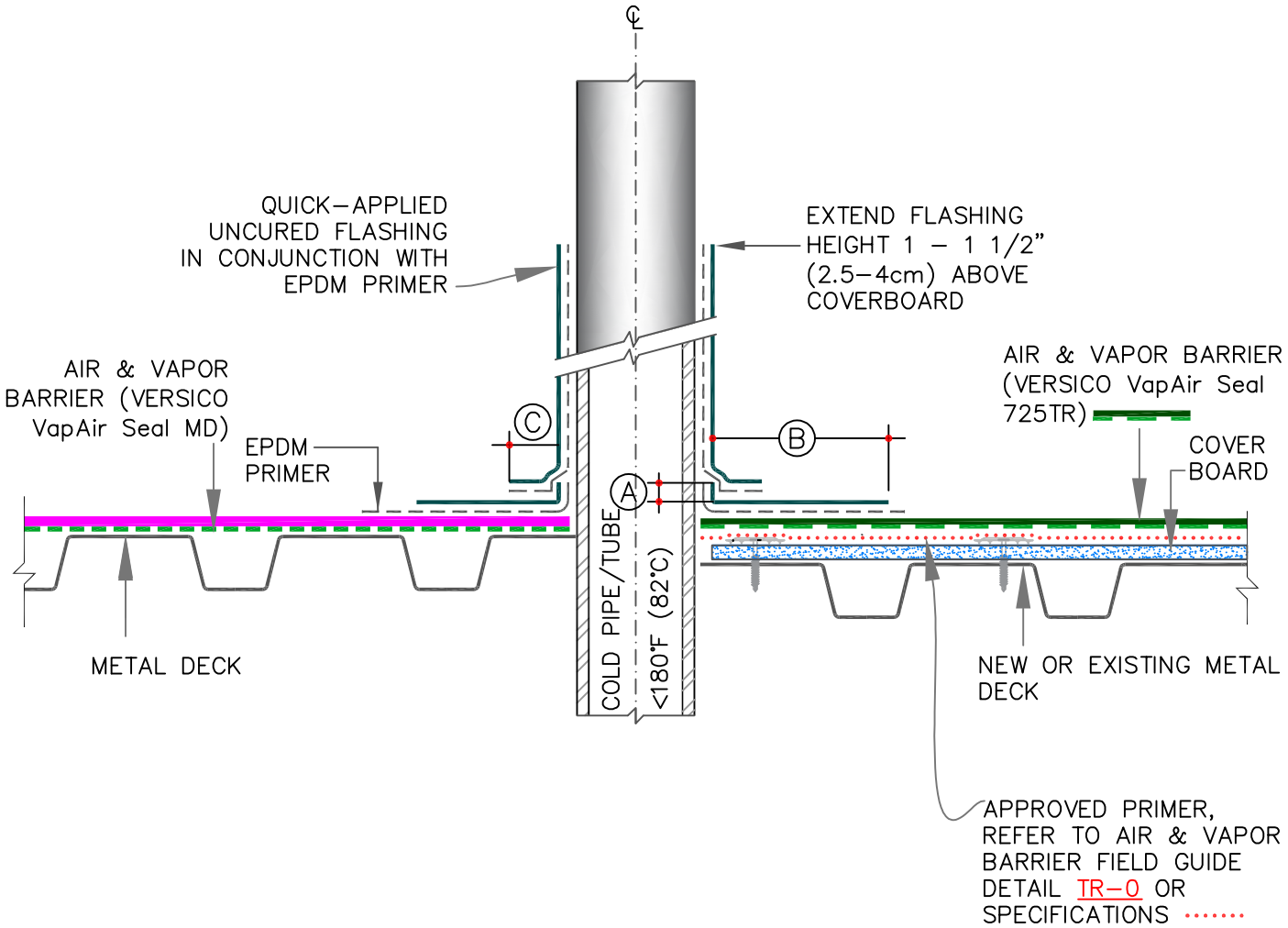

NOTE:

1. FOR ADDITIONAL INFORMATION, REFER TO VERSICO THERMOSET DETAIL VGC–8.2.

DIMENSIONS		cm	
A	1/2"	1.5	MIN.
B	5.5"	14	MIN.
C	1"	2.5	MIN.

See sheets V–0.1 to V–0.7 & Specs for additional information

VERSICO ROOFING SYSTEMS

© 2023 VERSICO

PIPE/STRUCTURAL STEEL TUBE THROUGH METAL DECK OPTION A

NEW MEMBRANE
EXISTING MEMBRANE
INSULATION
0 SEE NOTE(S)

VENT SECURED ROOFING SYSTEM

V–8.1

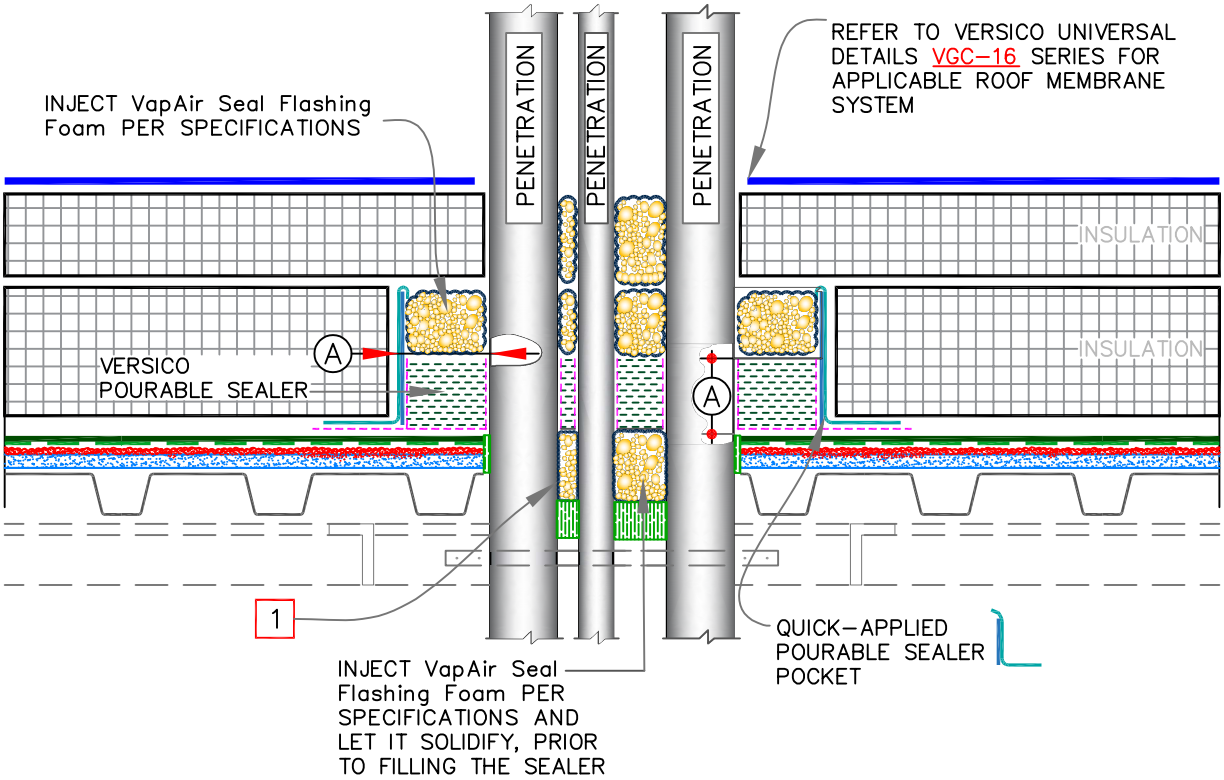

DIMENSIONS		cm	
A	1/2"	1.5	TO
	1"	2.5	

NOTES:

1. THE MAXIMUM ALLOWABLE SURFACE TEMPERATURE OF THE PENETRATION SHALL NOT EXCEED 180° F (82° C).

2. PENETRATIONS, AIR & VAPOR BARRIER, FLASHING AND METAL (INSIDE POCKET) MUST BE PRIMED WITH EPDM PRIMER PRIOR TO APPLYING POURABLE SEALER. DO NOT PRIME THE BLUE PLASTIC SUPPORT STRIP.

3. POURABLE SEALER MUST CONTACT PRIMED QUICK-APPLIED UNCURED EPDM FLASHING AND AIR & VAPOR BARRIER.

4. PIPE CLUSTERS MUST HAVE MINIMUM 1" (2.5cm) CLEARANCE BETWEEN PENETRATIONS.

See sheets V-0.1 to V-0.7 & Specs for additional information

VERSICO ROOFING SYSTEMS
© 2023 VERSICO

MULTIPLE PENETRATIONS THROUGH STEEL DECK – NEW CONSTRUCTION

NEW MEMBRANE
EXISTING MEMBRANE
INSULATION
0 SEE NOTE(S)

VENT SECURED ROOFING SYSTEM

V-8.2

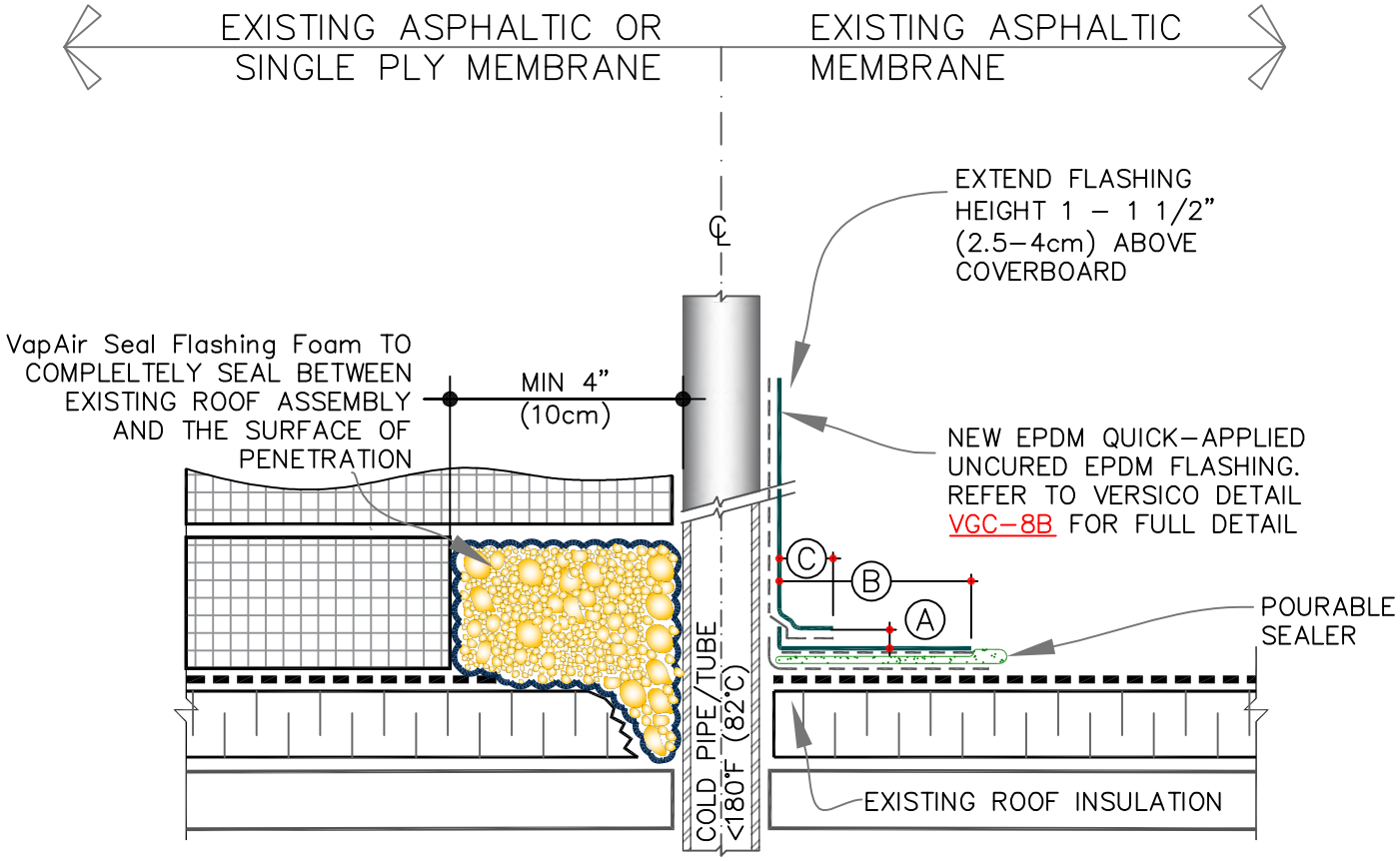

DIMENSIONS		cm	
A	1/2"	1.5	MIN.
B	5.5"	14	MIN.
C	1"	2.5	MIN.

See sheets V–0.1 to V–0.7 & Specs for additional information

VERSICO ROOFING SYSTEMS
© 2023 VERSICO

SINGLE PENETRATION THROUGH EXISTING ROOF ASSEMBLY

NEW MEMBRANE
EXISTING MEMBRANE
INSULATION
0 SEE NOTE(S)

VENT SECURED ROOFING SYSTEM

V–8.3

NOTES:

1. APPLY NEW SEALANT AT ALL CRACKED AND BREACHED AREAS OF POURABLE SEALERS. ENSURE A PROPER BOND BETWEEN EXISTING MATERIAL AND THE PENETRATIONS

2. FILL VOIDS AROUND NEW INSULATION WITH FOAM.

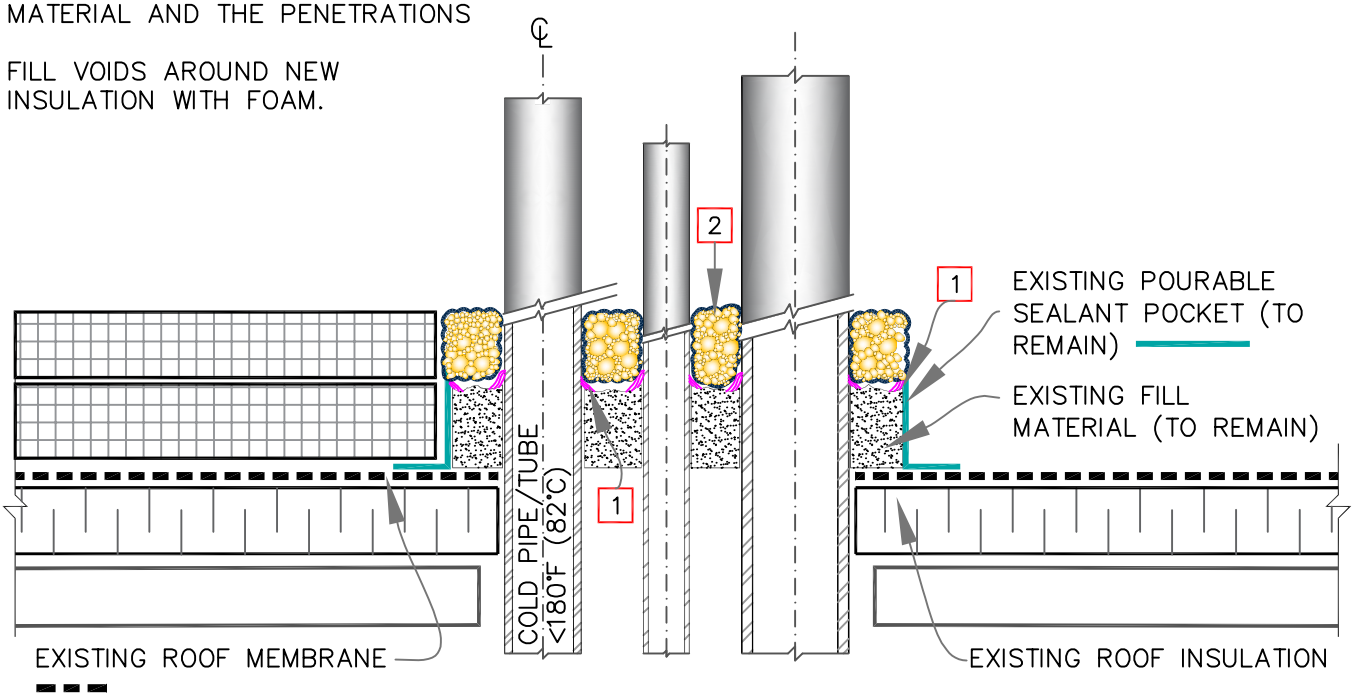

See sheets V–0.1 to V–0.7 & Specs for additional information

VERSICO ROOFING SYSTEMS
© 2023 VERSICO

CLUSTER OF PENETRATIONS THROUGH EXISTING ROOF ASSEMBLY

NEW MEMBRANE
EXISTING MEMBRANE
INSULATION
0 SEE NOTE(S)

VENT SECURED ROOFING SYSTEM

V–8.4

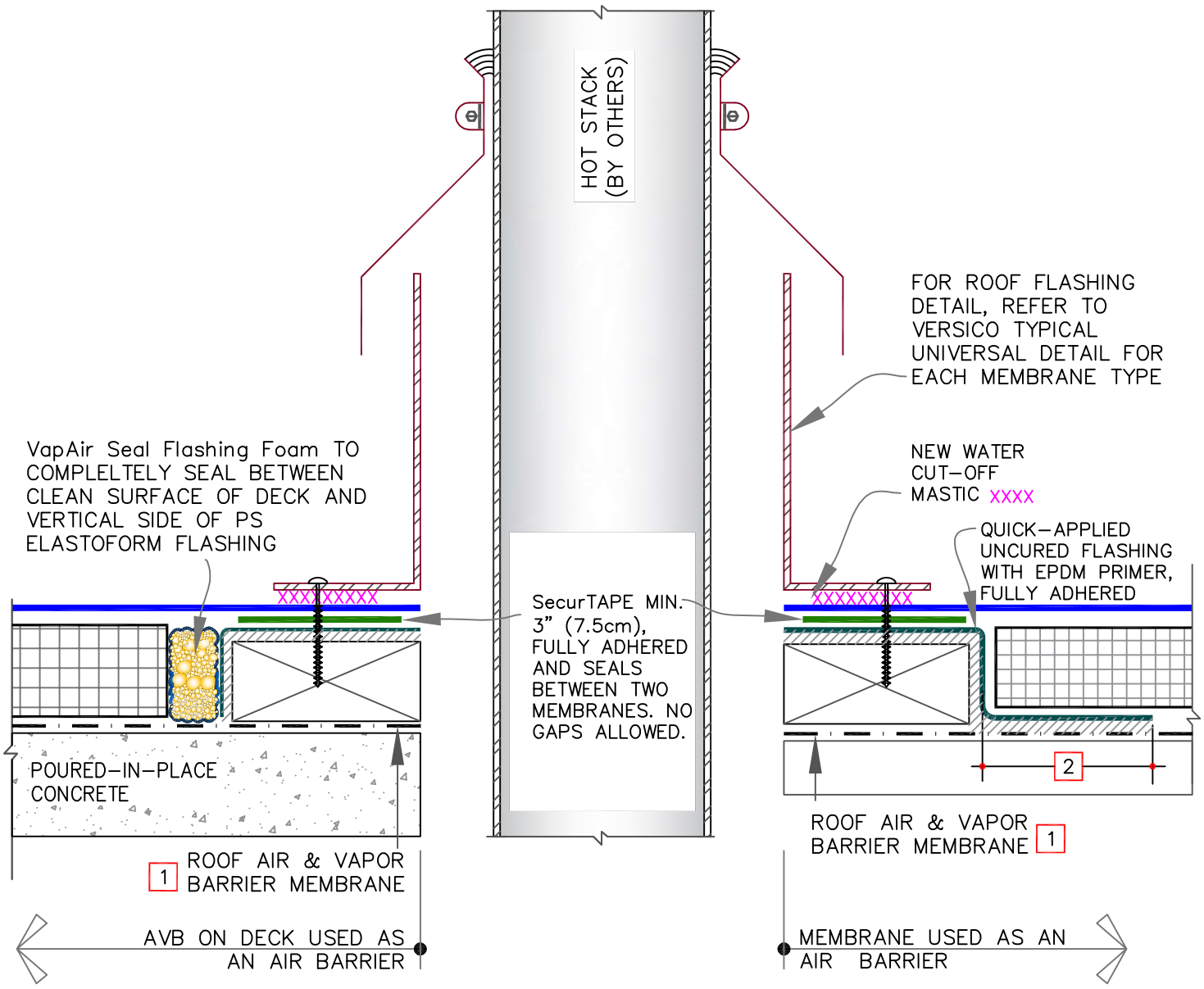

NOTES:

1. ON STEEL DECKS DIRECTLY ADHERE VapAir Seal MD. USE VapAir Seal 725TR ON CONCRETE & WOOD DECKS OR DECKS WITH APPROVED COVER BOARDS.

2. OVERLAP MIN. 6" (15cm) AND FULLY ADHERE TO CREATE AN AIR SEAL.

See sheets V-0.1 to V-0.7 & Specs for additional information

VERSICO ROOFING SYSTEMS
© 2023 VERSICO

HOT STACK AIR FLASHING – OPTION A

NEW MEMBRANE
EXISTING MEMBRANE
INSULATION
0 SEE NOTE(S)

VENT SECURED ROOFING SYSTEM

V-8.5A

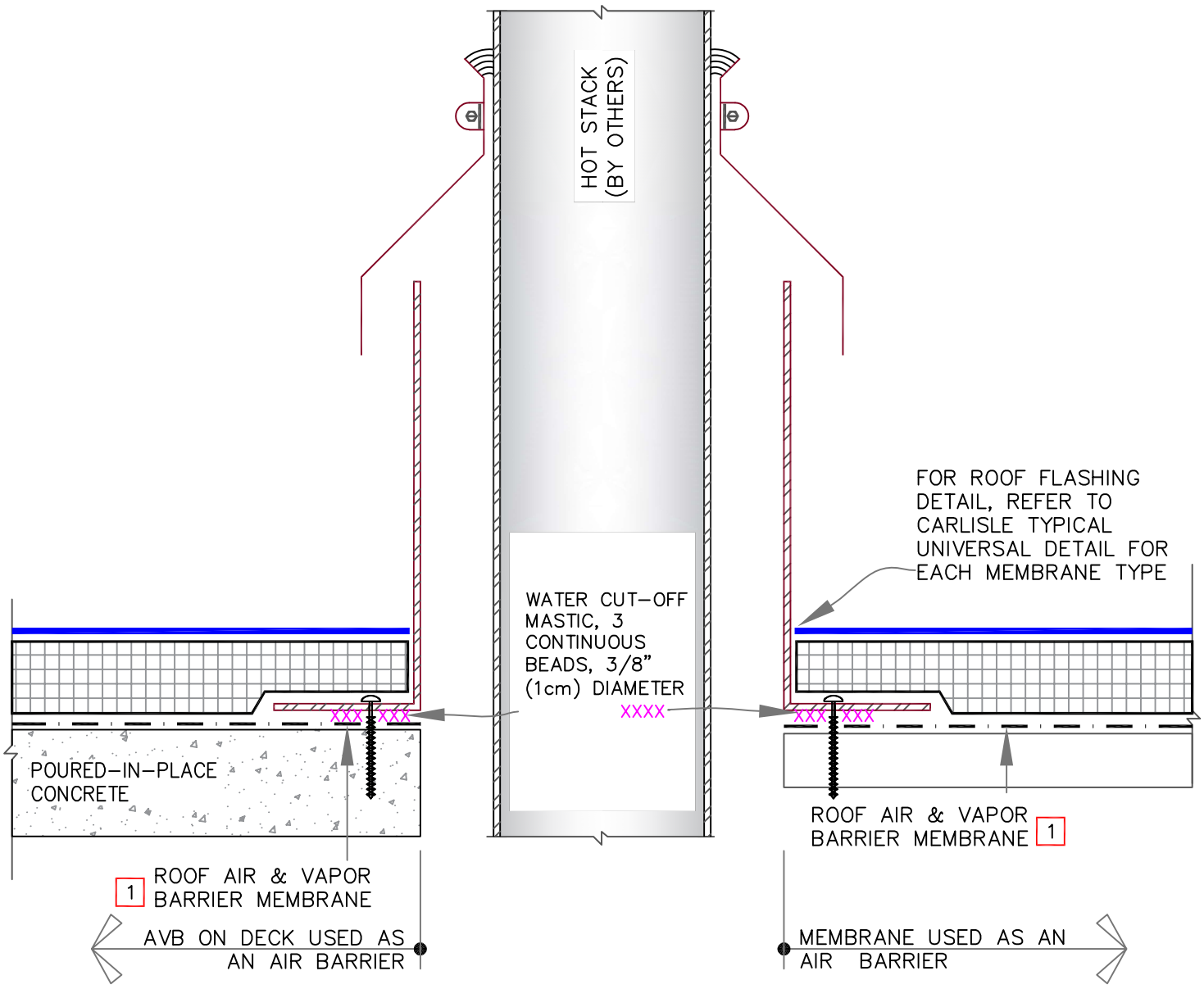

NOTES:

1. ON STEEL DECKS DIRECTLY ADHERE VapAir Seal MD. USE VapAir Seal 725TR ON CONCRETE & WOOD DECKS OR DECKS WITH APPROVED COVER BOARDS.

See sheets V-0.1 to V-0.7 & Specs for additional information

VERSICO ROOFING SYSTEMS

© 2023 VERSICO

HOT STACK AIR FLASHING – OPTION B

NEW MEMBRANE
EXISTING MEMBRANE
INSULATION
0 SEE NOTE(S)

VENT SECURED ROOFING SYSTEM

V-8.5B

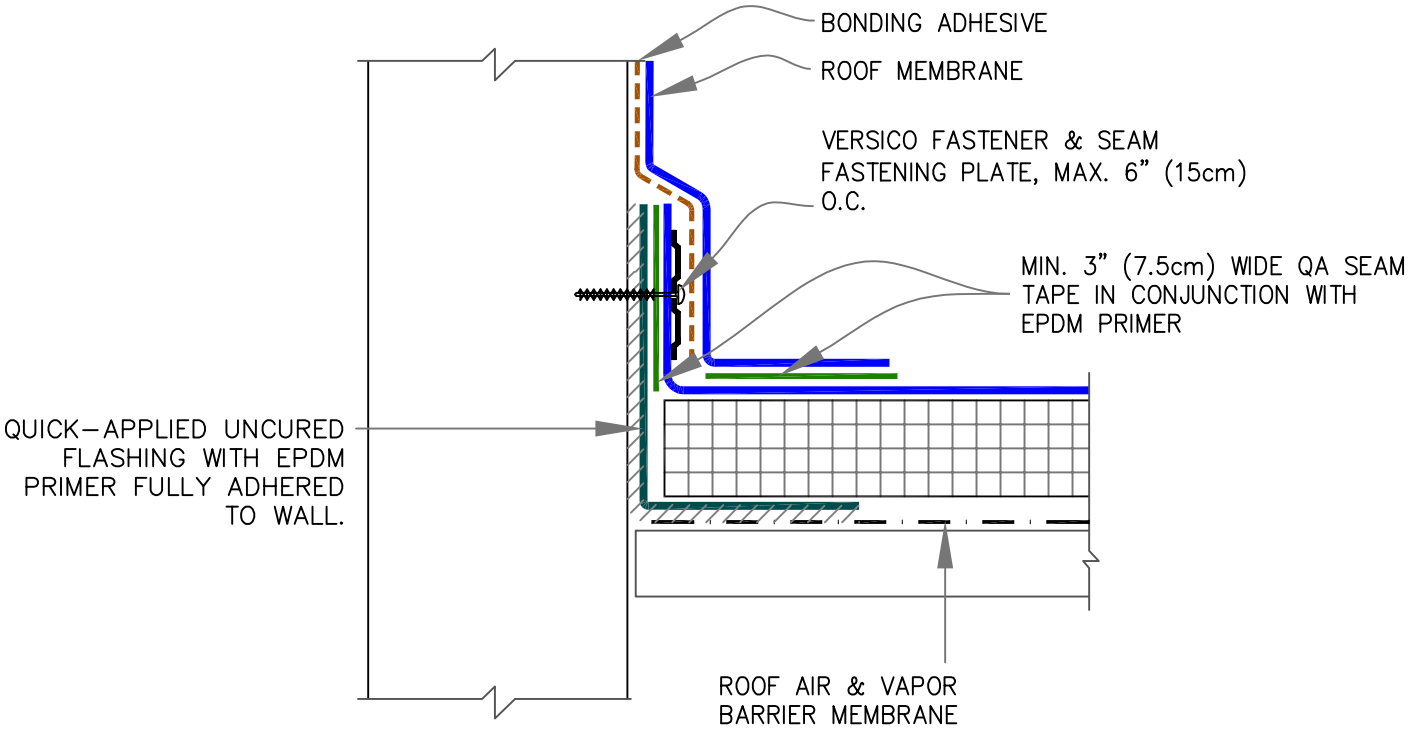

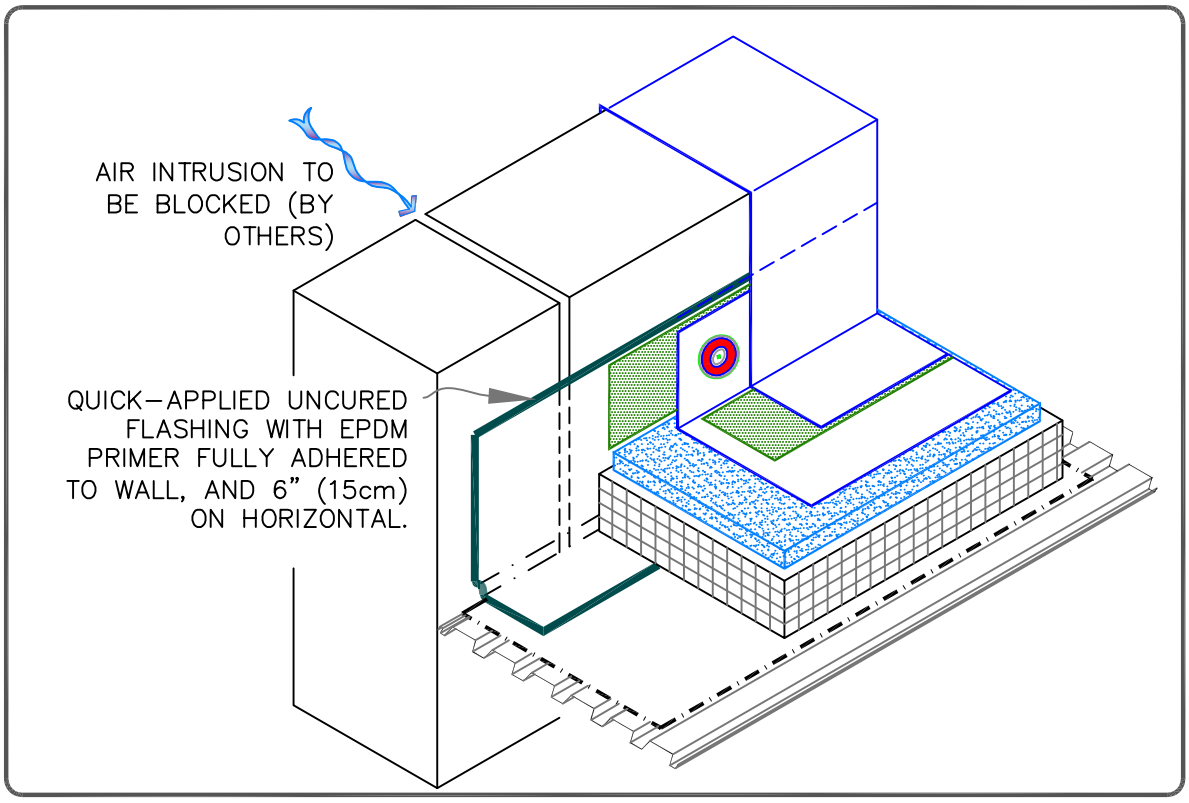

See sheets V–0.1 to V–0.7 & Specs for additional information

VERSICO ROOFING SYSTEMS
© 2023 VERSICO

PARAPET WITH MEMBRANE AIR BARRIER

NEW MEMBRANE
EXISTING MEMBRANE
INSULATION
0 SEE NOTE(S)

VENT SECURED ROOFING SYSTEM

V–12.1

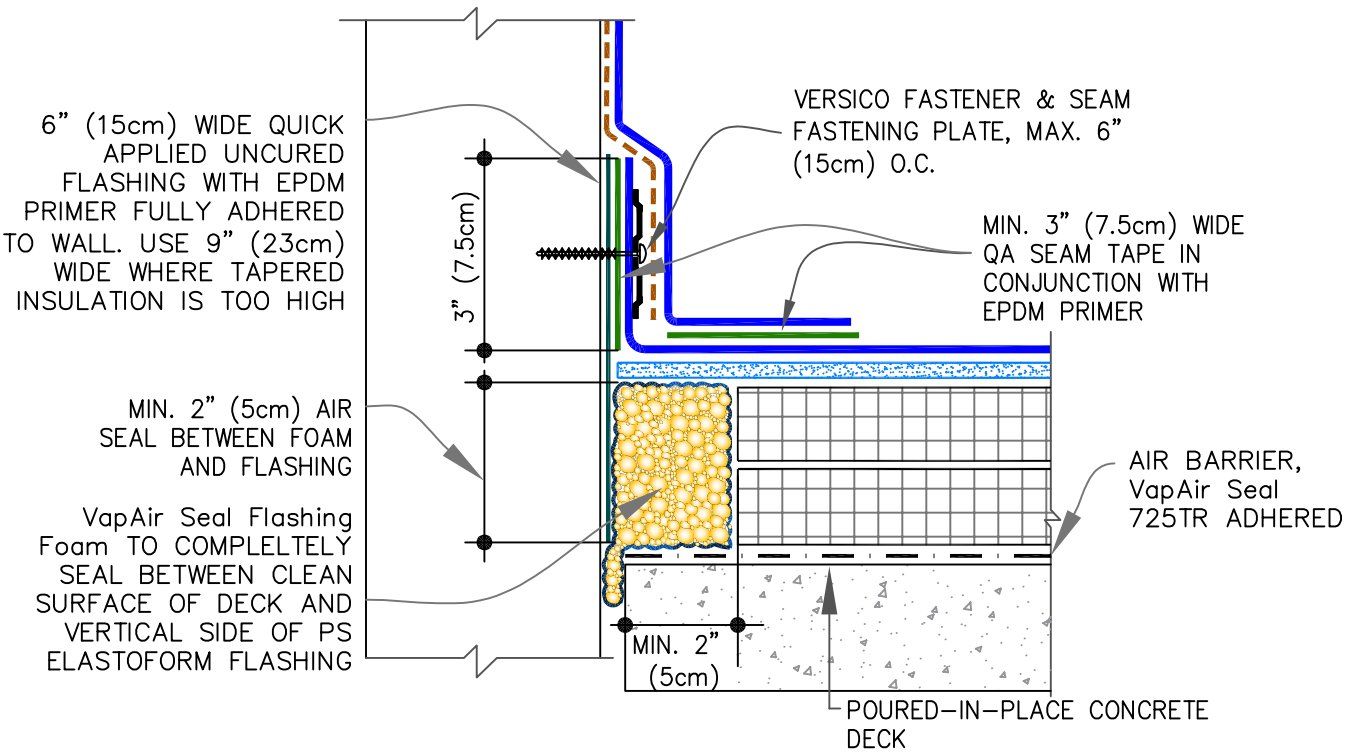

A OPTION: AIR SEALING WITH FOAM

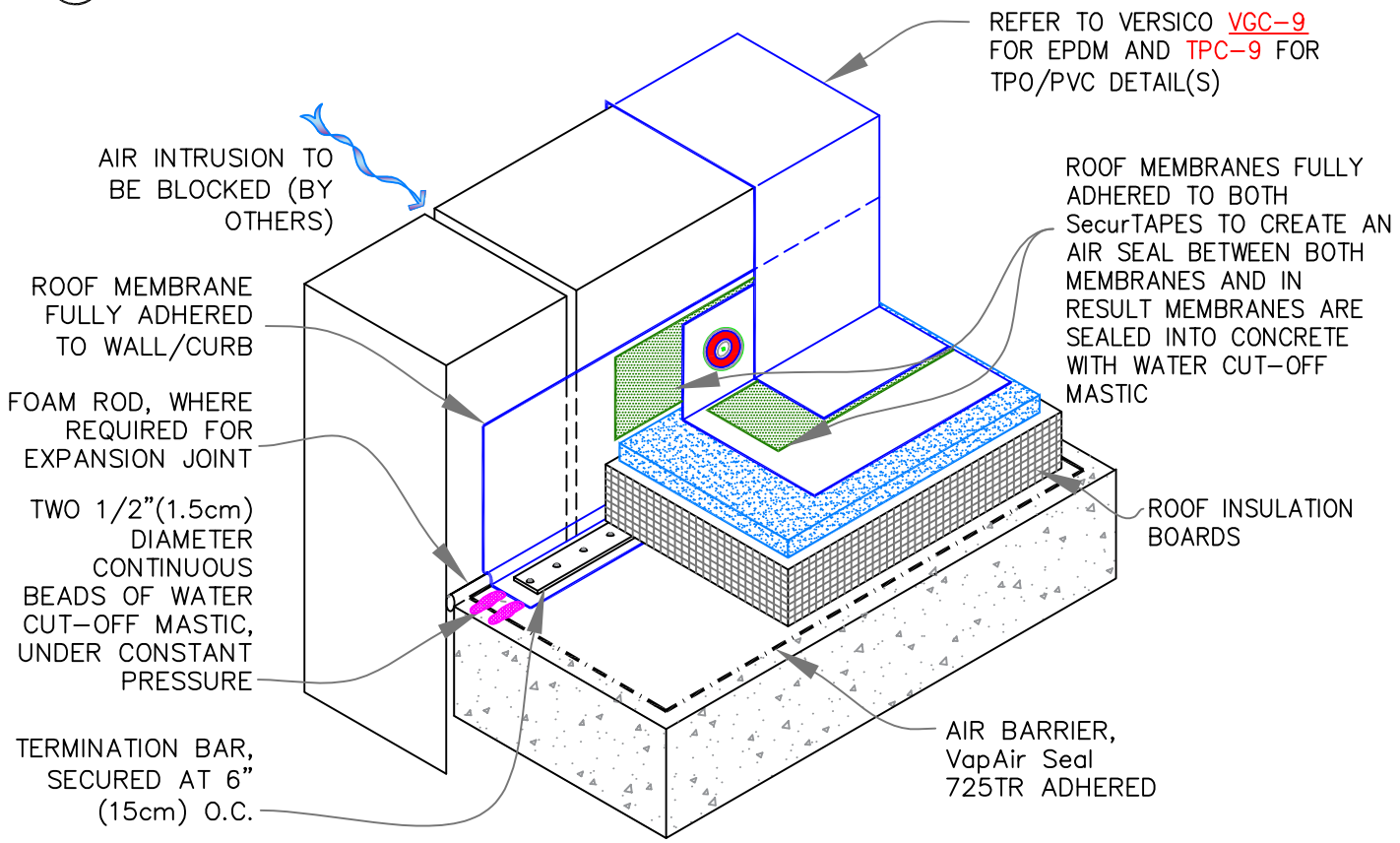

B OPTION: AIR SEALING WITH MEMBRANE FLASHING

See sheets V-0.1 to V-0.7 & Specs for additional information

VERSICO ROOFING SYSTEMS
© 2023 VERSICO

PARAPET / CURB: CONCRETE/LIGHTWEIGHT CONCRETE USED AS AN AIR BARRIER

NEW MEMBRANE
EXISTING MEMBRANE
INSULATION
0 SEE NOTE(S)

VENT SECURED ROOFING SYSTEM

V-12.2

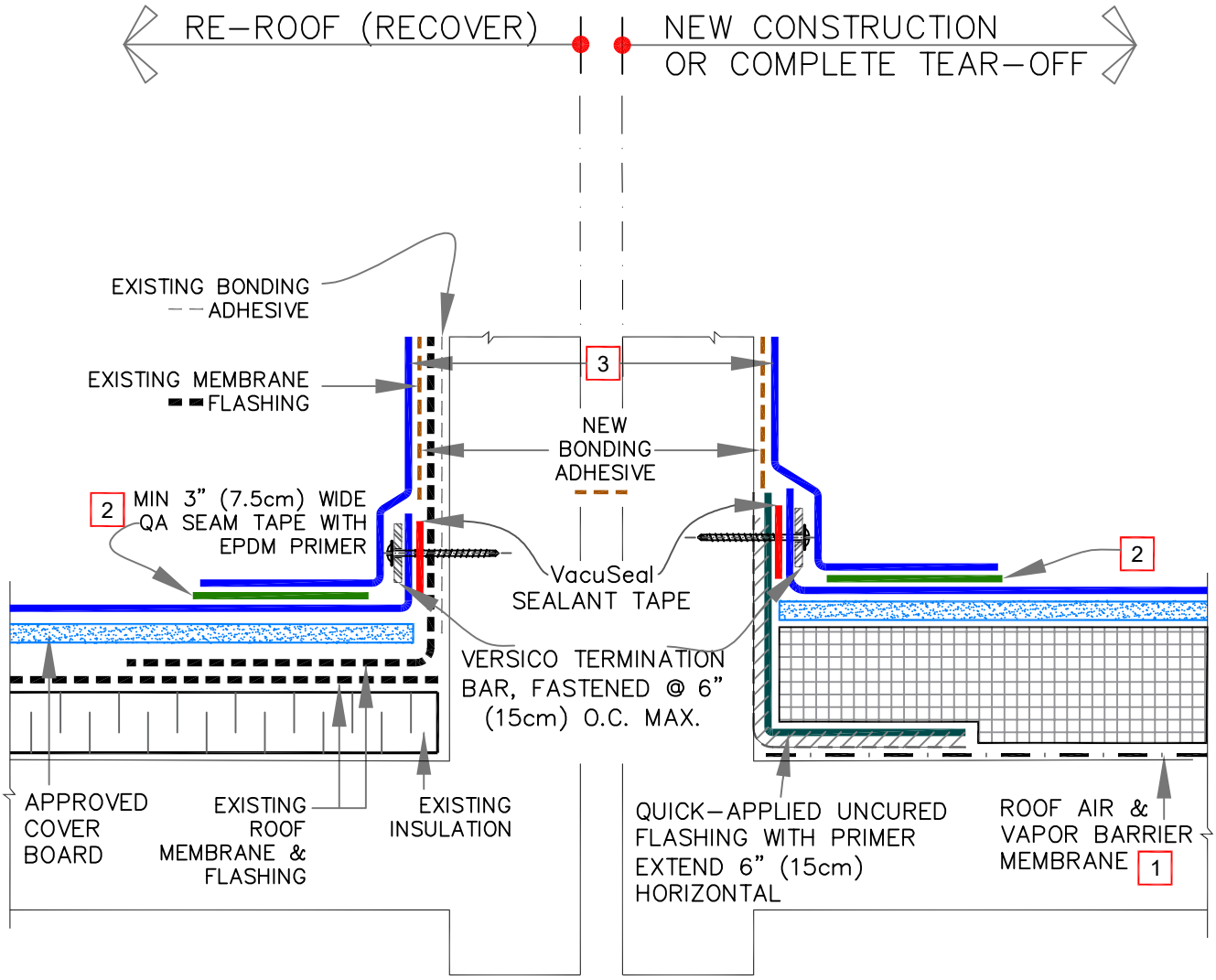

NOTES:

1. ON STEEL DECKS DIRECTLY ADHERE VERSICO VapAir Seal MD. USE VERSICO VapAir Seal 725TR ON CONCRETE & WOOD DECKS OR DECKS WITH APPROVED COVER BOARDS.

2. FOR ADDITIONAL INFORMATION, REFER TO VERSICO'S THERMOSET DETAIL VGC–5.1 FOR EPDM AND THERMOPLASTIC DETAIL TPC–5.1 FOR TPO/PVC.

3. SELF–ADHERING EPDM CURB WRAP MAY BE SUBSTITUTED AS FLASHING ON EPDM ROOFS.

See sheets V–0.1 to V–0.7 & Specs for additional information

VERSICO ROOFING SYSTEMS
© 2023 VERSICO

PARAPET OR WALL – NEW CONSTRUCTION AND RE–ROOF (RECOVER)

NEW MEMBRANE
EXISTING MEMBRANE
INSULATION
0 SEE NOTE(S)

VENT SECURED ROOFING SYSTEM

V–12.3

End of Section

Copyright 2024 Versico

Versico, VersiGard, Flexible DASH and VacuSeal are Trademarks of Versico

This specification represents the applicable information available at the time of its publication. Owners, specifiers and Versico authorized roofing contractors should consult Versico or their Versico Independent Sales Representative for any information, which has subsequently been made available.

Review the appropriate Versico warranty for specific warranty coverage, terms, conditions and limitations.

SPECIFICATION
SUPPLEMENT

G-14-21

DeckVent Roof Assembly for Lightweight Structural Concrete Decks
Adhered, Ballasted or Induction Welding Attachment Method

January 2024

The information contained in this supplement serves as a criteria for Specifiers and Authorized Contractors regarding the design and installation of Versico Roofing Systems and use of DeckVent EPS and roof vents for roofing assembly installations over newly poured lightweight structural concrete decks (after achievement of full structural strength) or for retro-fitting (with tear off) over existing structural concrete deck. In addition to the information contained herein, attached details are included to provide the Specifiers and Authorized Contractors with quick access to specific information. Specifiers and Authorized Contractors are advised to reference all applicable details included with this spec supplement.

The assembly described herein includes DeckVent EPS and Versico SecurShield Polyiso or Securshield Polyiso HD, one-way and two-way roof vents, in addition to any of the Versico Single-ply membranes (EPDM, TPO or PVC) **(60-mil thick minimum)**.

A. Description

The roofing assembly incorporates the DeckVent EPS insulation directly over lightweight structural concrete deck with the subsequent layer(s) of SecurShield Polyiso Insulation or SecurShield Polyiso HD Cover Board.

With any of the membranes listed below, one-way roof vents are required at the rate of 1 per 2,000 SF and shall be positioned closer to the perimeter and two-way roof vents in the field of the roof at the rate of 1 per 8,000 SF. For projects with individual roof sections less than 2,000 SF, Contact Versico for vent number recommendations, also refer to appropriate detail for recommended locations.

Regardless of the membrane attachment method, Adhered, Induction Welded or Ballasted, a continuous air seal must be provided by sealing any gaps or joints at walls, around penetrations, roof projections and around roof drains. Refer to appropriate detail at the end of this document.

1. Adhered Assemblies – Using EPDM, TPO or PVC, the DeckVent EPS Insulation may be fastened directly to the structural deck at a rate of 1 fastener and plate per 4 SF. With subsequent layers of insulation or coverboard set in Flexible DASH bead adhesive at 6” O.C. The membrane shall be fully adhered using the appropriate bonding adhesive per Versico’s Thermoset or Thermoplastic Specification.

NOTE: In lieu of fastening and adhering individual layers of insulation, fasteners may be secured through all layers of insulation directly to concrete deck.

2. Induction Welded Assemblies – Using TPO or PVC, the DeckVent EPS Insulation is overlaid with SecurShield Polyiso or SecurShield Polyiso HD, Versico’s CD-10 or MP-14-10 fastener and TPO or PVC Induction Welding Plates are used to secure both layers to the structural deck. The fastening density of the plates and fasteners shall be in compliance the Induction Welding Attachment (Attachment I) of the Thermoplastic Specification.

3. Ballasted Assemblies – This option which is only available with VersiGard EPDM. Loose-lay the DeckVent EPS and the Securshield Polyiso, directly over the concrete deck. If insulation securement is specified (not required for Versico warranty) it must be accomplished by mechanically fastening the DeckVent EPS and adhering the subsequent layer(s) of SecurShield Insulation. Consult the Versico published Specification for Ballasted Roof Assemblies, for additional requirements not listed herein.

VERSICO
ROOFING SYSTEMS

Any of the assemblies described herein, using 60-mil membrane, are eligible for a 5, 10, 15 or 20 Year Membrane System Warranty and Warranty wind speed up to 72 mph. For higher wind speed coverage, project may be submitted to Versico for Approval.

NOTE: This system is not for use on Cold Storage/Freezer Buildings. Such projects may be submitted to Versico for other design options.

B. Quality Assurance

1. The specified roofing system must be installed by a Versico Authorized Roofing Contractor in compliance with drawings and specifications as approved by Versico.

2. Do not install this assembly before the concrete deck has reached its' initial structural strength. Project Engineer must be consulted prior to job start-up.

C. Submittals

1. Shop drawings must be submitted to Versico by the Versico Authorized Roofing Contractor along with a completely executed Copy-A Job Approval Request for approval. Approved shop drawings are required for inspection of the roof and on projects where on-site technical assistance is requested.

2. Upon completion of the installed work, submit copies of the manufacturer's final inspection to the specifier prior to the issuance of the manufacturer's warranty.

D. Products

Products listed in "Part II" of the Versico Thermoset/Thermoplastic Roofing System Specification can be used as part of the DeckVent Roofing System.

1. **DeckVent EPS**: A 4' x 4' x 2" thick, closed cell, expanded polystyrene (Type IX - 1.8 pcf (min.) nominal density) board with 5/8" wide channels routed, bi-directionally, on the bottom facer. The 2" thick board has an R-Value of 7.1.

2. **One- and Two-Way Pressure Relief Vent**: Heavy-gauge spun aluminum vent are engineered to reduce moisture within the roofing system and release trapped air pressure within the building. Base diameter 11", Stack diameter at base of 5" and overall height of 8". For identification purposes, One-Way Pressure Relief vent is marked with a single dimple on the top (cap) versus two dimples for the two-way pressure relief vents.

3. **Flexible DASH Adhesive:** A bead-applied, two-component polyurethane, construction grade, low-rise expanding foam adhesive used for attaching approved insulations to other approved insulations and coverboards. Also may be used to fill voids between deck to wall junctions and around pipe penetrations.

4. **VapAir Seal Flashing Foam –** a low pressure foam system that utilizes a non-flammable blowing agent. The foam is used to seal penetrations and reduce air leakage, especially at roof perimeters.

5. **VersiGard (black or white) Quick-Applied Uncured Flashing:** A 6" X 100' and 9" or 12" wide by 50' long, 60-mil thick VersiGard (black) or VersiGard White **uncured** EPDM Flashing laminated to a 30-mil Quick-Applied Tape (QAT) used in conjunction with EPDM/TPO/PVC Primer.

   VersiGard/VersiGard White Quick-Applied Uncured Flashing is used to flash one-way and two-way roof vents.

6. **VersiFlex PVC non-reinforced Flashing** is 80-mil thick (white on gray) and available in rolls **12" and 24" wide by 50' long**. Flashing is used for field fabricated flashings for one-way and two-way roof vents.

7. **RhinoBond or Isoweld TPO or PVC Welding Plate**: A 3" diameter, 0.028" thick, corrosion-resistant steel plate with hot melt coating on the top surface. The plate is used in conjunction with Versico's HP-X Fasteners to attach the roofing assembly and is activated using the RhinoBond or Isoweld Induction Welding Tool.

8. **VersiGard or VersiGard White Quick Applied (QA) Seam Tape:** A 3" or 6" wide by 100' long splice tape used for attaching the one-way and two-way roof vents to the membrane before flashing the vent.

9. For other products needed to complete roof assembly, SecurShield Polyiso and Securshield Polyiso HD, refer to listings in Part II of the Thermoset and Thermoplastic Specification.

E. Execution

Follow current specifications for installing roof membranes and seaming per specific membrane. [VersiGard (EPDM), VersiWeld (TPO) or VersiFlex (PVC)].

1. **General**

   a. When feasible, begin the application at the highest point of the highest roof level and work to the lowest point to prevent moisture infiltration and minimize construction traffic on completed sections. This will include completion of all flashings and terminations.

2. **Roof Deck Criteria and Preparation**

   a. Roofing Assembly described herein intended for use on newly poured structural concrete decks (normal and lightweight) once they have reached their designed structural strength.

   b. Surface imperfections, fins or cracks, must be documented and reported to the specifier, general contractor and building owner for assessment. The Versico Authorized Roofing Contractor shall not proceed unless the defects are corrected.

   c. The substrate must be free of debris, foreign materials and must be free of accumulated water, ice, snow or frost.

   d. Cracks or voids in the substrate greater than 1/4" must be filled with Flexible DASH Adhesive, VapAir Seal Flashing Foam or urethane sealant (by others).

   e. For Deck-to-Wall Junctions and roof penetrations, fill gap with foam backer rod and Flexible DASH Adhesive, VapAir Seal Flashing Foam or urethane sealant (by others). Refer to **Detail MM-2**.

F. Installation

1. Follow guidelines above for the installation and air sealing of roof deck perimeters and penetrations.

2. Proceed with installation roofing system as described in this section and in accordance with Versico published Specifications for the specific membrane type.

3. After installation of the roofing membrane, mark locations for one-way and two-way roof vents. And cut a 5” diameter core through membrane and insulating material down to the concrete deck. Remove excess material.

4. Place the One-Way and Two-Way Roof Vents centered over void. Follow applicable details depending on type of membrane used. Flash One-Way and Two-Way Roof Vent per requirements outlined in the detail.

5. Repeat procedure at each vent location to comply with the required number of vents needed.

6. Complete all other flashing details per specification for membrane type used, refer to Versico published

specifications.

G. Associated Installation Details

Roof Assemblies Page 1 ..... DV-1
Roof Assemblies Page 2 ..... DV-2
Roof Assemblies Page 3 ..... DV-3
Air Seal Detail: Roof-To-Wall & Pipe Penetration DV-4
Vent Flashing Adhered or Induction Welded Assemblies DV-5
Vent Flashing for Ballasted EPDM Assembly DV-6
Roof Plan – Typical Layout of Vents DV-7
3D Roof Plan – Typical Layout of Vents DV-8
Primary Vent (VacuSeal Vent – Concrete Level) DV-9
Secondary Vent (VacuSeal Vent – Membrane Level) DV-10

End of Section

Copyright 2024 Versico Roofing Systems
Versico, DeckVent, VersiGard, VersiWeld and VeriFlex are Trademarks of Versico Roofing Systems

This specification represents the applicable information available at the time of its publication. Owners, specifiers and Versico Authorized Roofing Contractors should consult Versico or their Versico Manufacturer's Representative for any information, which has subsequently been made available.

Review the appropriate Versico warranty for specific warranty coverage, terms, conditions and limitations.

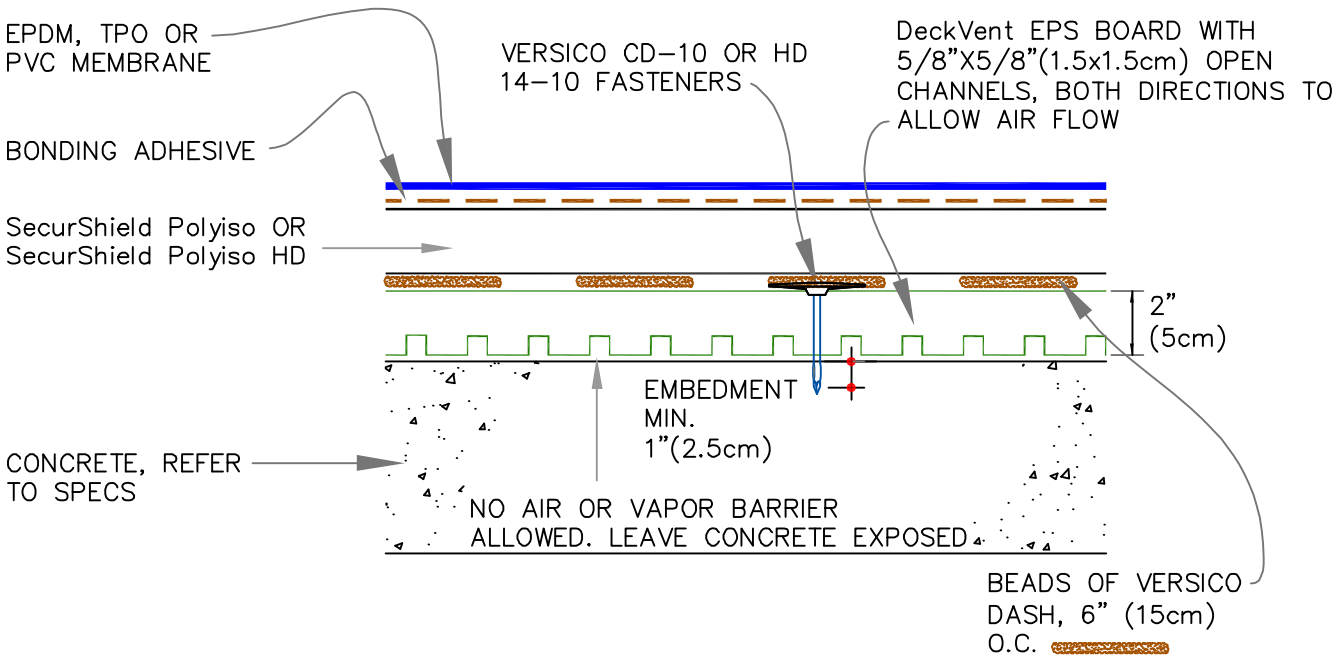

A FULLY ADHERED ROOF
MECHANICALLY FASTENED BOTTOM LAYER ONLY

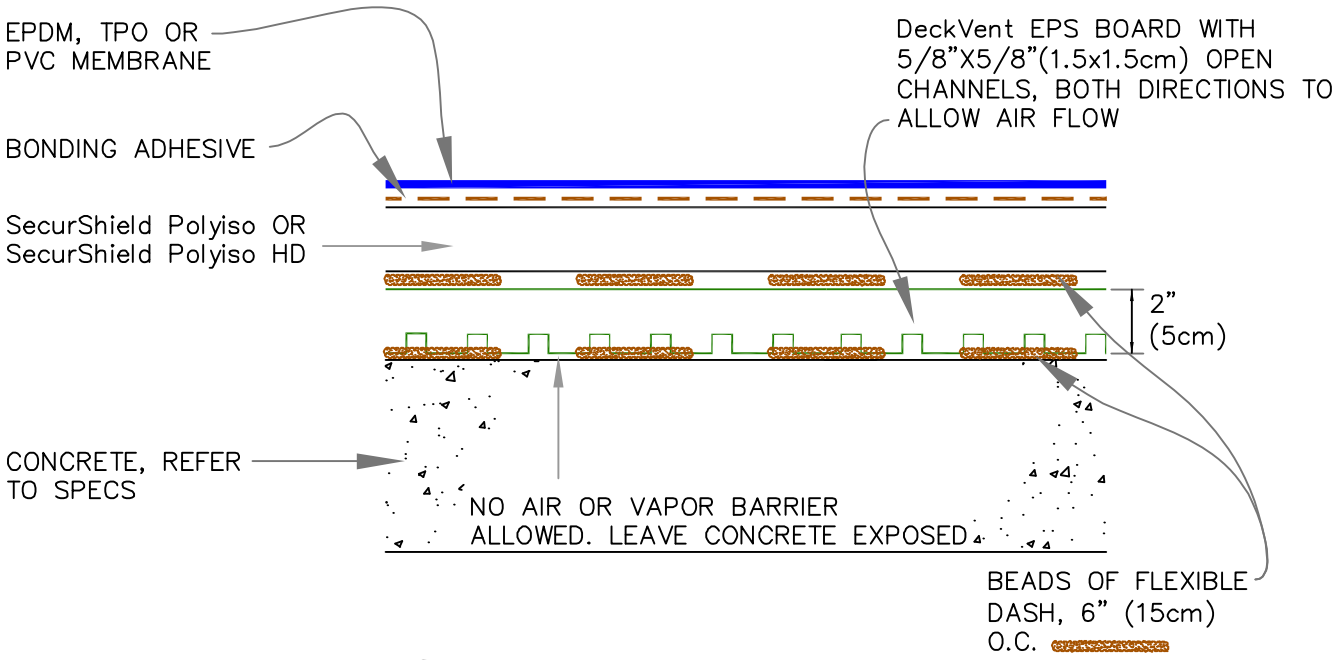

B FULLY ADHERED ROOF

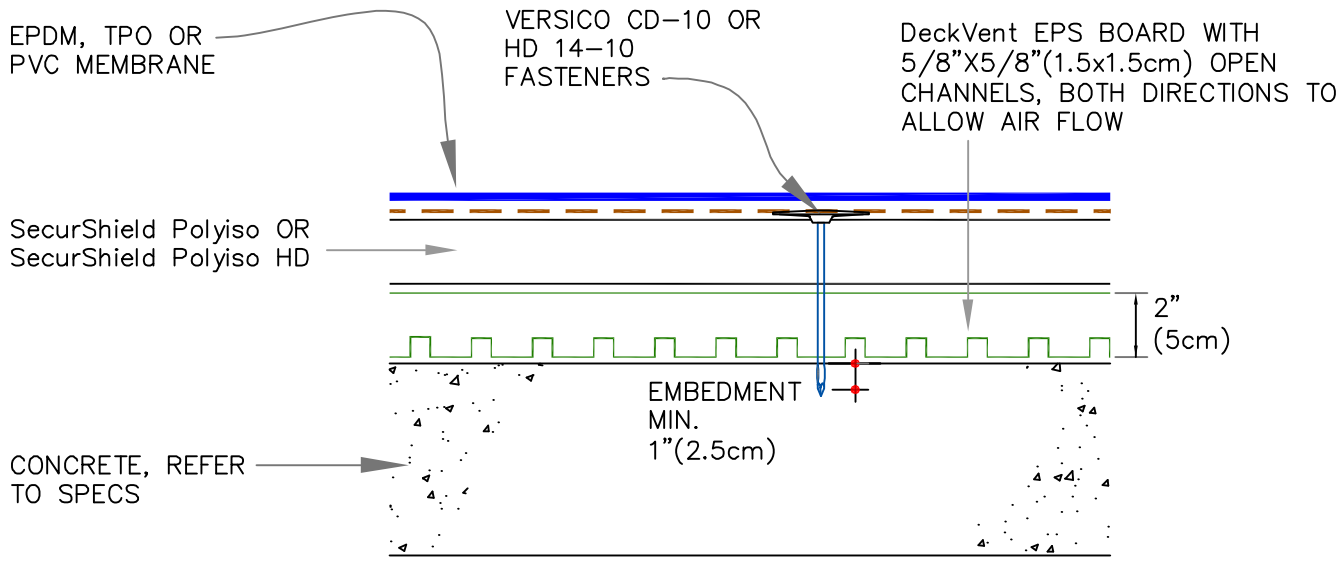

C FULLY ADHERED ROOF
MECHANICALLY FASTENED ALL LAYERS

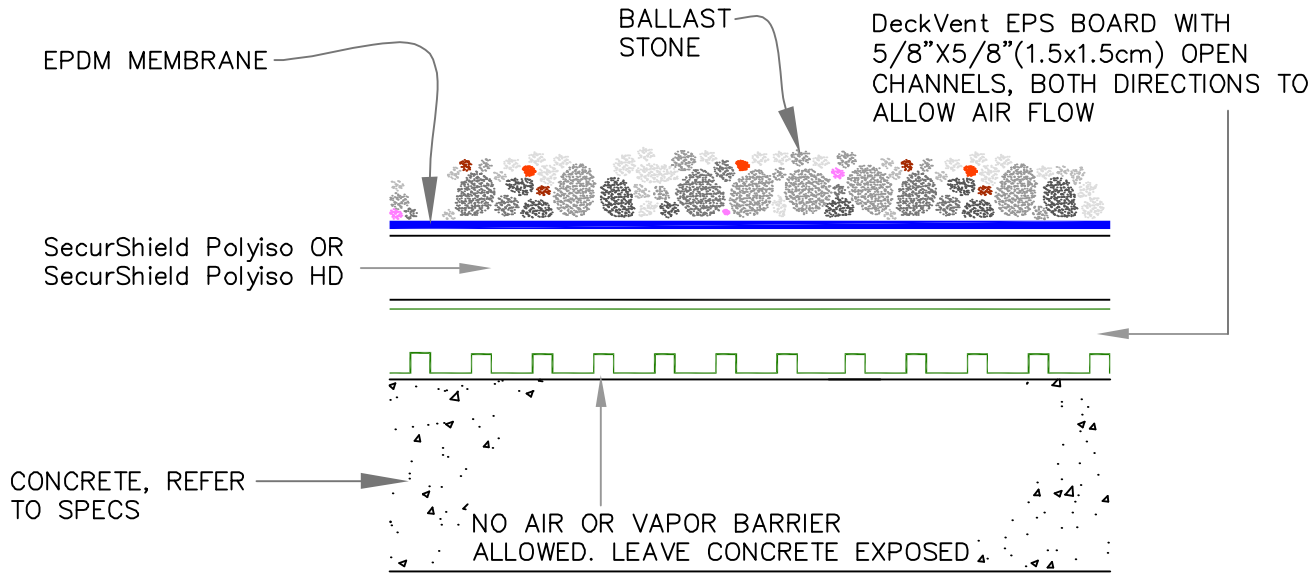

D BALLASTED EPDM ASSEMBLY

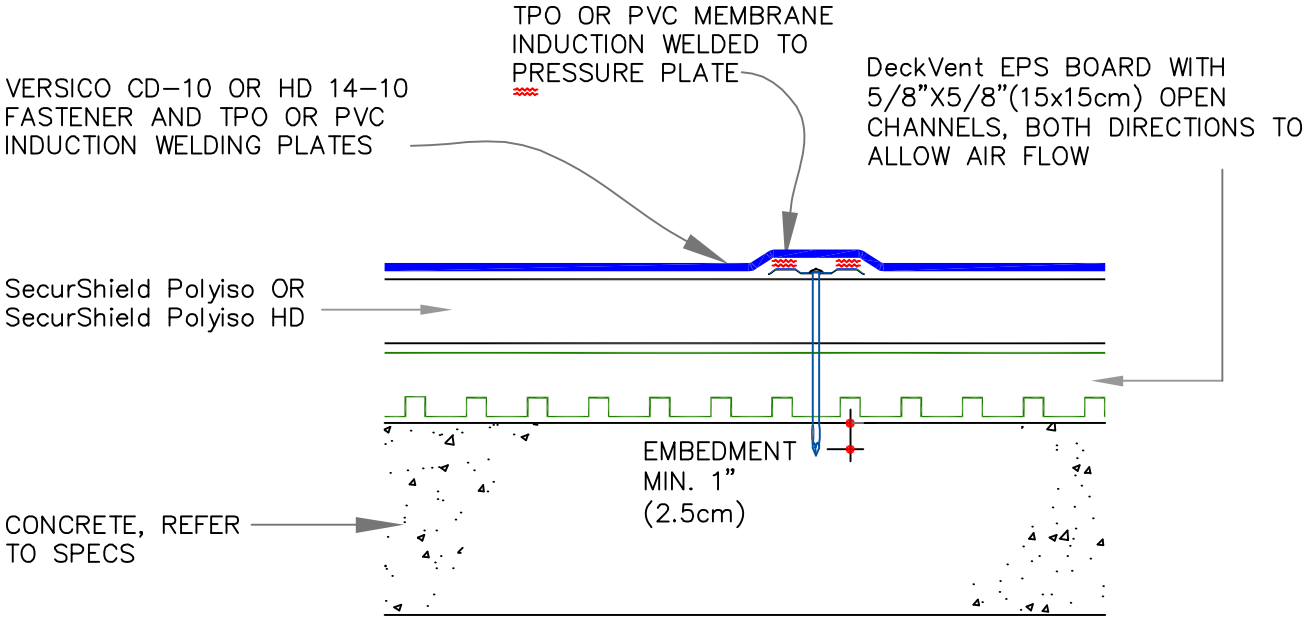

E TPO OR PVC INDUCTION WELDED ASSEMBLY

NOTE:

1. ENSURE CONCRETE EDGES ARE DRY, PRIOR TO SEALANT INSTALLATION.

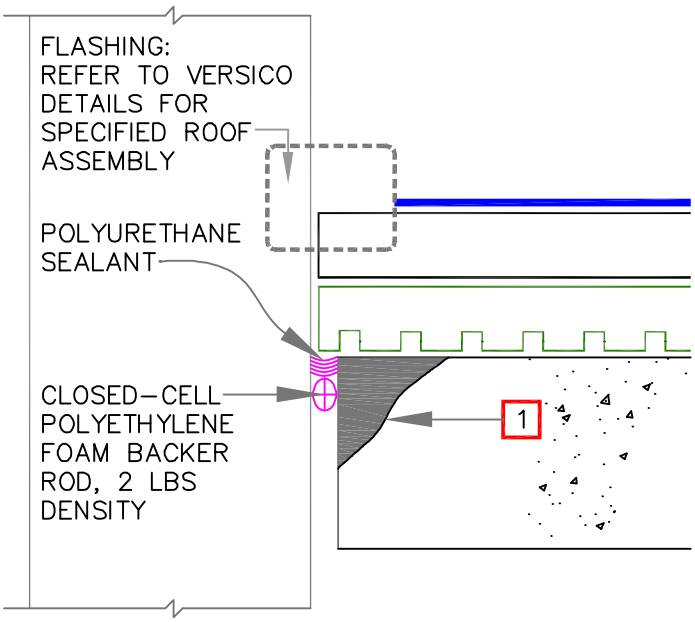

A AIR SEAL : ROOF–TO–WALL

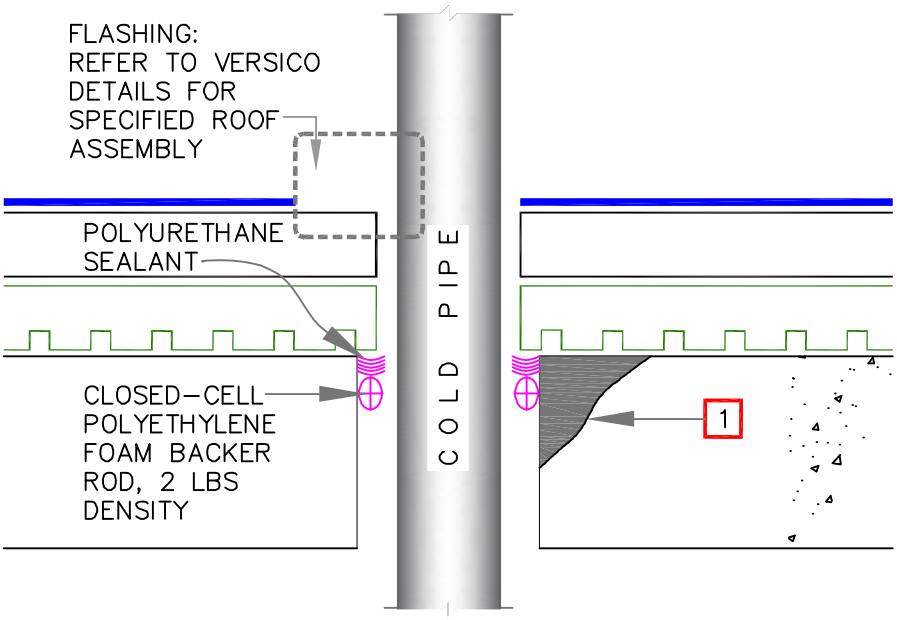

NOTE:

1. ENSURE CONCRETE EDGES ARE DRY, PRIOR TO SEALANT INSTALLATION.

B AIR SEAL : PIPE PENETRATION

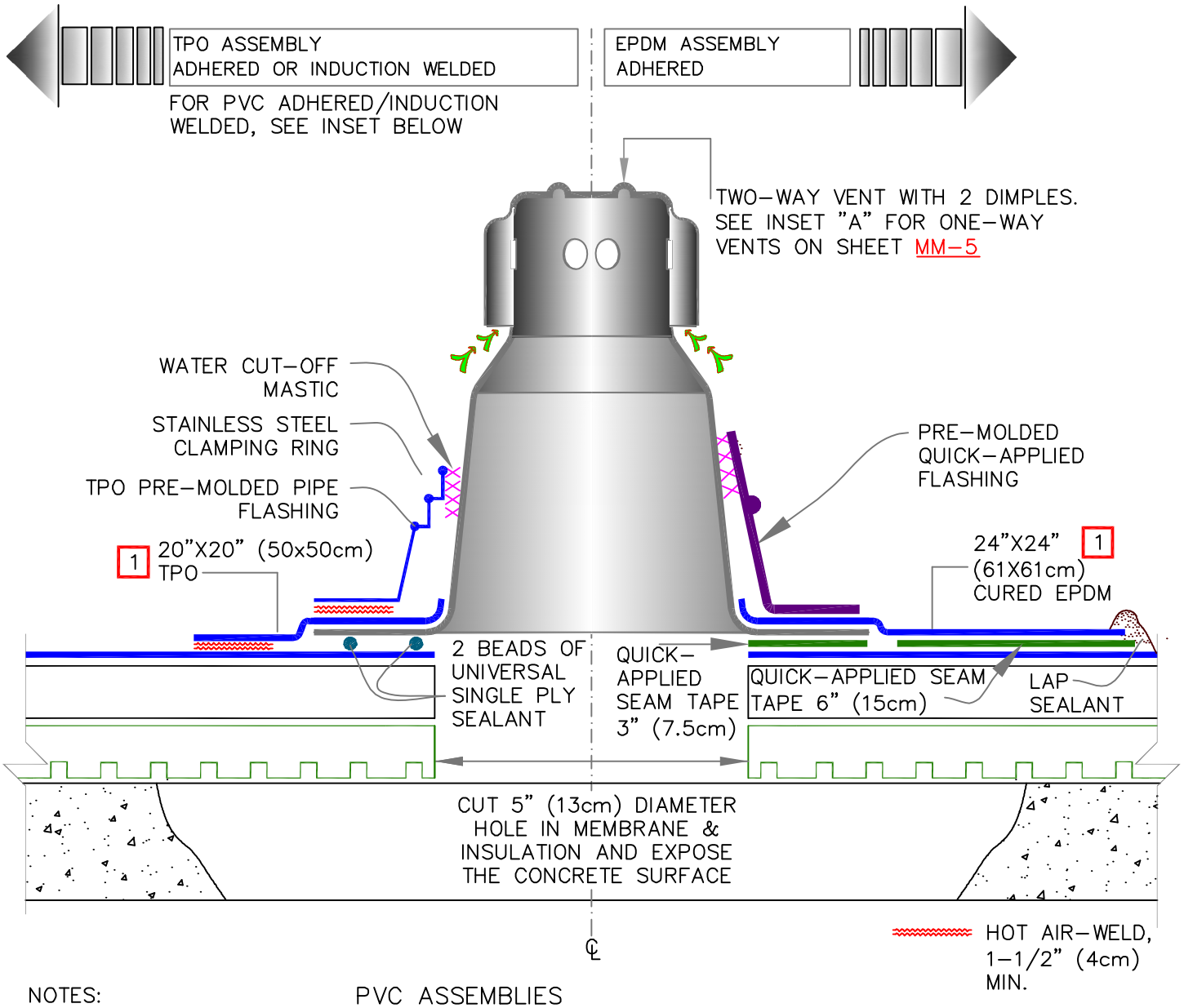

NOTES:

1. CUT SQUARE PIECE, TRIM ROUNDED EDGES, DRAW CENTER LINES AND CUT A 5–1/2" (14cm) DIAMETER HOLE AT THE CENTER OF PIECE. SLIDE THE PIECE THROUGH THE VENT.

2. PRIMER MUST BE APPLIED ON ALL SURFACES PRIOR TO ADHESION OF QUICK–APPLIED FLASHING.

PVC ASSEMBLIES
ADHERED OR INDUCTION WELDED

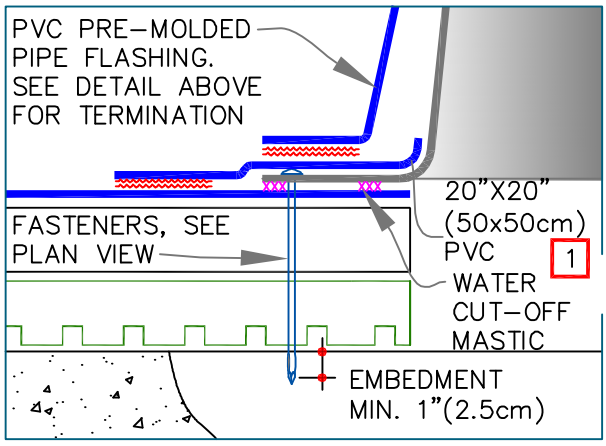

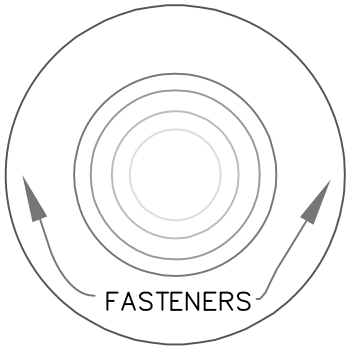

PLAN VIEW

VERSICO ROOFING SYSTEMS
© 2023 VERSICO

VENT FLASHING ADHERED OR INDUCTION WELDED ASSEMBLIES

ROOF MEMBRANE

0 — SEE NOTE(S)

DeckVent

DV–5

NOTES:

1. TRIM ROUNDED EDGES, DRAW CENTER LINES AND CUT A 5–1/2" (14cm) DIAMETER HOLE AT THE CENTER OF PIECE. SLIDE THE PIECE THROUGH THE VENT.

2. PRIMER MUST BE APPLIED ON ALL SURFACES PRIOR TO ADHESION OF QUICK–APPLIED FLASHING.

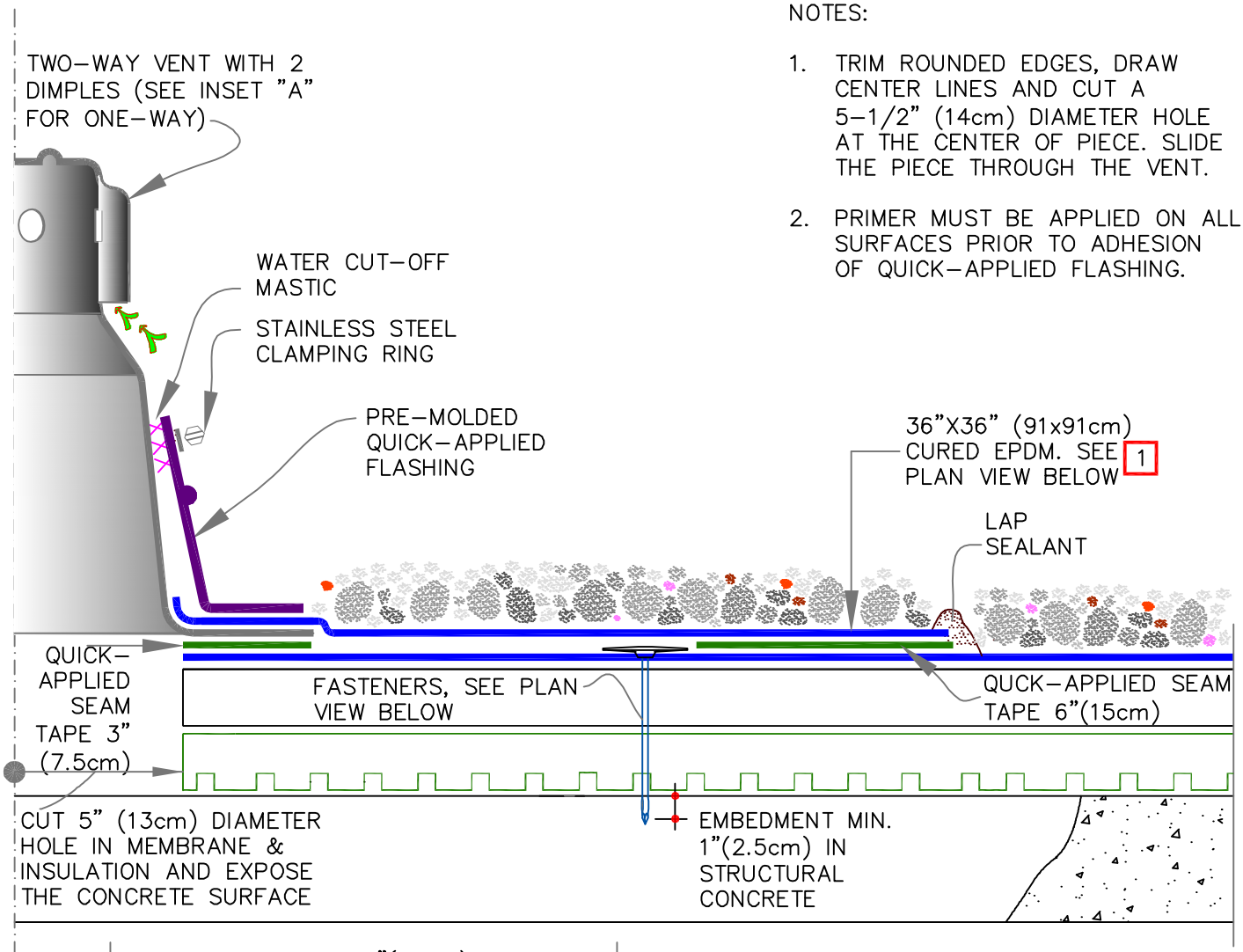

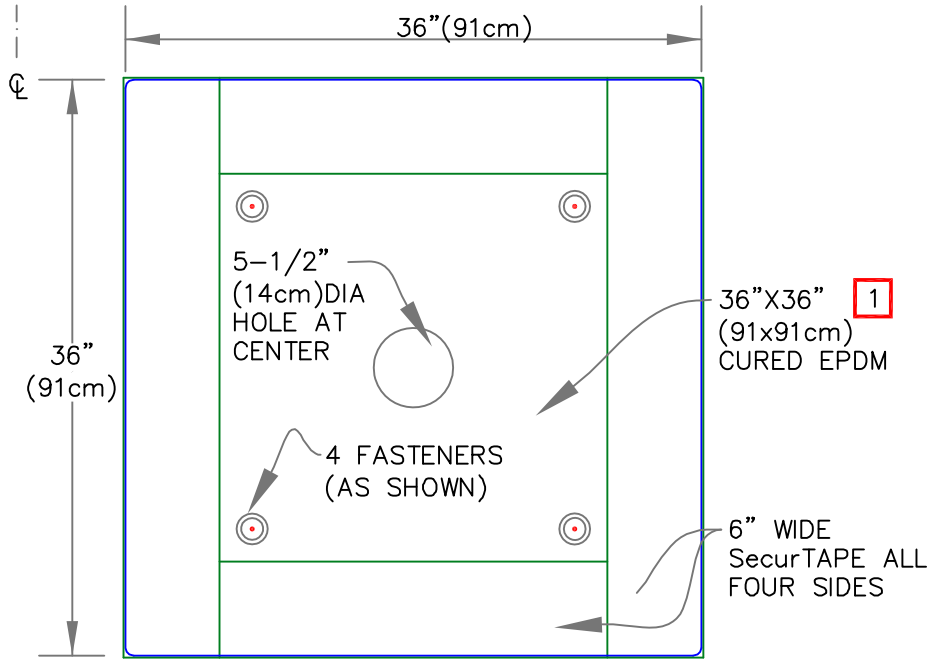

INSET A

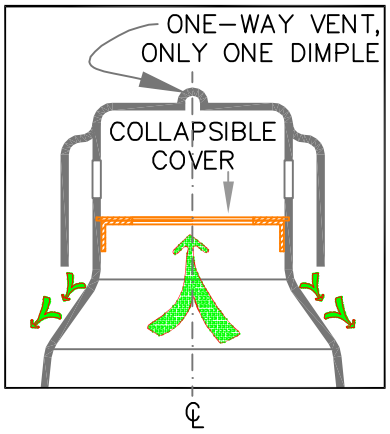

VERSICO ROOFING SYSTEMS
© 2023 VERSICO

VENT FLASHING FOR BALLASTED EPDM ASSEMBLY

→ ROOF MEMBRANE

0 → SEE NOTE(S)

DeckVent

DV–6

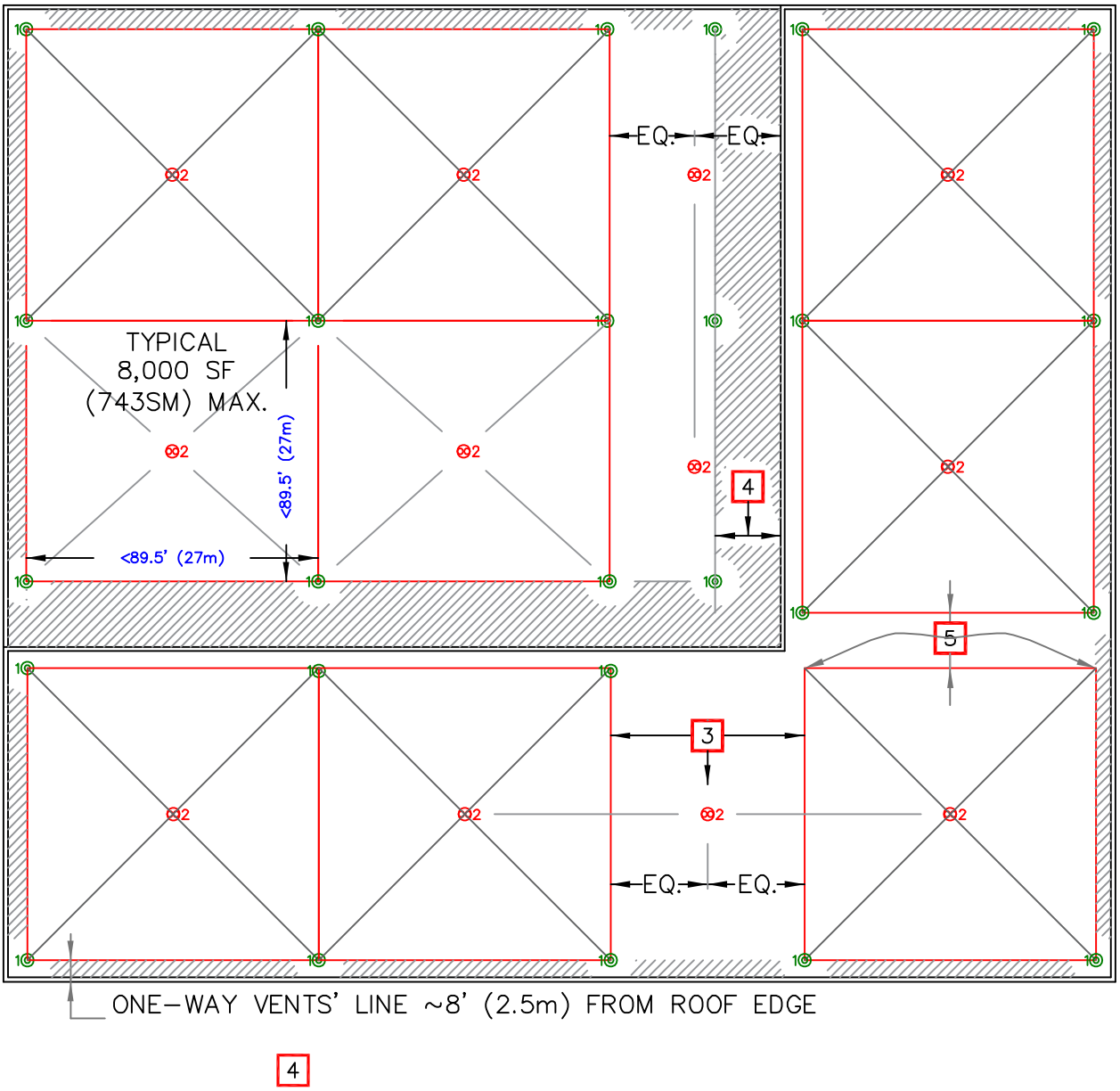

NOTES:

1. ONE–WAY VENTS: ONE EACH FOR 2,000 S.F. (186 S.M) MAX.
2. TWO–WAY VENTS: ONE EACH FOR 8,000 S.F. (743 S.M.) MAX.
3. ADD TWO–WAY VENT UNLESS THIS DIMENSION IS LESS THAN 8' (2.5m)
4. WHEN THERE IS A TALL WALL OR HIGHER BUILDING (SEE KEY PLAN), THEN THE ONE–WAY VENTS' LINE SHOULD BE POSITIONED ~16' (4.9m) FROM HIGH WALL
5. SKIP VENT(S), IF LESS THAN 8' (2.5m)

1◎	ONE–WAY VENT
⊗2	TWO–WAY VENT
———	CENTER LINE
▨	DISTANCE FROM EDGE
EQ.	EQUAL

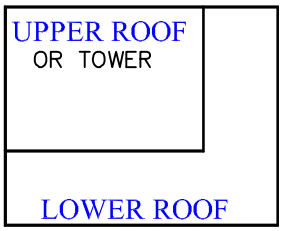

BUILDING KEY PLAN

VERSICO ROOFING SYSTEMS
© 2023 VERSICO

ROOF PLAN – TYPICAL LAYOUT OF VENTS

ROOF MEMBRANE

0 — SEE NOTE(S)

DeckVent

DV–7

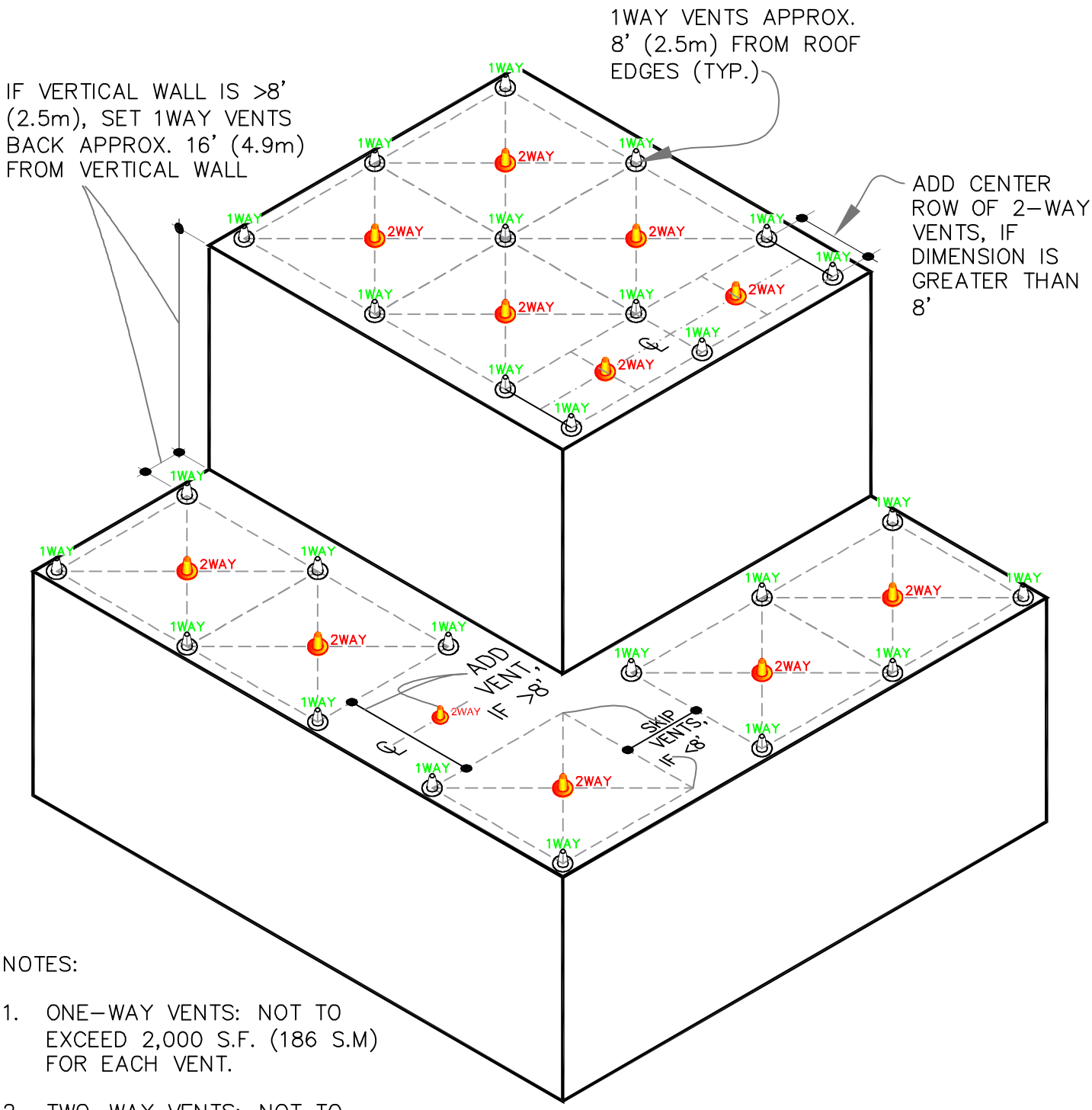

NOTES:

1. ONE-WAY VENTS: NOT TO EXCEED 2,000 S.F. (186 S.M) FOR EACH VENT.
2. TWO-WAY VENTS: NOT TO EXCEED 8,000 S.F. (743 S.M.) FOR EACH VENT
3. COORDINATE WITH VERSICO FOR IRREGULAR ROOF SHAPES OR WHERE DECK SLOPE EXCEEDS 2":12". SUBMIT CAD ROOF PLAN.

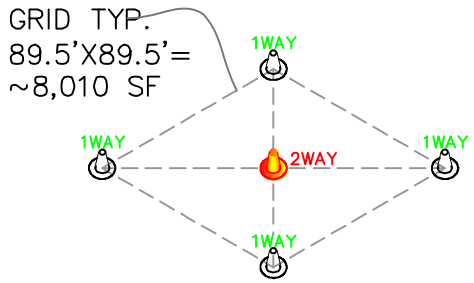

VERSICO ROOFING SYSTEMS
© 2023 VERSICO

3D ROOF PLAN – TYPICAL LAYOUT OF VENTS

→ ROOF MEMBRANE

0 → SEE NOTE(S)

DeckVent

DV–8

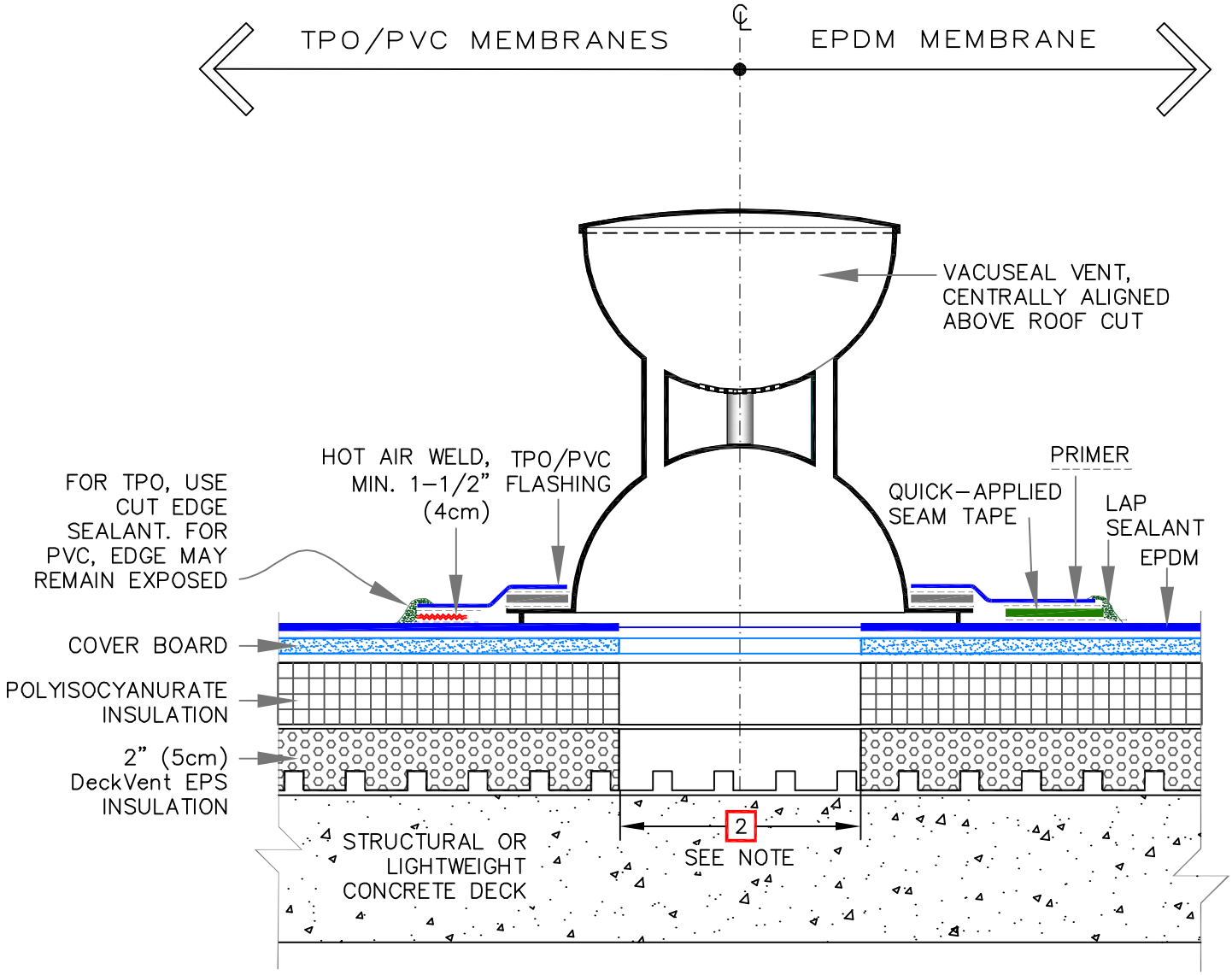

NOTES:

1. SUBMIT A COPY OF ROOF PLAN IN CAD TO VERSICO TO LOCATE VENTS SHOWING ALL PENETRATIONS, HVAC UNITS, HEIGHT OF PARAPET WALLS AND HEIGHT OF ROOF FROM GROUND. EACH VENT WILL COVER APPROXIMATELY 1,200 SQ. FEET (112 SQ. METERS).

2. CORE A 7" (18cm) DIAMETER OR (7"X7"(18x18cm)) HOLE THROUGH THE ROOF ASSEMBLY DOWN TO CONCRETE DECK. EXPOSE THE CONCRETE DECK SURFACE. REMOVE ALL LOOSE DEBRIS COMPLETELY. VACUUM ALL PARTICLES TO ENSURE THAT VENT TUBES & SCREEN WILL NOT BE CLOGGED.

3. THE ROOF ASSEMBLY SHALL BE AIR TIGHT. CONCRETE DECK MUST BE SEALED AROUND ALL PENETRATIONS AND AT ALL DECK TO WALLS/CURBS JUNCTIONS.

VERSICO ROOFING SYSTEMS
© 2023 VERSICO

PRIMARY VENT (VACUSEAL VENT – CONCRETE LEVEL)

→ ROOF MEMBRANE

0 → SEE NOTE(S)

DeckVent

DV–9

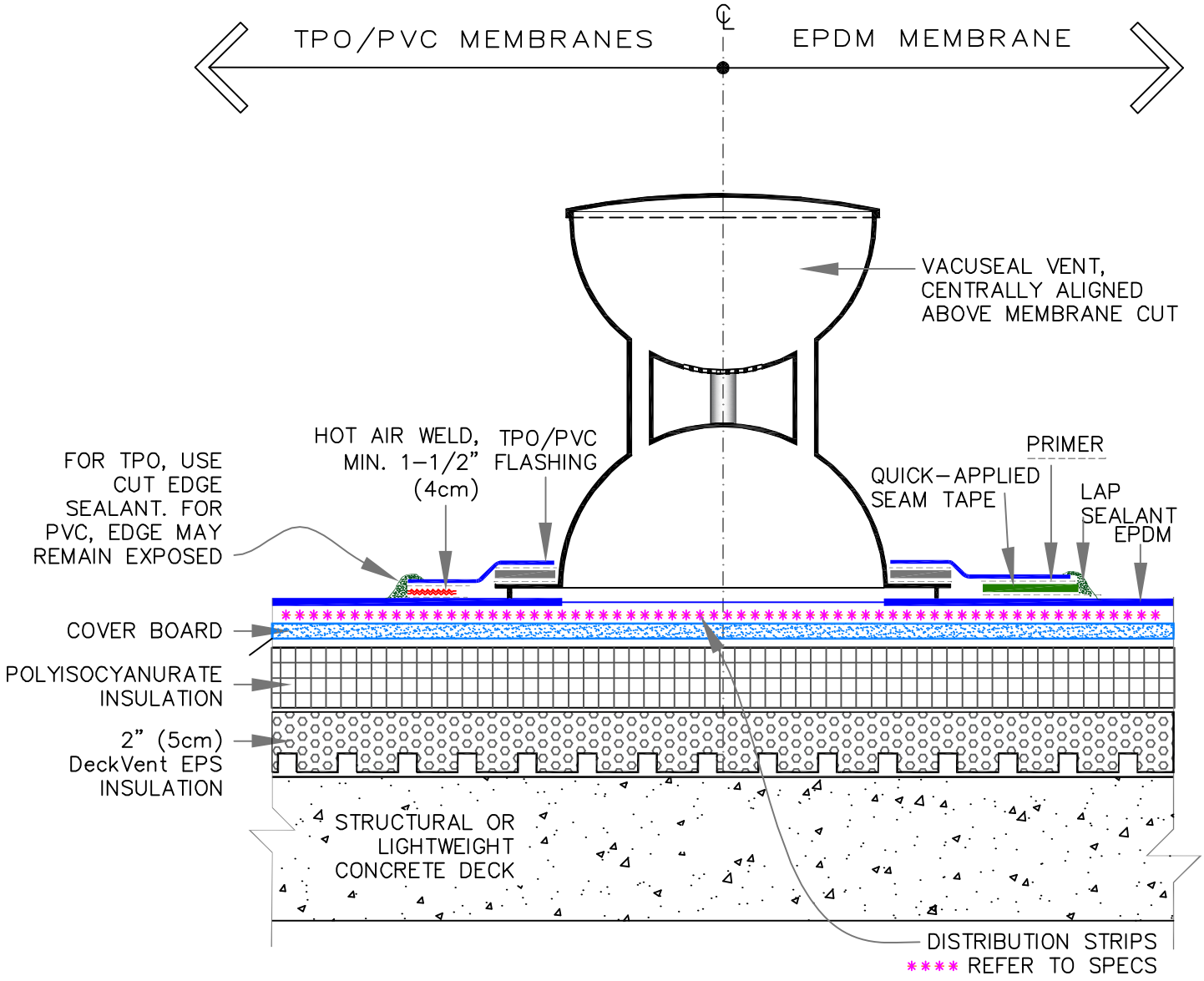

NOTE:

1. TOTAL NUMBER OF VENTS AND LOCATIONS ON THE ROOF WILL BE DETERMINED BY VERSICO. SUBMIT A COPY OF ROOF PLAN IN CAD TO VERSICO TO LOCATE VENTS. DESIGNER MUST SHOW ALL PENETRATIONS, HVAC UNITS, HEIGHT OF PARAPET WALLS AND HEIGHT OF ROOF FROM GROUND.

VERSICO ROOFING SYSTEMS
© 2023 VERSICO

SECONDARY VENT (VACUSEAL VENT – MEMBRANE LEVEL)

→ ROOF MEMBRANE

0 → SEE NOTE(S)

DeckVent

DV–10

SPECIFICATION
SUPPLEMENT

G-15-22

Flexible DASH Adhesive Equipment and Set-Up Requirements for Full Spray, Bead and Splatter Applications

January 2024

The information contained in this supplement serves as a criteria for Specifiers and Authorized Applicators regarding the design and installation of Versico Roofing Systems and related products. Additional information essential for the design and installation of the Roof Systems mentioned herein are also included in the respective Specification for each Roof System and in the Design Reference Section of the Versico Technical Manual. Specifiers and Authorized Applicators are advised to reference all applicable sections.

A. Equipment for Flexible DASH

The following is a list of necessary equipment for application of Flexible DASH Adhesive.

1. **Proportioning Unit (Pump)** - a mechanically operated, high or low pressure metering unit capable of providing 1000 to 2000 psi operating pressure for full spray or 300-500 psi operation for bead application and designed to accurately dispense two component chemical foam systems.

2. **Hoses** (for carrying Part-A and B materials from Proportioning Unit to dispensing unit) – either non-heated or heated hose assemblies available in lengths of 50'.

3. **Dispensing Method** (for applying Flexible DASH Adhesive) - a low or high-pressure dispensing gun for the application of two- component polyurethane foams.

4. **Air Compressor** – If applicable for dispensing equipment, consult equipment vendor for individual recommendations.

5. **Generator** – If applicable, consult equipment vendor for individual recommendations.

Conventional two-component pumping systems manufactured by Graco, 4C's Spray Equipment, Amped Equipment and ARI are readily available new and used. Contact the respective manufacturer for additional information.

B. Equipment Settings by Application Method

1. **Full Spray Application Equipment Settings**

   a. Flexible DASH Adhesive is to be dispensed at a minimum dynamic pressure of 900 psi.
   b. Dispensing gun should be a Fusion Air Purge gun by Graco, or equivalent, with a splatter tip.

2. **Bead Application Equipment Settings**

   a. Follow manufacturer's instructions for setting up spray rig for dispensing beads.

3. **Splatter Application Equipment Settings**

VERSICO
ROOFING SYSTEMS

a. Flexible DASH Adhesive should be dispensed in large droplets, not a fine mist. Air pressure/flow is too high if the Flexible DASH adhesive is dispensing in a fine mist.

b. Patriot Spray Rig Settings

1) Follow equipment vendor setup for the first-time use.
2) Ensure Patriot has an air compressor and VEE-AIR Manifold installed.
3) Air compressor: 80 psi.
4) Patriot Setting: 6
5) VEE-AIR gun: Air Valve to 0.5, Fluid 100% open
6) Recommended Air Setting for material temperatures of 70-80°F. When material is warmer, air pressure may need to be reduced to ensure proper flow.

c. HULK Spray Rig Settings

1) Follow equipment vendor setup for the first-time use.
2) Machine pressure: 60 psi.
3) Gun Pressure: 80 psi.
4) HULK gun: Air Valve to 100% open, Fluid 100% open.
5) Recommended Air Setting for material temperatures of 70-80°F. When material is warmer, air pressure may need to be reduced to ensure proper flow.

d. Dual Tank Settings

1) Follow setup on Flexible DASH Dual Tank Product Data Sheet.
2) The 14" extension nozzle should not be used for splatter application.

C. Installation Considerations

1. **Bead Adhesive Spacing –** Beads must be applied following spacing approved for specific project conditions (i.e. height, wind zone, and warranty wind speed coverage).

a. While 12-inch on-center bead spacing is commonly used in the field of the roof, projects with higher wind speed coverage most likely require narrower spacing between beads.

b. Perimeter bead spacing is typically at 6-inches on-center except for those projects with higher wind speed coverage where narrower bead spacing of 4-inches on-center may be required.

c. Refer to **Detail A-27.7** in **Spec Supplement G-08-20 "Insulation Attachment and Details"** and **Detail VF-27** in VersiFleece Specification for Membrane Attachment using Bead Adhesive or contact Versico prior to installation.

d. Substrate irregularity, which is commonly associated with gravel surfaced built-up roofing, must be compensated to ensure insulation boards are fully embedded. Do not apply thin beads of adhesive (less than 1/2 inch wide, wet bead for Non-Dual Tank Applications and 1.5" wide, wet bead for Dual Tank Applications), and if necessary increase width of the adhesive bead in uneven areas.

2. **Residual Asphalt**

a. **Incompatibility of the Substrate (Residual Un-Weathered Asphalt) –** While urethane adhesive is compatible with existing asphaltic roofs that have been exposed and weathered, it is difficult to adhere to **slick, smooth and un-weathered asphalt**. This condition may be encountered when an existing roof is removed, exposing an asphaltic vapor barrier or leaving asphalt residue.

b. To ensure proper adhesive attachment, one of the following options may be followed:

1) Prime the surface with Versico's CAV-GRIP 3V, CCW-702, CCW-702LV or CCW-702WB Primer for splatter and bead application.

2) Switch to full spray of Flexible DASH Adhesive applied from heated spraying rig to increase surface contact. 100% full coverage is required. Splatter applications are not accepted.

3) Install Versico's VapAir Seal 725TR Air & Vapor Barrier with CAV-GRIP 3V, CCW-702, CCW-702LV or CCW-702WB Primer over the existing asphalt.

4) Use mechanical securement to attach the first layer of insulation in lieu of adhesive.

3. **Air Infiltration**

a. On structural concrete decks, gaps between the structural deck and walls and those around penetrations, allows hot humid air from within the building to infiltrate the roofing assembly and possibly condense during cold season. Lower membrane temperature, especially those associated with white membranes, increase the probability of condensation and promote freezing during low temperatures. Collected frozen moisture trapped above the structural deck when thawed, will eventually lead to weakening of the bottom insulation facer. Weakening of the bottom of the insulation facer subsequently separation of the foam during wind event.

It is important to seal gaps around the perimeter and around penetrations, refer to **Spec Supplement G-01-21 "Construction Generated Moisture"**, to eliminate moisture infiltration.

b. The same phenomenon with migrating moisture could occur on steel decks, where gaps are not sealed or vapor retarders are not used. In such a case, condensed moisture could result in insulation gapping, rusting of metal fasteners or steel decks and cause insulation to become wet. Refer to **Spec Supplement G-01-21 "Construction Generated Moisture".**

Copyright 2024 Versico

Versico, VersiGard, VersiFleece, Flexible DASH Adhesive are Trademarks of Versico

This Spec Supplement represents the applicable information available at the time of its publication. Owners, Specifiers and Versico authorized roofing applicators should consult Versico or their Versico Independent Sales Representative for any information that has subsequently been made available.

Review the appropriate Versico Warranty for specific warranty coverage, terms, conditions and limitations.

SPECIFICATION SUPPLEMENT

G-16-22

Plaza Paver Systems

Adhered, Mechanically Fastened or Induction Welding Attachment Method

January 2024

The information contained in this supplement serves as criteria for Specifiers and Authorized Contractors regarding the design and installation of Versico Roofing Systems and related products. Additional information essential for the design and installation of the Roof Systems mentioned herein are also included in the respective Specification for each Roof System and in the Design Reference Section of the Versico Technical Manual. Specifiers and Authorized Contractors are advised to reference all applicable sections.

A. Description

The roofing assembly incorporates Versico supplied Concrete, Porcelain or Rubber Pavers in conjunction with a Versico Roofing membrane (EPDM, TPO, PVC, KEE HP) system installed in accordance with the appropriate Versico Roof Membrane Specification.

1. **Membrane Roof Systems**

   The concrete and porcelain pavers are installed over a slip sheet of HP Protective Mat or 300 HV Protection Fabric in conjunction with an approved Paver Pedestal System over the roof membrane (EPDM, TPO, PVC or KEE HP). The Rubber Pavers are installed directly over the roof membrane (EPDM) or over a slip sheet of 300HV Protection Fabric (TPO, PVC or KEE HP).

   a. **Adhered Assemblies** – Using EPDM, TPO, PVC or KEE HP, insulation may be installed either mechanically (fastened directly to the deck) or set in Flexible DASH bead adhesive to the structural deck. Subsequent layers of insulation or coverboard may be mechanically fastened through all layers or set in Flexible DASH bead adhesive. The membrane shall be fully adhered using the appropriate bonding adhesive following Versico's Thermoset (EPDM), Thermoplastic (TPO, PVC, and KEE HP), VersiFleece (EPDM, TPO, PVC or KEE HP) or VersiFleece AFX (EPDM or TPO) membrane Specifications.

   b. **Induction Welded Assemblies** – Using TPO or PVC, insulation is mechanically fastened using appropriate Versico Fasteners and TPO or PVC Induction Welding Plates which are used to secure both layers to the structural deck. The fastening density of the plates and fasteners shall be in compliance with the Induction Welding Attachment (Attachment I) of the Thermoplastic Specification.

   c. **Mechanically Fastened Assemblies** – Using EPDM, TPO, PVC or KEE HP, membranes are mechanically fastened over insulation/underlayment to the deck with the appropriate Versico Fasteners and Fastening Plates. The fastening density of the plates and fasteners shall be in installed per Versico's Thermoset (EPDM), Thermoplastic (TPO, PVC, and KEE HP) membrane Specification.

2. **Inverted Roof Membrane Assembly (IRMA) Systems**

   A layer of drainage board/mat is loose-laid over the membrane. Layers of insulation are also loose-laid directly on the drainage board/mat. The concrete and porcelain pavers are installed over a slip sheet of HP Protective Mat or 300HV Protection Fabric in conjunction with an approved Paver Pedestal System over the insulation. The rubber pavers are installed over a slip sheet of HP Protective Mat over the insulation. NOTE: Porcelain and Rubber Pavers are lightweight, weighing 9 lb/sf and 6 lb/sf respectively. Check current building code requirements for building height, parapet height and project location to ensure that these overburden options are suitable in IRMA Assemblies.

   a. **Adhered Assemblies** – Using EPDM, TPO, PVC or KEE HP, the membrane is applied to the structural deck with an appropriate bonding adhesive.

   b. **Induction Welded Assemblies** – Using TPO or PVC, insulation is mechanically fastened using appropriate Versico Fasteners and TPO or PVC Induction Welding Plates are used to secure both layers to the structural deck. The

VERSICO ROOFING SYSTEMS

fastening density of the plates and fasteners shall be in compliance with the Induction Welding Attachment (Attachment I) of the Thermoplastic Specification.

c. **Mechanically Fastened Assemblies** – Using EPDM, TPO, PVC or KEE HP, the membrane is installed mechanically fastened directly to the structural deck.

Any of the assemblies described herein, using a minimum 60-mil membrane, are eligible for a 5, 10, 15, or 20 Year Membrane System Warranty with a Warranty wind speed up to 72 mph. For higher wind speed coverage, project may be submitted to Versico for Approval. An Overburden Removal and Replacement Warranty is available with all Versico supplied Plaza Paver Systems (Concrete, Porcelain and Rubber) with 10, 15, or 20 Year Durations for an additional fee.

B. Quality Assurance

1. The specified roofing system must be installed by a Versico Authorized Roofing Contractor in compliance with drawings and specifications as approved by Versico.

2. Roof system must be inspected and approved by a Technical Representative of Versico prior to Plaza Paver System installation.

3. Do not install this assembly before the concrete deck has reached its' initial structural strength. Project Engineer must be consulted prior to job start-up.

C. Submittals

1. Shop drawings must be submitted to Versico by the Versico Authorized Roofing Contractor along with a completely executed Copy-A Job Approval Request for approval. Approved shop drawings are required for inspection of the roof and on projects where on-site technical assistance is requested.

2. Upon completion of the installed work, submit copies of the manufacturer's final inspection to the specifier prior to the issuance of the manufacturer's warranty.

D. Products

In addition to the products listed below, products listed in "Part II" of the Versico Thermoset/Thermoplastic Roofing System Specification can be used as part of the Plaza Paver System.

1. **Hanover® Pavers**

   a. **Prest Pavers:** Hanover Roof and Plaza Pavers provide durability, protection and performance for the roof system from harsh weather conditions. A textured Tudor® finish provides slip resistant properties making Hanover Pavers safer than gravel ballast for pedestrians. By elevating the pavers, water is channeled away from the surface. Roof Pavers allow easy access to the roof and waterproofing system for repairs or standard maintenance procedures. Available in Tudor Finish, 8 standard colors (custom available), in a standard size of 23.5" x 23.5" x 2" (other sizes available upon request) and weighs 25 lb/sf. The use of Hanover Pavers requires the use of one of the pedestals below to maintain material warranty.

      1. **High Tab Pedestals** – are 5/8" high and are stackable to increase the height.

      2. **EPDM Pedestal and Leveling Shims** – are 3/8" fixed height but are not stackable.

      3. **Elevator Pedestal** – consisting of a base and top plate which can be combined with various size couplers to increase height.

   b. **Pedestal Pavers:** For use as an alternative to standard concrete pavers and polyethylene or EPDM pedestal systems, Hanover Pedestal Pavers are produced with integrated concrete feet providing a 1/2" elevation clearance for water drainage. Available in Tudor Finish (for aesthetics) or Diamond (for walkways), 8 standard colors (custom available), in a standard size of 23.5" x 23.5" x 2.25" and weighs 22 lb/sf. As the paver is produced with integral, pedestal feet, additional pedestal systems are not recommended or required. The use of 300HV Protection Fabric is required with this paver.

   c. **Guardian Pavers:** The Hanover Guardian® Paver System is specially designed to create a monolithic paver surface which provides high wind uplift resistance. Guardian is made up of a unique 3-piece Guardian Pedestal and a specially shaped Guardian Paver that, together, "lock down" and unitize the entire roof paver surface, preventing horizontal and vertical movement. The Guardian Pedestal has a square top that allows its bolt to pass through to a base beneath, fitting into a recessed grooved portion of the Guardian Paver. Available in multiple finishes, 10 standard colors (custom available), in standard sizes of 17.625" x 35.375" x 2" or 3", 23.5" x 23.5" x 2" or 3", 23.5" x

35.375” x 2” or 3”, OR 29.75” x 29.75” x 2” and weighs 25 lb/sf for 2” thicknesses and 38 lb/sf for 3” thicknesses. Guardian pavers must be used with specialized pedestals consisting of a standard elevator pedestal base combined with a patented locking top cap (available in 8 colors). The system achieved -81.1 psf uplift resistance according to Florida’s TAS (Testing Application Standard) 108 test.

d. **Porcelain Pavers:** Hanover® Porcelain Pavers are a premium alternative to concrete pavers. They are hard-wearing, anti-slip, weather resistant and capable of withstanding heavy loads without comprising aesthetics. Porcelain Pavers are resistant to acid, chemicals, mold and salt. They will not stain and do not require sealing. Porcelain Pavers are installed over standard Hanover elevator pedestal bases combined with Hanover’s low-tab pedestal tops specially designed for the porcelain pavers, providing an 1/8” joint for water drainage. Porcelain Pavers only weigh approximately 9 pounds per square foot and do not satisfy typical ballast uplift requirements. To increase wind uplift performance, combine with Hanover's ballasted GridLoc structural support system. Available in multiple finishes, 17 colors/designs, in standard sizes of 12” x 48” x 2” or 3/4”, 16” x 32” x 3/4”, 16” x 48” x 3/4”, 24” x 24” x 3/4” OR 24” x 48” x 3/4” and weighs approximately 9 lb/sf.

2. **Sunny Brook Pavers**

a. **Pressed Concrete Pavers:** Sunny Brook pressed concrete pavers are available in a wide variety of sizes, colors, patterns and textures to accent any building, decor and landscaping. The standard Quarry Stone texture combines aesthetic appeal of decorative aggregates with the strength of concrete to create pavers that are strong, durable and beautiful. Available in Quarry Stone Texture (standard, with 5 additional finishes available), 21 standard colors, in a standard size of 23.5” x 23.5” x 2” (additional sizes available upon request) and weighs 24 lb/sf. Sunny Brook Pavers use MRP Support pedestals as supplied by Versico.

3. **Westile Pavers**

a. **Western Plaza Pavers:** Westile Western Plaza Pavers are made of a high-density concrete and are well-suited for use in plaza decks, providing a durable, elegant surface while protecting the roof membrane and increasing amenity space. Westile Western Plaza Pavers are to be used in conjunction with high-density polypropylene pedestals that facilitate proper spacing and drainage and provide the ability to create a dead level surface. Available exclusively for projects in the western United States and Canada including the following states and provinces: Alaska, Arizona, California, Colorado, Hawaii, Idaho, Montana, Nevada, New Mexico, Oregon, Utah, Washington, Wyoming, British Columbia, Alberta, Saskatchewan. Available in Shot Blast Texture (standard, with matte finish available as a special order), 7 standard colors, in a standard size of 24” x 24” x 1.8125” (additional sizes available upon request) and weighs 23 lb/sf. Westile Western Plaza Pavers use Bison or MRP Support pedestals as supplied by Versico.

4. **Versico Rubber Pavers**

a. **Plus Series Rubber Pavers:** Made of recycled rubber, the Plus Series pavers are an economical solution intended for use in low traffic areas as well as walkways to rooftop mechanical units. Available in 6 standard colors, in a standard size of 24” x 24” x 2” and weighs 6 lb/sf. Special adhesive must be applied to all paver-to-paver joints using a special adhesive application tip, once all pavers are in place. Adhesive helps keep pavers from separating during expansion and contraction due to temperature fluctuations. Pavers are installed directly over EPDM roofing membranes or over 300HV Protection Fabric for TPO, PVC and KEE HP roofing membranes.

b. **Premium Rubber Pavers:** Premium Series Rubber Pavers feature a top wearing surface of SBR recycled rubber as well as varying percentages of EPDM virgin rubber for superior durability, as well as, wear and fade resistance. This makes the Premium Series pavers ideal for high traffic and plaza areas, and a great alternative to concrete paver systems. The Premium Series also features a broader range of color options that can aide in artistic rooftop design. Available in 10 standard colors, in a standard size of 24” x 24” x 2” and weighs 6 lb/sf. Special adhesive must be applied to all paver-to-paver joints using a special adhesive application tip, once all pavers are in place. Adhesive helps keep pavers from separating during expansion and contraction due to temperature fluctuations. Pavers are installed directly over EPDM roofing membranes or over 300HV Protection Fabric for TPO, PVC and KEE HP roofing membranes.

5. **HP Protection Mat:** a nominal 6 oz. per square yard, UV-resistant, polypropylene, needle-punched fabric. HP Protective Mat is installed as a slip sheet for some paver applications.

6. **300HV Protection Fabric:** a (16 oz/ sq yd) extremely tough non-woven polypropylene fabric designed for use as a protection course over Versico’s roofing membranes providing cushion for heavy overburden materials. 300HV Protection Fabric is non-biodegradable and stabilized to resist soil, chemicals and mildew, as well as acids and alkalis.

E. Execution

Follow current specifications for installing roof membranes and seaming per specific membrane. [VersiGard (EPDM), VersiWeld (TPO) or VersiFlex (PVC/KEE HP)].

General

Exercise care in placing pavers and pedestals over roofing or waterproofing so protection materials are not displaced and roofing or waterproofing is not punctured or otherwise damaged. Carefully replace protection materials that become displaced and arrange for repair of damaged roofing or waterproofing before covering with paver system.

F. Installation

1. Proceed with installing roofing system as described in this section and in accordance with Versico published Specifications for the specific membrane type.

2. After installation of the roofing membrane, install slip sheet of HP Mat or 300HV Protective Fabric, as required by paver system, as outlined above.

3. Install appropriate paver pedestal as outlined by the plaza paver system selected.

4. Install Plaza Paver according to manufacturer's written instructions.

G. Associated Installation Details

Concrete Pavers on Pedestals ..... PD-A
Concrete Pavers on Low-Rise or Fixed Height Pedestals ..... PD-B
Concrete Pedestal Pavers ..... PD-C
IRMA Concrete Paver Assembly – Option 1 ..... PD-D
IRMA Concrete Paver Assembly – Option 2 ..... PD-E
Drain Detail – Low-Rise or Fixed Height Paver Assemblies PD-6.1
Drain Detail –Adjustable Height Paver Pedestal Assembly PD-6.2
Vertical Termination PD-12.1
Vertical Termination – High-Wind Option PD-12.2
Horizontal Termination – Aesthetic Option PD-12.3
Horizontal Termination – High-Wind Option PD-12.4
Rubber Interlocking Pavers ..... PD-RA
Rubber Paver Joint Adhesive Application PD-R4.1
Drain Detail - Rubber Paver PD-R6.1
Horizontal Termination – Aesthetic Option PD-R12.3
Horizontal Termination – High-Wind Option PD-R12.4

End of Section

Copyright 2024 Versico
Versico, ChannelDry, VersiGard, VersiWeld and VersiFlex are Trademarks of Versico

Hanover, Tudor Hanover Pedestal and Guardian are Trademarks of Hanover Architectural Products

This specification represents the applicable information available at the time of its publication. Owners, specifiers and Versico Authorized Roofing contractors should consult Versico or their Versico Independent Sales Representative for any information, which has subsequently been made available.
Review the appropriate Versico warranty for specific warranty coverage, terms, conditions and limitations.

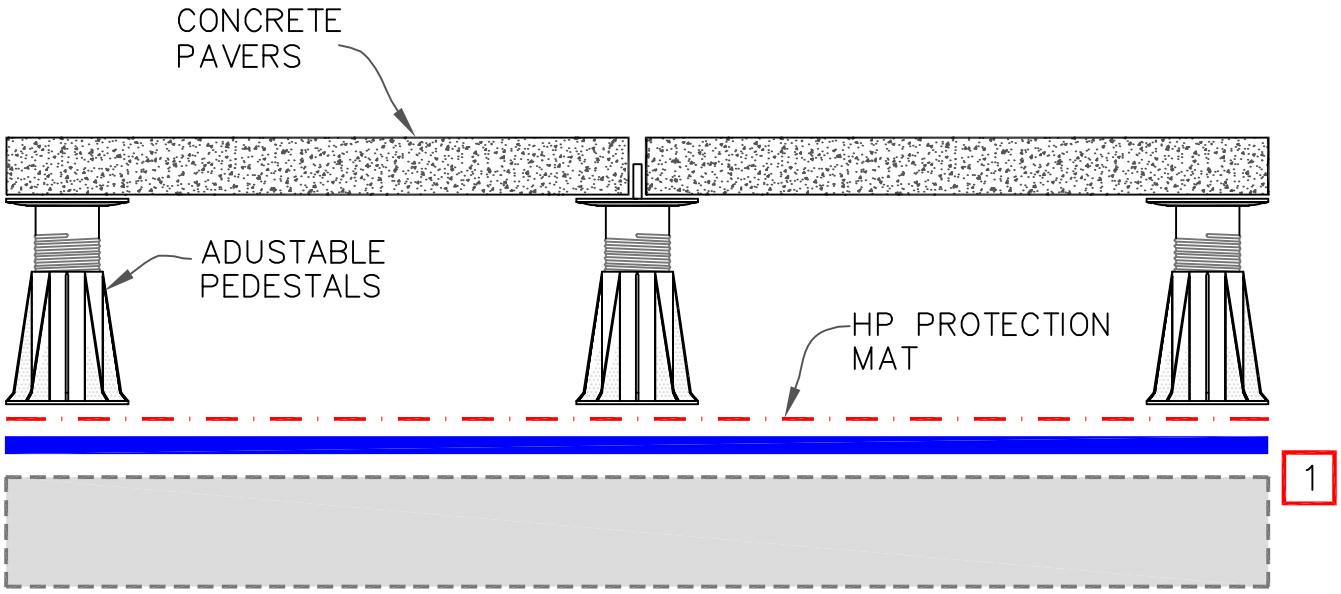

NOTES:

1. APPROVED ROOF ASSEMBLY. REFER TO SPECIFICATIONS

VERSICO
ROOFING SYSTEMS
© 2023 VERSICO

- EPDM/TPO/PVC
- CONCRETE
- 0 SEE NOTE(S)
- HP PROTECTIVE MAT
- 300HV PROTECTION FABRIC

CONCRETE PAVERS ON PEDESTALS

2022 PAVER DETAILS

DETAIL NO.

PD1 A

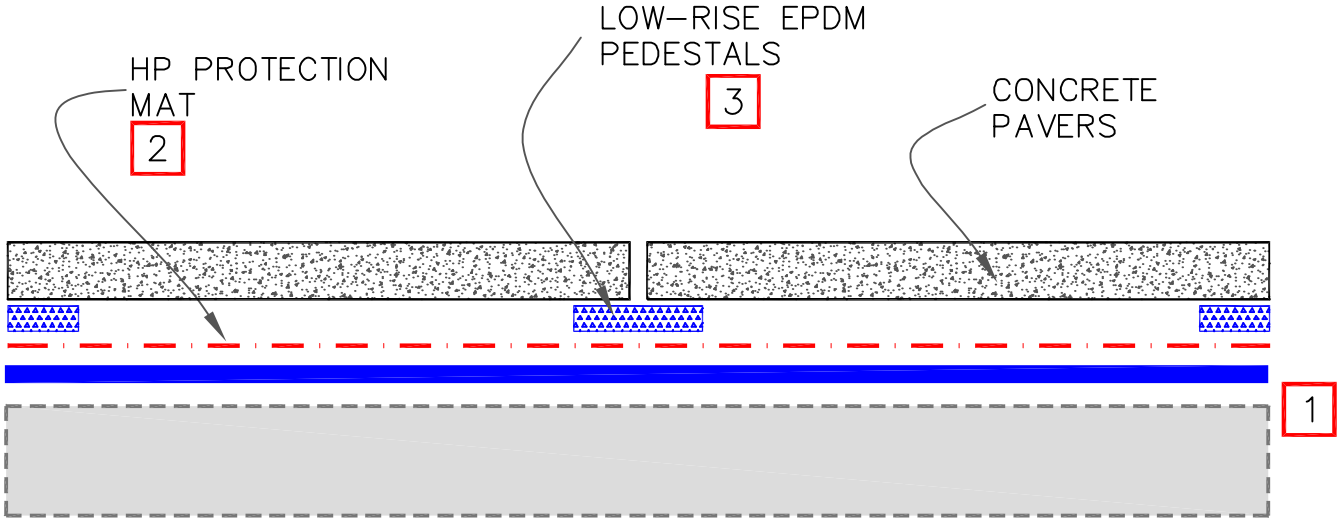

NOTES:

1. APPROVED ROOF ASSEMBLY. REFER TO SPECIFICATIONS
2. HP MAT IS NOT REQUIRED WHEN USING EPDM PEDESTALS OVER EPDM OR TPO MEMBRANES
3. AS AN ALTERNATIVE TO LOW-RISE EPDM PEDESTALS, FIXED-HEIGHT PLASTIC PEDESTALS, LEVELING SHIMS AND SLOPE COMPENSATORS CAN ALSO BE USED

VERSICO ROOFING SYSTEMS
© 2023 VERSICO

- EPDM/TPO/PVC
- CONCRETE
- 0 SEE NOTE(S)
- HP PROTECTIVE MAT
- 300HV PROTECTION FABRIC

CONCRETE PAVERS ON LOW-RISE OR FIXED HEIGHT PEDESTALS

2022 PAVER DETAILS

DETAIL NO. PD1 B

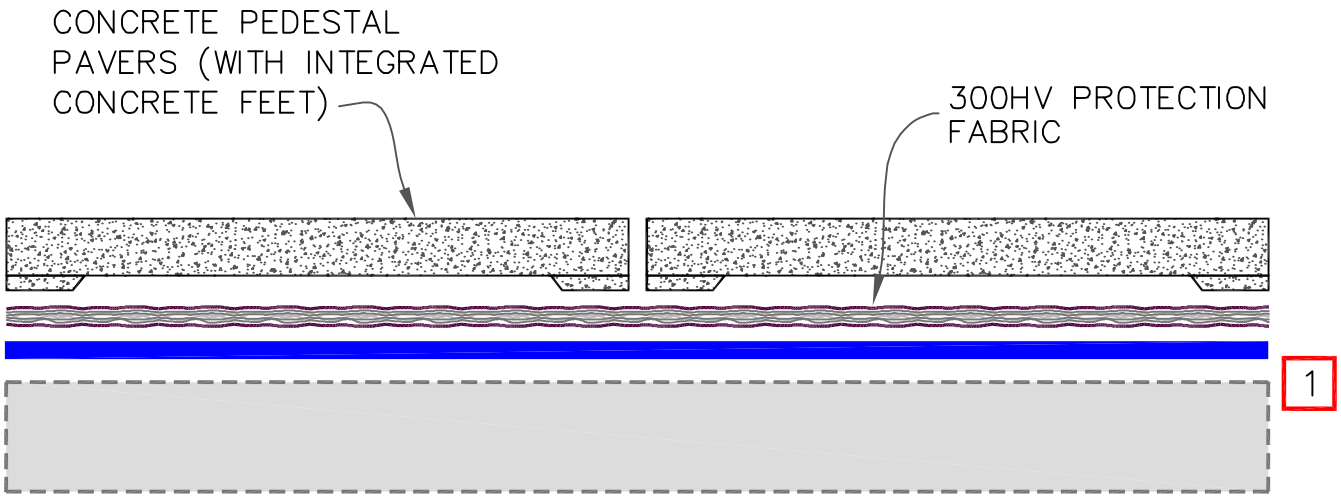

NOTE:

1. APPROVED ROOF ASSEMBLY. REFER TO SPECIFICATIONS

VERSICO ROOFING SYSTEMS
© 2023 VERSICO

- EPDM/TPO/PVC
- CONCRETE
- 0 SEE NOTE(S)
- HP PROTECTIVE MAT
- 300HV PROTECTION FABRIC

CONCRETE PEDESTAL PAVERS

2022 PAVER DETAILS

DETAIL NO. PD1 C

POLYSTYRENE INSULATION	
COMPRESSIVE STRENGTH	DENSITY
25 POUNDS/INCH^2	2 POUNDS/FOOT^3
17,577 KILOGRAM/METER^2	32.1 KILOGRAM/METER^3

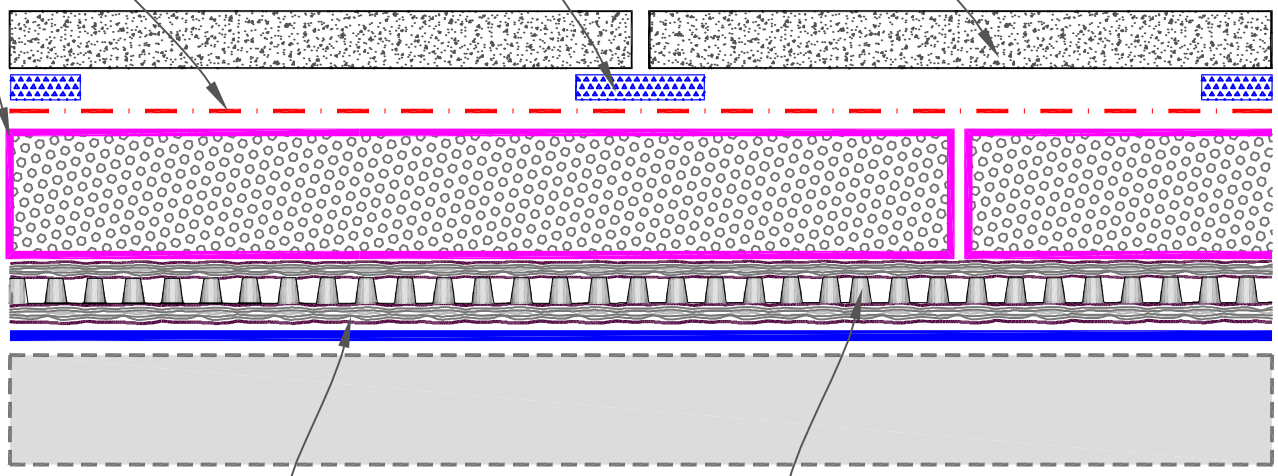

NOTES:

1. APPROVED ROOF ASSEMBLY. REFER TO SPECIFICATIONS.
2. ADJUSTABLE SCREW-JACK PEDESTALS OR PEDESTAL PAVERS MAY ALSO BE USED.

VERSICO ROOFING SYSTEMS
© 2023 VERSICO

- EPDM/TPO/PVC
- CONCRETE
- 0 SEE NOTE(S)
- HP PROTECTIVE MAT
- 300HV PROTECTION FABRIC

IRMA CONCRETE PAVER ASSEMBLY – OPTION 1

2022 PAVER DETAILS

DETAIL NO. PD1 D

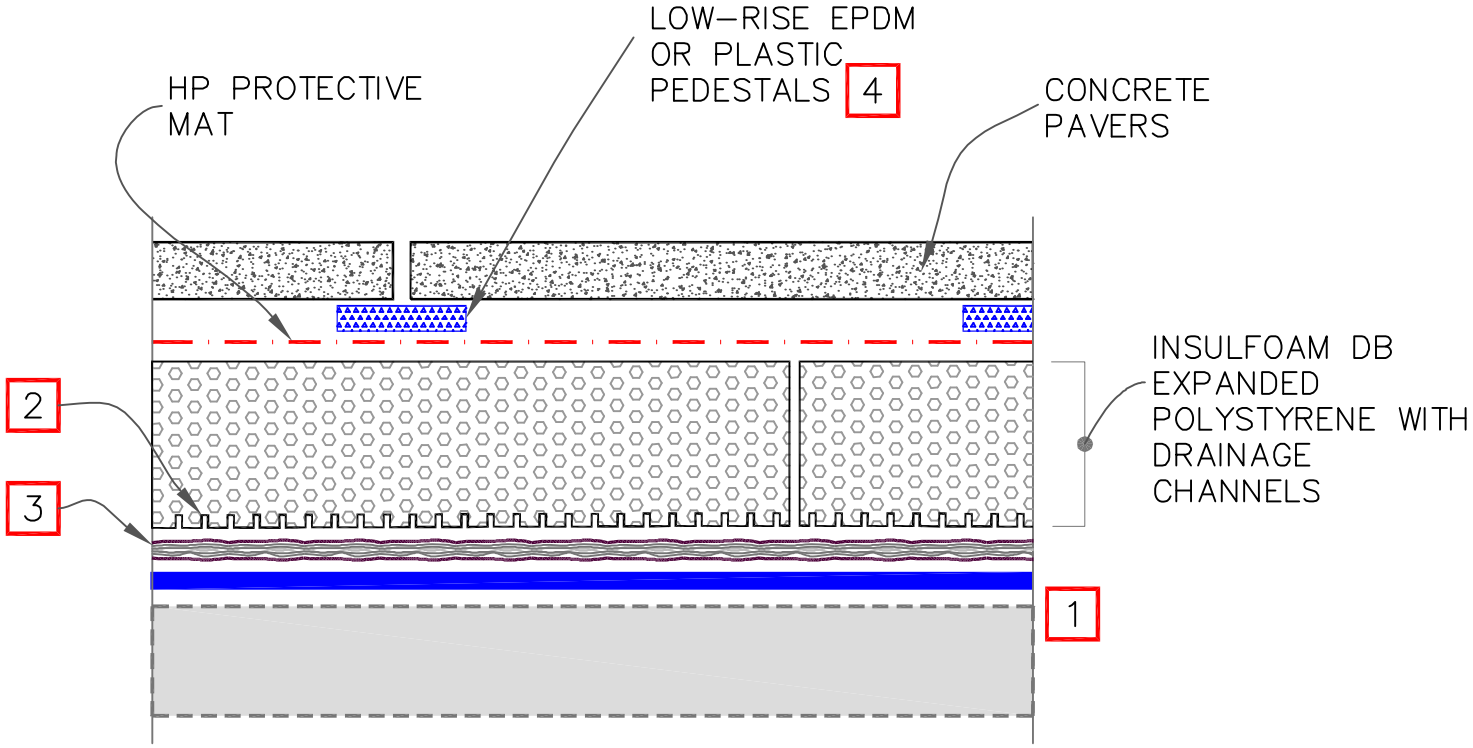

NOTES:

1. APPROVED ROOF ASSEMBLY. REFER TO SPECIFICATIONS.
2. DRAINAGE CHANNELS TO BE ORIENTED IN THE DIRECTION OF ROOF DRAINS
3. IF POLYSTYRENE INSULATION IS USED IN CONJUNCTION WITH PVC MEMBRANE, 300HV PROTECTION FABRIC IS NEEDED BETWEEN EPS AND PVC.
4. ADJUSTABLE SCREW–JACK PEDESTALS OR PEDESTAL PAVERS MAY ALSO BE USED.

VERSICO ROOFING SYSTEMS
© 2023 VERSICO

- EPDM/TPO/PVC
- CONCRETE
- 0 SEE NOTE(S)
- HP PROTECTIVE MAT
- 300HV PROTECTION FABRIC

IRMA CONCRETE PAVER ASSEMBLY – OPTION 2

2022 PAVER DETAILS

DETAIL NO. PD1 E

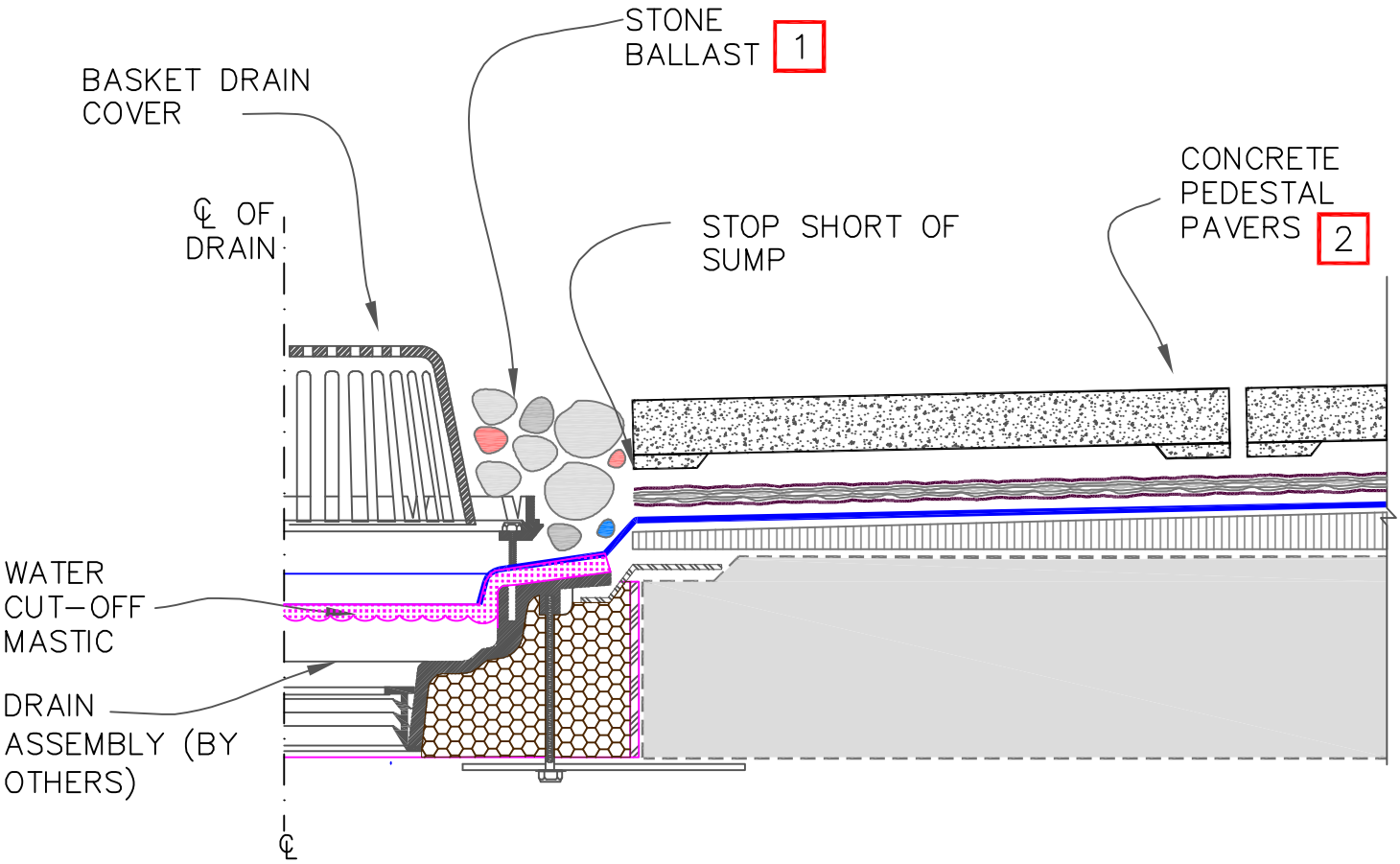

NOTES:

1. STONE BALLAST IS OPTIONAL TO PROVIDE AESTHETICS.
2. AS AN ALTERNATE TO CONCRETE PEDESTAL PAVERS, STANDARD CONCRETE PAVERS ON FIXED HEIGHT PEDESTALS CAN ALSO BE USED. REFER TO DETAIL PD B FOR ASSEMBLY INFORMATION.

VERSICO ROOFING SYSTEMS
© 2023 VERSICO

- EPDM/TPO/PVC
- CONCRETE
- 0 SEE NOTE(S)
- HP PROTECTIVE MAT
- 300HV PROTECTION FABRIC

DRAIN DETAIL – LOW-RISE, FIXED HEIGHT PEDESTAL OR PEDESTAL PAVER ASSEMBLIES

2022 PAVER DETAILS

DETAIL NO. PD| 6.1

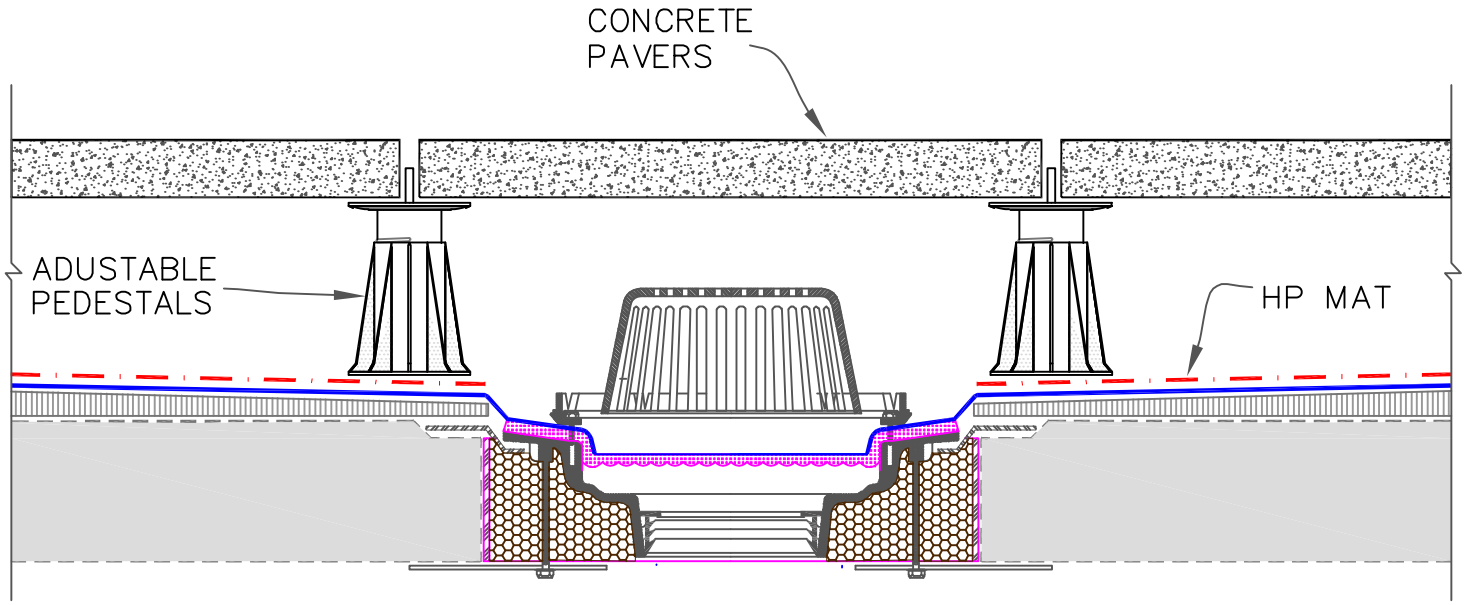

NOTE:

1. THIS OPTION IS ONLY APPLICABLE TO PAVERS ON ADJUSTABLE PEDESTALS WHEN THERE IS ENOUGH HEIGHT ADJUSTMENT TO CLEAR DRAIN BASKETS

VERSICO ROOFING SYSTEMS
© 2023 VERSICO

- EPDM/TPO/PVC
- CONCRETE
- 0 SEE NOTE(S)
- HP PROTECTIVE MAT
- 300HV PROTECTION FABRIC

DRAIN DETAIL – ADJUSTABLE HEIGHT PAVER PEDESTAL ASSEMBLY

2022 PAVER DETAILS

DETAIL NO. PD| 6.2

CAUTION
CONCRETE PAVERS MUST NOT BE USED AS WALKWAYS NEAR THE ROOF EDGES, PARAPET WALLS AND UNPROTECTED AREAS WITHOUT FALL PROTECTION.

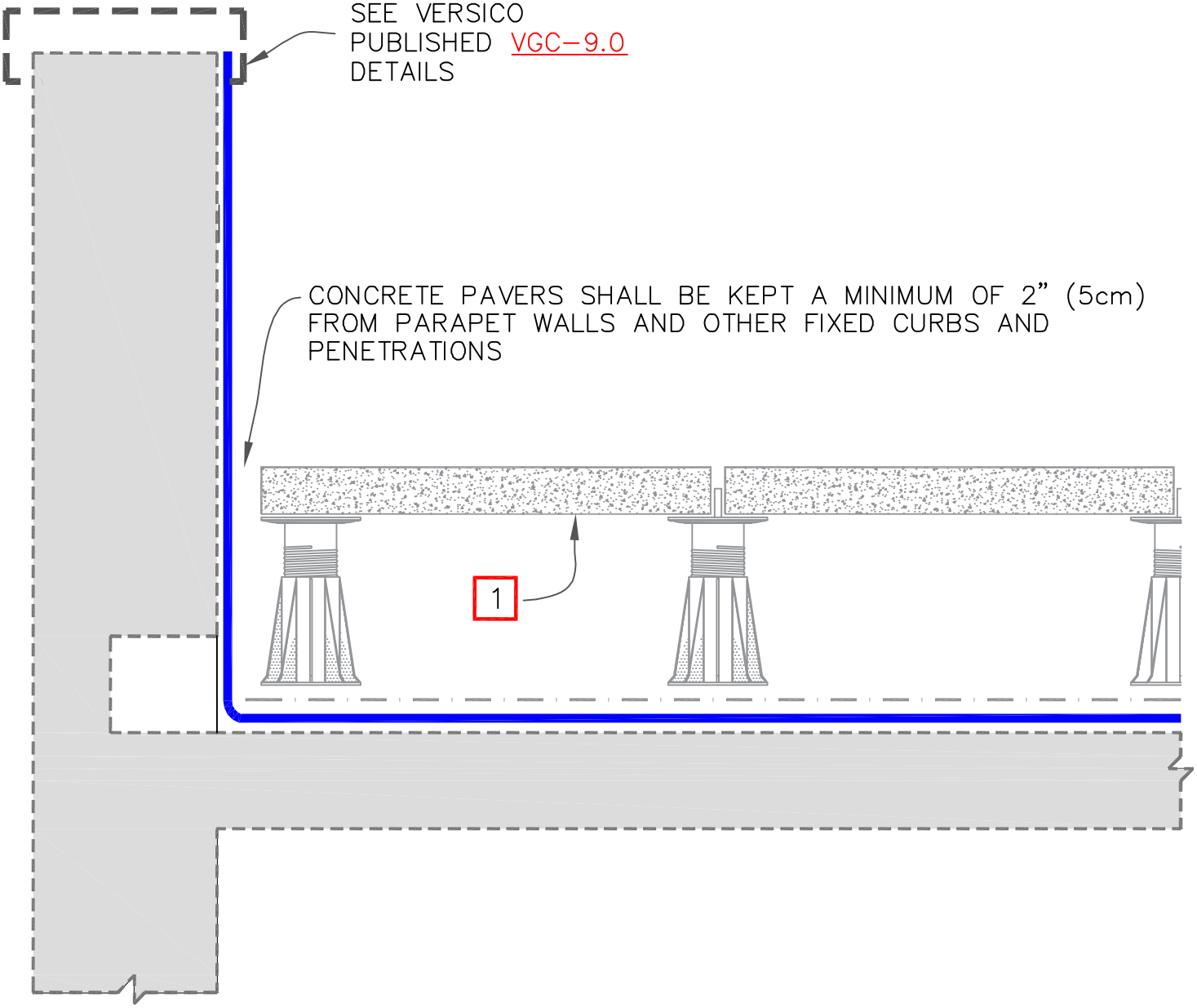

NOTE:
1. CONCRETE PAVERS ON ADJUSTABLE PEDESTALS SHOWN. REFER TO PD DETAIL B, C, D, AND E FOR ACCEPTABLE ALTERNATIVE ASSEMBLIES.

VERSICO ROOFING SYSTEMS
© 2023 VERSICO

- EPDM/TPO/PVC
- CONCRETE
- 0 SEE NOTE(S)
- HP PROTECTIVE MAT
- 300HV PROTECTION FABRIC

ALL ASSEMBLIES

VERTICAL TERMINATION

2022 PAVER DETAILS

DETAIL NO. PD| 12.1

CAUTION
CONCRETE PAVERS MUST NOT BE USED AS WALKWAYS NEAR THE ROOF EDGES, PARAPET WALLS AND UNPROTECTED AREAS WITHOUT FALL PROTECTION.

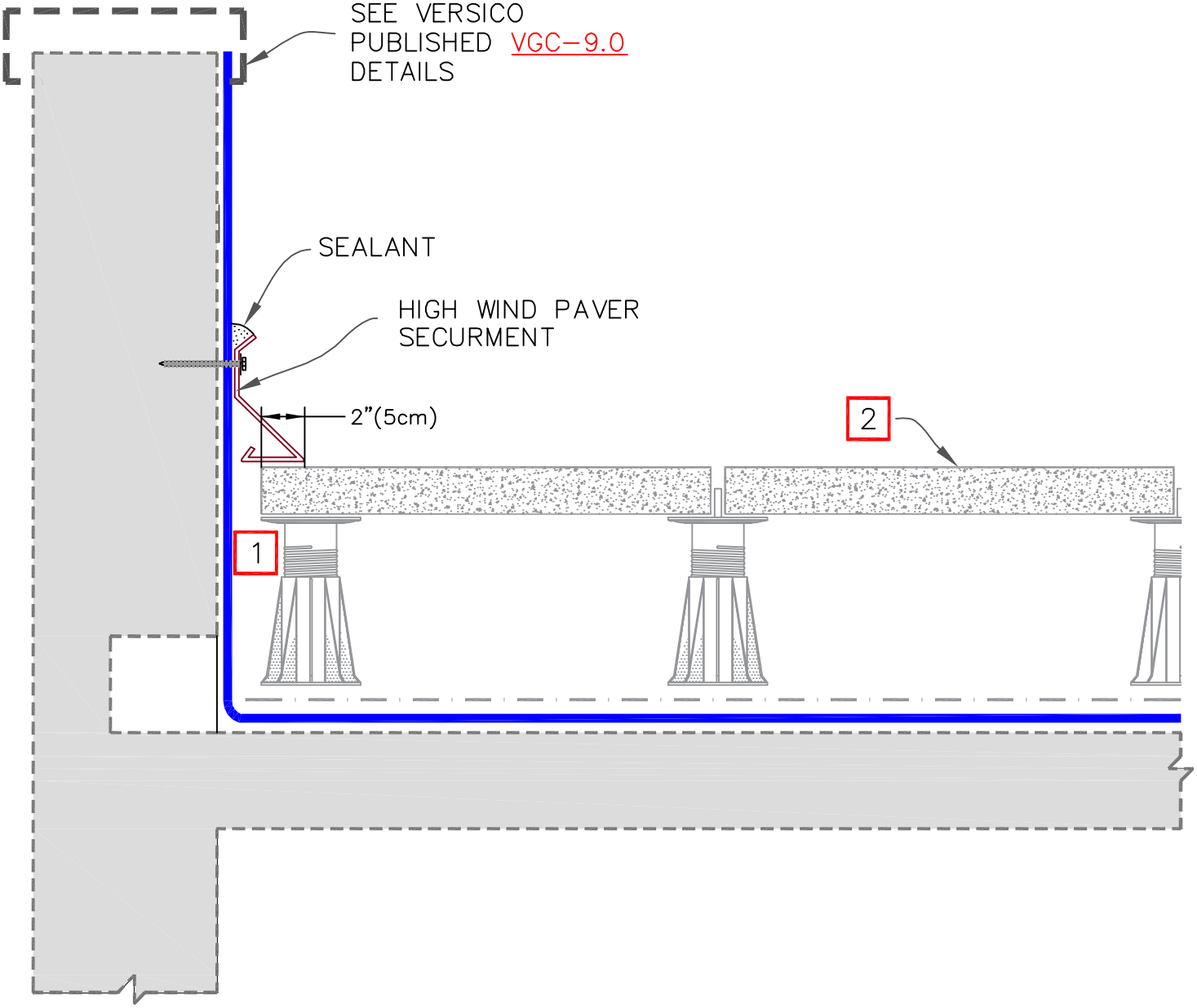

NOTES:

1. PAVERS SHALL BE KEPT A MINIMUM OF 2" (5cm) FROM PARAPET WALL.
2. CONCRETE PAVERS ON ADJUSTABLE PEDESTALS SHOWN. REFER TO PD DETAIL B, C, D, AND E FOR ACCEPTABLE ALTERNATIVE ASSEMBLIES.

VERSICO ROOFING SYSTEMS
© 2023 VERSICO

- EPDM/TPO/PVC
- CONCRETE
- 0 SEE NOTE(S)
- HP PROTECTIVE MAT
- 300HV PROTECTION FABRIC

ALL ASSEMBLIES

VERTICAL TERMINATION HIGH–WIND OPTION

2022 PAVER DETAILS

DETAIL NO. PD | 12.2

*CAUTION
CONCRETE PAVERS AS A WALKWAY MUST BE LOCATED MIN. 6'–0" (183cm) AWAY FROM THE NEAREST UNPROTECTED ROOF EDGES OR AS REQUIRED PER APPLICABLE LOCAL CODES/OSHA REQUIREMENTS.

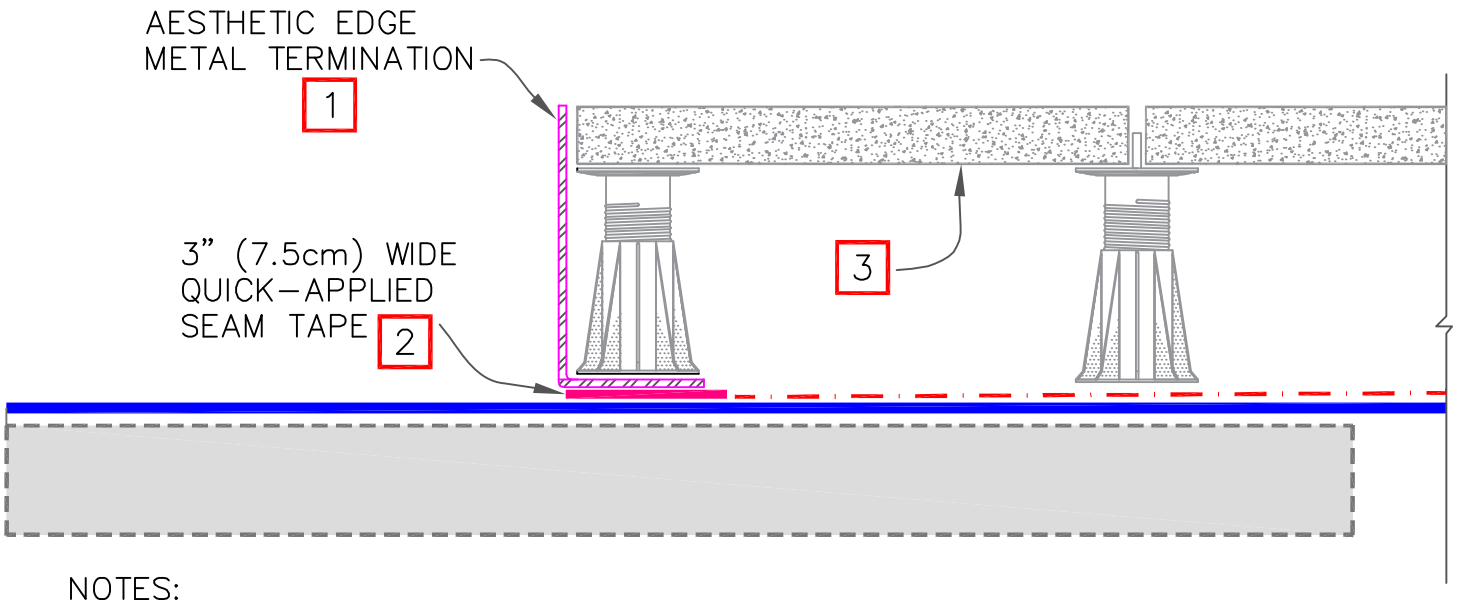

NOTES:

1. METAL EDGE TREATMENT IS USED FOR AESTHETICS AND NOT NEEDED FOR WARRANTY COMPLIANCE

2. QUICK–APPLIED SEAM TAPE SHALL EXTEND 1/4" (1cm) BEYOND EDGE OF METAL EDGE TO PROTECT ROOF MEMBRANE FROM METAL BURRS & CORNERS

3. CONCRETE PAVERS ON ADJUSTABLE PEDESTALS SHOWN. REFER TO PD DETAIL B, C, D, AND E FOR ACCEPTABLE ALTERNATIVE ASSEMBLIES.

VERSICO ROOFING SYSTEMS
© 2023 VERSICO

- EPDM/TPO/PVC
- CONCRETE
- 0 SEE NOTE(S)
- HP PROTECTIVE MAT
- 300HV PROTECTION FABRIC

ALL ASSEMBLIES

HORIZONTAL TERMINATION AESTHETIC OPTION

2022 PAVER DETAILS

DETAIL NO. PD | 12.3

*CAUTION
CONCRETE PAVERS AS A WALKWAY MUST BE LOCATED MIN. 6'–0" (183cm) AWAY FROM THE NEAREST UNPROTECTED ROOF EDGES OR AS REQUIRED PER APPLICABLE LOCAL CODES/OSHA REQUIREMENTS.

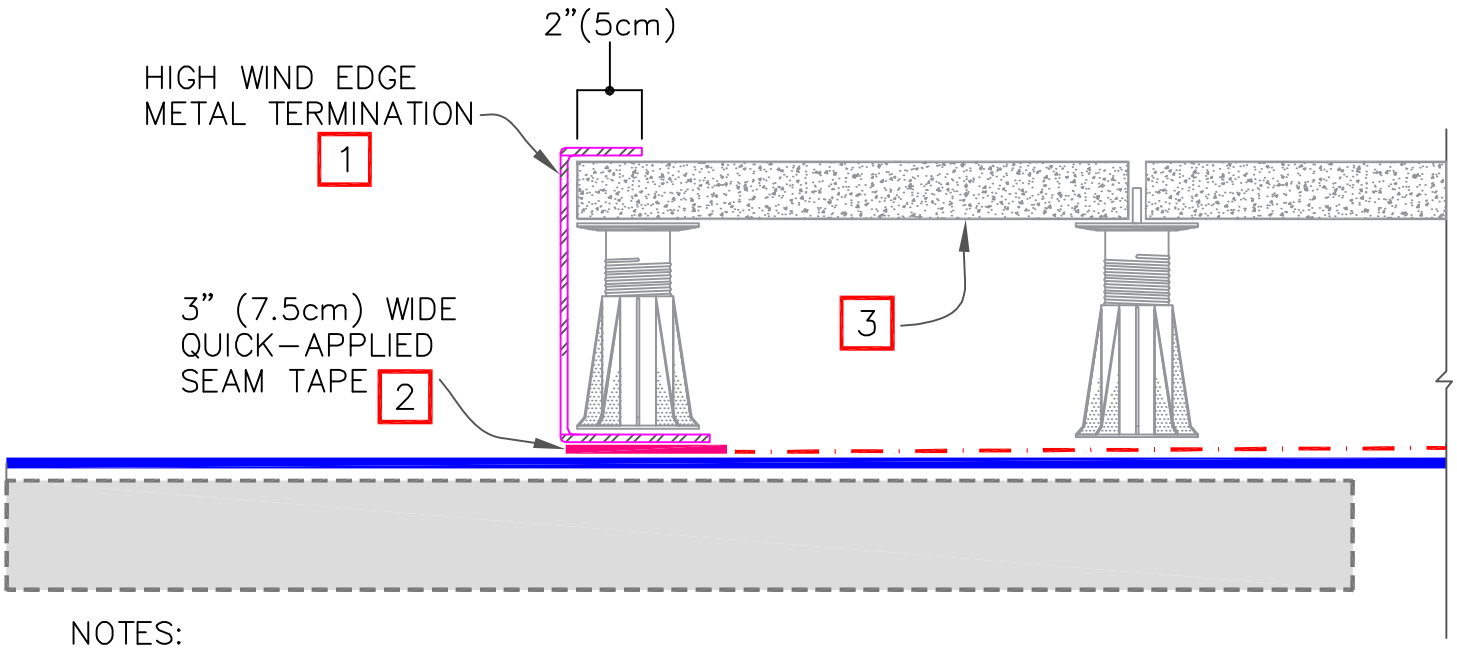

NOTES:

1. HIGH WIND METAL EDGE TREATMENT SHOULD BE USED IN HIGHER WIND APPLICATIONS TO HELP SECURE THE EXPOSED PERIMETER PAVERS. NOT REQUIRED FOR WARRANTY COMPLIANCE.

2. QUICK–APPLIED SEAM TAPE SHALL EXTEND 1/4" (1cm) BEYOND EDGE OF METAL EDGE TO PROTECT ROOF MEMBRANE FROM METAL BURRS & CORNERS

3. CONCRETE PAVERS ON ADJUSTABLE PEDESTALS SHOWN. REFER TO PD DETAIL B, C, D, AND E FOR ACCEPTABLE ALTERNATIVE ASSEMBLIES.

VERSICO ROOFING SYSTEMS
© 2023 VERSICO

- EPDM/TPO/PVC
- CONCRETE
- 0 SEE NOTE(S)
- HP PROTECTIVE MAT
- 300HV PROTECTION FABRIC

ALL ASSEMBLIES

HORIZONTAL TERMINATION HIGH–WIND OPTION

2022 PAVER DETAILS

DETAIL NO. PD | 12.4

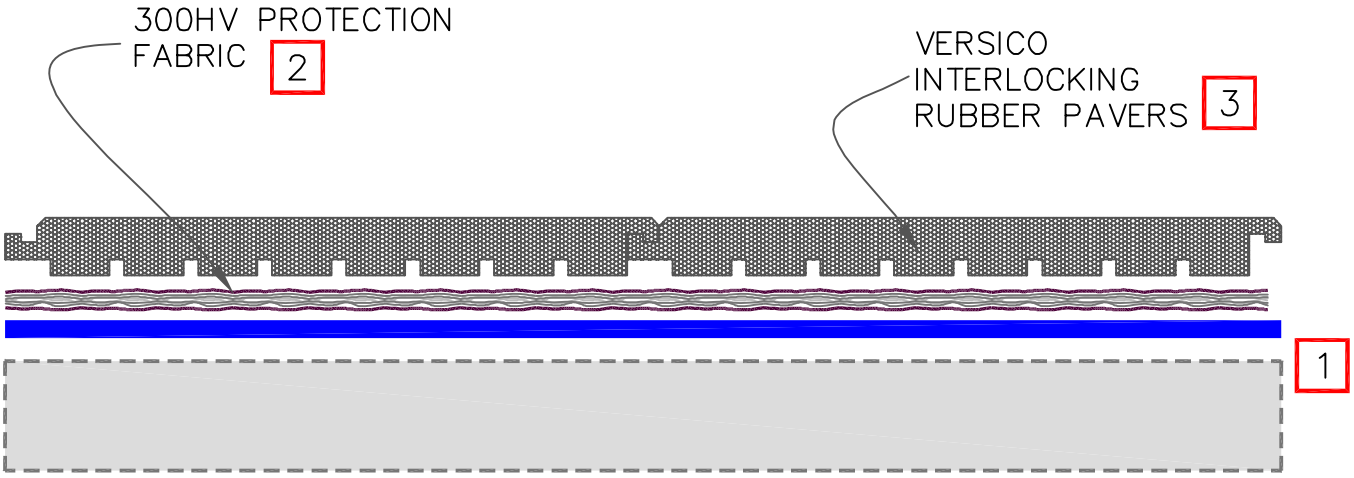

NOTES:

1. APPROVED ROOF ASSEMBLY. REFER TO SPECIFICATIONS
2. 300HV PROTECTION FABRIC IS NOT REQUIRED WHEN PLACING RUBBER PAVERS OVER EPDM MEMBRANE
3. RUBBER PAVERS MUST BE INSTALLED UNDER COMPRESSION. REFER TO VERSICO'S RUBBER PAVER INSTALLATION GUIDE FOR MORE INFORMATION.

VERSICO ROOFING SYSTEMS

© 2023 VERSICO

- EPDM/TPO/PVC
- 0 SEE NOTE(S)
- HP PROTECTIVE MAT
- 300HV PROTECTION FABRIC

RUBBER INTERLOCKING PAVERS

2022 PAVER DETAILS

DETAIL NO. PD1 RA

AFTER ALL PAVERS ARE INSTALLED, CARLISLE RUBBER PAVER ADHESIVE SHALL BE APPLIED IN ALL PAVER TO PAVER JOINTS USING VERSICO'S SPECIALIZED RUBBER PAVER ADHESIVE APPLICATION TIP

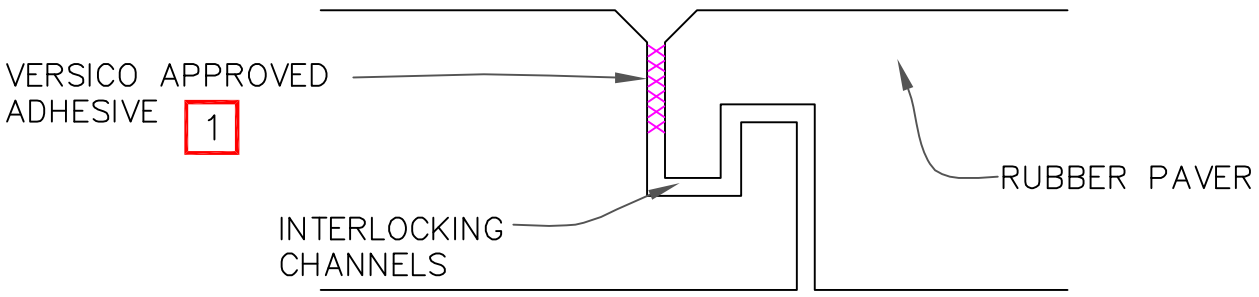

NOTES:

1. ADHESIVE SHALL BE APPLIED BETWEEN THE VERTICAL WALLS OF THE INTERLOCKING JOINT AND NOT ON THE BOTTOM OF THE CHANNEL

2. SEE VERSICO'S RUBBER PAVER INSTALLATION GUIDE FOR MORE INFORMATION

ADHESIVE APPLICATION TIP

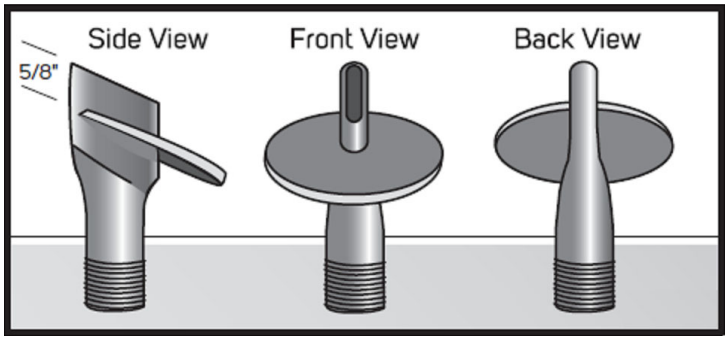

PROPER ADHESIVE APPLICATION

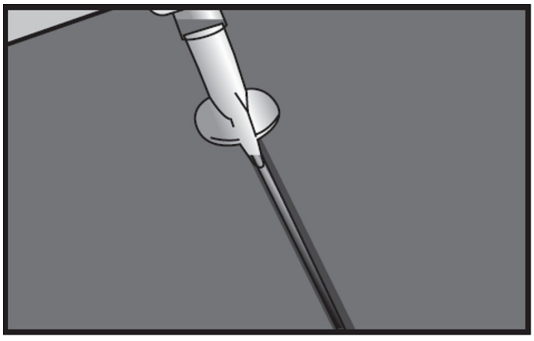

VERSICO ROOFING SYSTEMS
© 2023 VERSICO

EPDM/TPO/PVC
0 SEE NOTE(S)
HP PROTECTIVE MAT
300HV PROTECTION FABRIC

RUBBER PAVER JOINT ADHESIVE APPLICATION

2022 PAVER DETAILS

DETAIL NO. PD1 R4.1

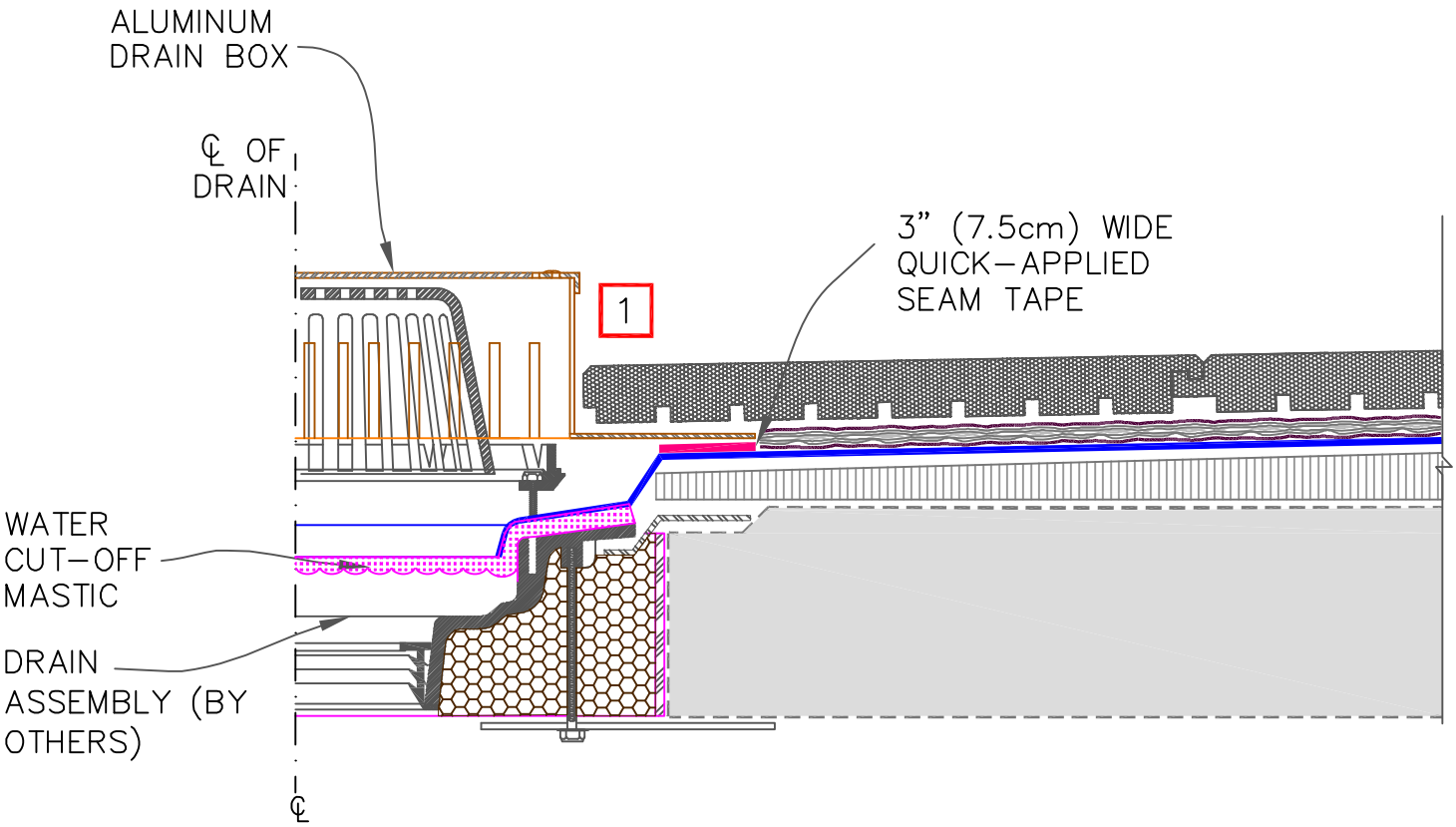

NOTE:

1. RUBBER PAVERS SHOULD BUTT TIGHTLY TO DRAIN BOXES TO MAINTAIN COMPRESSION.

VERSICO ROOFING SYSTEMS
© 2023 VERSICO

- EPDM/TPO/PVC
- 0 SEE NOTE(S)
- HP PROTECTIVE MAT
- 300HV PROTECTION FABRIC

DRAIN DETAIL RUBBER PAVER

2022 PAVER DETAILS

DETAIL NO. PD1 R6.1

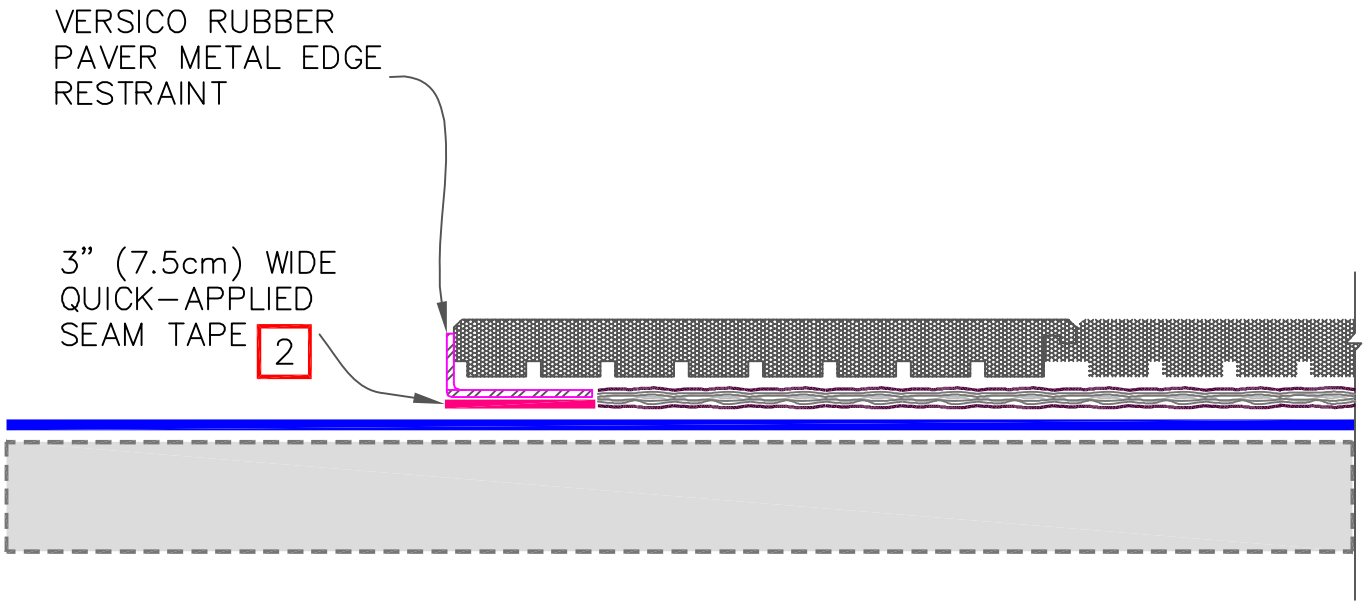

NOTES:

1. RUBBER PAVER EDGE RESTRAINT SHOULD BE USED TO TERMINATE THE RUBBER PAVERS WHEN NOT BUTTED TO A PARAPET WALL OR FIXED CURB

2. RUBBER PAVER EDGE RESTRAINT IS ADHERED TO MEMBRANE USING APPLICABLE PRIMER AND QUICK-APPLIED SEAM TAPE. QUICK-APPLIED SEAM TAPE SHALL EXTEND 1/4" (1cm) BEYOND EDGE OF METAL EDGE TO PROTECT ROOF MEMBRANE FROM METAL BURRS & CORNERS

VERSICO ROOFING SYSTEMS
© 2023 VERSICO

- EPDM/TPO/PVC
- 0 SEE NOTE(S)
- HP PROTECTIVE MAT
- 300HV PROTECTION FABRIC

HORIZONTAL TERMINATION AESTHETIC OPTION

2022 PAVER DETAILS

DETAIL NO. PD|R12.3

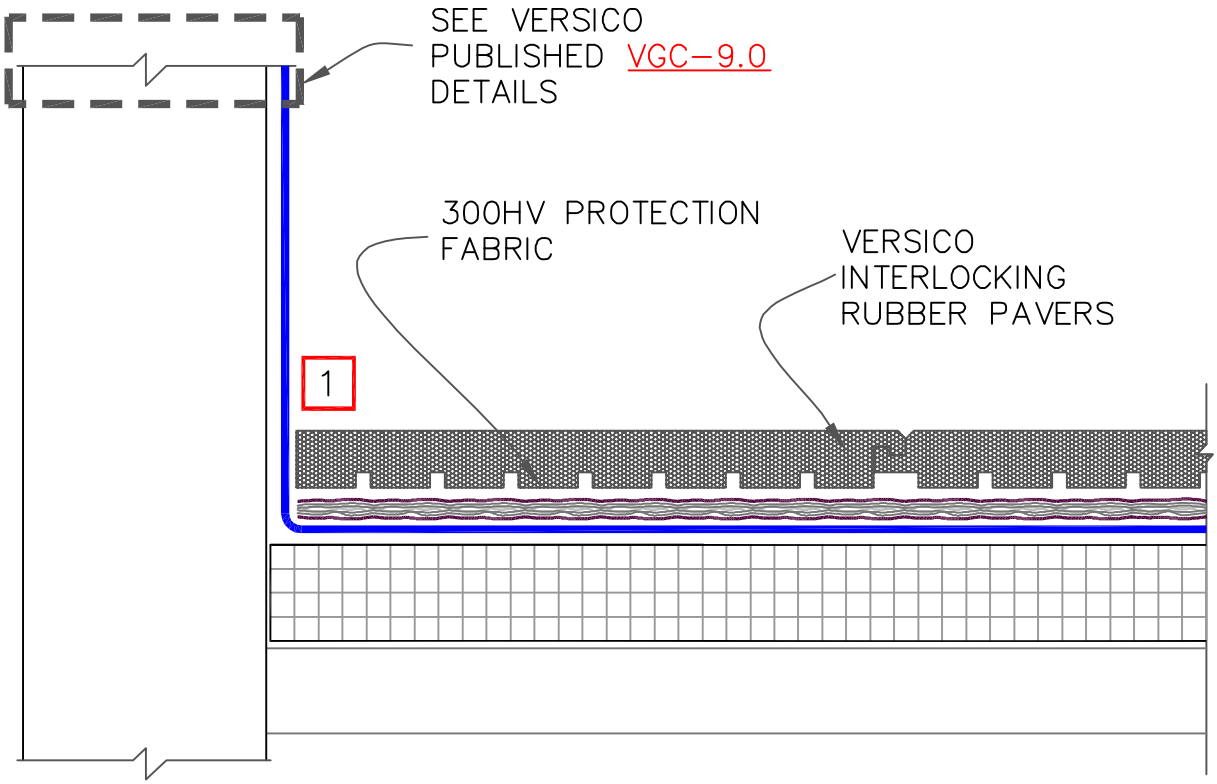

NOTE:

1. RUBBER PAVERS SHOULD BUTT TIGHTLY TO PARAPET WALLS. REFER TO VERSICO'S RUBBER PAVER INSTALLATION GUIDE FOR MORE INFORMATION.

VERSICO ROOFING SYSTEMS
© 2023 VERSICO

- EPDM/TPO/PVC
- 0 SEE NOTE(S)
- HP PROTECTIVE MAT
- 300HV PROTECTION FABRIC

PARAPET WALL TERMINATION

2022 PAVER DETAILS

DETAIL NO. PD|R12.4

SPECIFICATION SUPPLEMENT

G-17-24

Electronic Leak Detection (ELD) Systems

January 2024

The information contained in this supplement serves as criteria for Specifiers and Authorized Contractors regarding the design and installation of Versico Roofing Systems and related products. Additional information essential for the design and installation of the Roof Systems mentioned herein are also included in the respective Specification for each Roof System and in the Design Reference Section of the Versico Technical Manual. Specifiers and Authorized Contractors are advised to reference all applicable sections.

A. Introduction

Verifying the watertightness of roofing is important, especially if it is to be covered with pavers, ballast, or a vegetated roof assembly. This verification is a field quality-control measure beyond the scope of visual inspections for issuance of a warranty. A common practice used is flood testing the roof using ASTM D5957 as a standard guide. However, using the flood test method can introduce large amounts of water to a new roof assembly if there is a serious leak. Electronic Leak Detection uses a small amount of water, or no water at all, depending on the method used, so the introduction of large amounts of water is not an issue. The advantages of low-voltage electrical conductance testing over traditional flood testing are its capability of providing leak detection throughout the life of the roofing, precisely locating leaks, and with some testing methods, the ability to test sloped roofs and vertical walls. Thereby making it a Quality Assurance test, at time of installation and an Evaluation or Forensic Tool for investigating leaks or breaches in the roof membrane throughout its service life, when the membrane is exposed.

Electronic Leak Detection (ELD) - A non-destructive test that uses a brush, broom, roller, platform, or probes, along with low- or high-voltage electrical current, to find breaches, holes, and seam voids in the roof membrane or flashings by completing a circuit with the electrical charge. In low-voltage ELD testing, A breach-free membrane will block any water and therefore, any electrical current. If a leak is present, the water will make its way through the membrane and must touch an electrically grounded conductive substrate directly below the membrane. This allows an electrical circuit to be completed and the testing equipment and technician to accurately pinpoint the membrane breach, limiting the repairs needed to the areas where damage has been identified instead of replacing or repairing the entire roof.

Electronic leak-testing methods are outlined in **ASTM Guide D7877-14 "Standard Guide for Electronic Methods for Detecting and Locating Leaks in Waterproofing Membranes"** which lists the four different ELD test methods. Those four test methods are: **Low-Voltage Scanning Platform, Low-Voltage Vertical Roller, Low-Voltage Electronic Field Vector Mapping, and High-Voltage Spark or Holiday Testing**. All four of the ELD test methods require the same basic requirements: A conductive substrate must be present directly below the membrane. A valid ground connection must be provided. The membrane must be exposed. The roof system must have a continuous, unbroken electrical path from the top of the membrane to the conductive substrate below.

1. **Low-Voltage Scanning Platform Testing** is a specific system which uses a small scanning platform, called IntegriScan™, a proprietary system by Detec Systems. This system is described in ASTM D7877 as well as in ASTM D8231 “Standard Practice for the Use of a Low Voltage Electronic Scanning System for Detecting and Locating Breaches in Roofing and Waterproofing Membranes”. The platform is approximately 18 by 24 inches (457 by 609 mm) and incorporates a perimeter wire loop of chains that hang from the platform and make contact with water on the roof surface, and a separate line of chains located in the center of the platform. Both series of chains are connected to a low-voltage power source. The platform is moved along the surface of the roof

VERSICO ROOFING SYSTEMS

membrane to detect breaches in the roof membrane.

When utilized with a conductive primer directly below the membrane, this system works with electrically conductive roof materials such as black EPDM, which contains carbon black, or with roof membranes that have aluminized protective coatings, commonly used on modified bituminous membranes.

2. **Low-Voltage Vertical Roller Testing** is a specific system which uses a Vertical Scanning Unit (VSU Roller) as part of IntegriScan™, a proprietary system by Detec Systems. This system is described in ASTM D7877 as well as in ASTM D8231 “Standard Practice for the Use of a Low Voltage Electronic Scanning System for Detecting and Locating Breaches in Roofing and Waterproofing Membranes”. The VSU Roller utilizes a 3/8” nap by 9” roller. The VSU Roller is moved along the vertical surface of the roof membrane or flashings to detect breaches in the roof membrane or flashings.

3. **Low-Voltage Electronic Field Vector Mapping (EFVM) testing** works by grounding a conductive roof deck, such as steel, beneath a nonconductive roof membrane and locating places where the electric field goes through the roof. This process is accomplished by dampening the roof and placing an uninsulated wire loop around the perimeter of the area to be tested and around any grounded objects to isolate the testing area. The wire loop is connected to a low-voltage pulsating generator that emits a one second 40-V charge every three seconds, creating a momentary electric field between the wire loop and the grounded roof deck. The roof membrane acts as an insulator between the electrified wire loop and the roof deck. Electrical charges over the moist membrane surface will be random unless there is a discontinuity or "leak" in the membrane. If there is a leak, a directional current is created that can be followed to the leak using a potentiometer that is connected to two probes that make contact with the roof surface. For conventional and nonconductive roof decks, such as wood, a conductive medium must be built into the roof assembly. Common mediums include welded stainless-steel mesh for adhered roof systems, a conductive primer for adhered systems, aluminum screen for loosely laid roof systems, and a conductive fabric for use with loosely laid and mechanically fastened roof systems.

   Additionally, this testing method will not work with an electrically conductive roof material such as black EPDM, which contains carbon black, or with roof membranes that have aluminized protective coatings, commonly used on modified bituminous membranes. Continuous water contact must be maintained with the perimeter wire, the testing probes and through the breach in the roof membrane to the conductive material (metal roof deck or conductive medium), or the breach will not be detected.

4. **High-Voltage Spark or Holiday testing** uses 1000- to 30,000-Volts od DC power and does not require a wet membrane or perimeter wire loop. The system uses an electrically charged metal "broom" connected to the power source, which is grounded to a conductive roof deck or a conductive medium. When the metal broom passes over a discontinuity in the dry roof membrane, the electrical circuit is completed, and an audible sound and a visible spark is generated by the testing equipment.

   Additionally, this testing method will not work with an electrically conductive roof material such as black EPDM, which contains carbon black, or with roof membranes that have aluminized protective coatings, commonly used on modified bituminous membranes. The roof membrane must be completely dry for this testing method to work. Due to the higher voltage used, more false positives have been reported and there is a greater injury risk associated with testing. Additionally, some concern has been expressed with the concept of dragging a wire broom across roof membranes and effect this friction may have on the membrane.

B. Description

The focus of this Spec Supplement is for Electronic Leak Detection with the use of Detec Systems’ TruGround Conductive Primer. Versico has collaborated with Detec Systems to offer many Factory Mutual (FM) rated and warrantable roof assemblies that include Detec's TruGround Conductive Primer. Detec Systems' patented TruGround

Conductive Primer is an easy to apply conductive medium that is needed to effectively test conventional roofing assemblies for breaches, holes, and seam voids using electronic leak detection (ELD) methods. ELD has become the preferred option for ensuring a watertight membrane on overburden installations and other critical building projects.

Detec's TruGround Conductive Primer is brush- or roller-applied to the substrate prior to adhesive and membrane application. Once the TruGround Conductive Primer has dried (typically 30 minutes), the bonding adhesive can be applied, and the membrane installed like any other roof system.

For leak detection to be accurate, the conductive medium must be installed directly below the roofing membrane. Alternative conductive mediums often raise concerns regarding membrane adhesion when placed directly below the membrane as required per ASTM D7877. These concerns often lead to improper placement of the conductive medium below a coverboard or insulation which invalidates the ELD testing.

Versico has conducted testing with FM as well as other 3rd party testing agencies to vet roof system performance when TruGround primer is added to the assembly.

The following roof assemblies have been tested and approved by FM with the addition of TruGround. These assemblies are eligible for the same FM rating as they would without TruGround. Contact Versico for associated RoofNav numbers.

FM Approvals		
Membrane Type	Adhesive	Substrates
EPDM	CAV-GRIP 3V	SecurShield Polyiso SecurShield HD Polyiso SecurShield HD Plus Polyiso Dens Deck Prime SECUROCK
TPO	CAV-GRIP 3V	SecurShield Polyiso SecurShield HD Polyiso SecurShield HD Plus Polyiso Dens Deck Prime SECUROCK
PVC	Low-VOC PVC Bonding Adhesive	Versicore Polyiso SecurShield Polyiso SecurShield HD Polyiso SecurShield HD Plus Polyiso

The following roof assemblies have been tested and approved by FM with the addition of TruGround, but are limited to an FM 1-90 rating. Contact Versico for associated RoofNav numbers.

FM Approvals		
Membrane Type	Adhesive	Substrates
VersiFleece	Flexible DASH (splatter method)	VersiCore Polyiso SecurShield Polyiso SecurShield HD Plus Polyiso Dens Deck Prime SECUROCK DuraStorm VSH
VersiFlex PVC	Hydrobond Bonding Adhesive	VersiCore Polyiso SecurShield Polyiso SecurShield HD Plus Polyiso Dens Deck Prime SECUROCK DuraStorm VSH

For projects that are not FM insured, Versico approves and warrants the use of Detec TruGround in all current roof assemblies. Versico warrants that the use of TruGround within the roof assembly will not detrimentally affect the performance of the roof assembly. Roof assemblies using TruGround can achieve the same uplift and warranty terms as the same assembly would be eligible for without TruGround.

C. Quality Assurance

1. The specified roofing system must be installed by a Versico Authorized Roofing Contractor in compliance with drawings and specifications as approved by Versico.

2. Roof system must be inspected and approved by a Technical Representative of Versico prior to Overburden System (Roof Garden, Pavers or Ballast) installation.

3. Do not install this assembly before the concrete deck has reached its' initial structural strength. Project Engineer must be consulted prior to job start-up.

D. Submittals

1. Shop drawings must be submitted to Versico by the Versico Authorized Roofing Contractor along with a completely executed Copy-A Job Approval Request for approval. Approved shop drawings are required for inspection of the roof and on projects where on-site technical assistance is requested.

2. Upon completion of the installed work, submit copies of the manufacturer's final inspection to the specifier prior to the issuance of the manufacturer's warranty.

E. Products

1. In addition to the products listed below, products listed in "Part II" of the Versico Thermoset/Thermoplastic/VersiFleece Roofing System Specification can be used as part of the Overburden System (Roof Garden, Pavers or Ballast) installation.

    a. Detec TruGround Conductive Primer - is a water-based, liquid-applied, electrically conductive primer that enables effective electronic leak detection (ELD) testing of conventional roof assemblies. Detec TruGround is brush- or roller-applied in a single-sided application to any properly prepared, non-conductive horizontal or vertical surface such as plywood, insulation, or gypsum cover boards. TruGround is compatible with high- and low-voltage ELD testing methods listed in ASTM Standard Guide D7877 and complies with ASTM Standard Practice D8231. TruGround is UL Listed and FM Approved in several Versico roofing assemblies.

F. Execution

Follow current specifications for installing roof membranes and seaming per specific membrane. [VersiGard (EPDM), VersiWeld (TPO) or VersiFlex (PVC/KEE HP)].

G. Installation

1. Start by liberally applying TruGround to the substrate T-Joints using a paint brush, this ensures electrical continuity between boards. If large gaps, those exceeding 1/8", are present between boards, apply seam tape to the T-Joints to act as a bridge, connecting the boards together. Then, when applying TruGround to the substrate boards (see step 2) ensure that it is also applied over the seam tape connecting the boards. Seam tape may need to be applied at vertical penetrations as well, if the gaps are too large to bridge with TruGround.

2. Apply a thin coat of TruGround over the entire project area using a 3/8" nap roller. If the surface is black, TruGround has been applied at the acceptable thickness. Coverage rate is typically 1250 square feet for most non-porous substrates.

3. Continue TruGround up and onto all metal/grounded penetrations a minimum of 1", not to exceed the height of the flashing. Testing equipment will be connected to these penetrations while conducting the ELD tests.

4. Once TruGround is dry to the touch (typically 30 minutes), proceed with installing the roofing system as outlined in the assembly tables within this Spec Supplement and in accordance with Versico published Specifications for the specific membrane type.

H. Associated System Diagram

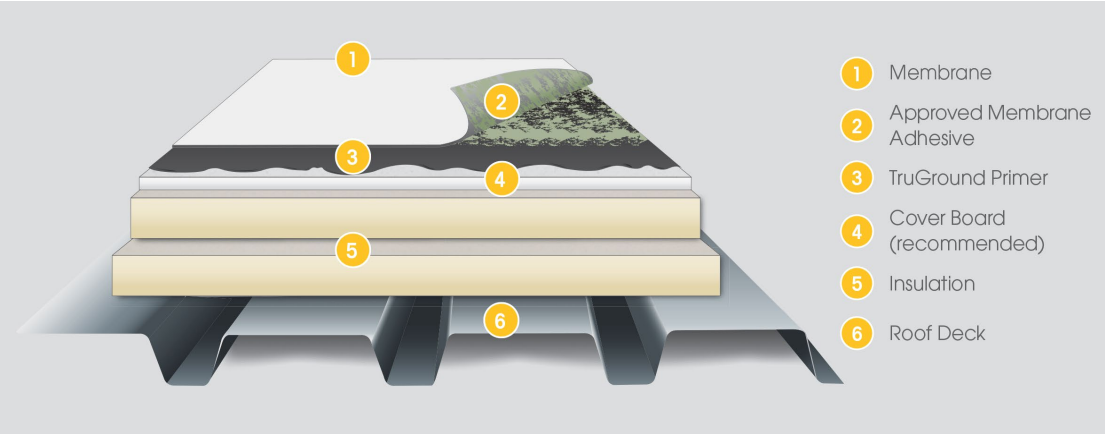

Typical Roof Assembly with Conductive Primer

End of Section

Copyright 2024 Versico
Versico, VersiGard, VersiWeld and VersiFlex are Trademarks of Versico

TruGround is a Trademarks of Detec Systems

This specification represents the applicable information available at the time of its publication. Owners, specifiers and Versico Authorized Roofing contractors should consult Versico or their Versico Independent Sales Representative for any information, which has subsequently been made available.
Review the appropriate Versico warranty for specific warranty coverage, terms, conditions and limitations.

SPECIFICATION SUPPLEMENT

P-01-22

Related Versico Products

January 2024

In addition to products included in the various roofing specification sections, Products listed herein are available from Versico and when used as part of the roofing system, they will be covered by the Versico warranty. Additional information concerning these products can also be found on individual Technical Data Bulletins or the Versico website.

A. **Edgings**

Refer to Spec Supplement G-10-18 "Metal Edging and Details" for various product listings.

B. **Termination Bar:** A 1" wide and 98-mil thick extruded aluminum bar pre-punched 6" on center which incorporates a sealant ledge to support Lap Sealant and provide increased stability for membrane terminations.

C. **VersiTrim Term Bar Fascia:** A 1.75" wide formed aluminum termination bar with pre-slotted fastening holes for ease of locating and installing. The decorative cover is available in 0.040" aluminum or 24-gauge galvanized steel. VersiTrim Term Bar Fascia is manufactured in 12' lengths for fewer joints/seams, fewer sections to handle and faster installation.

D. **Versico Vapor Retarder and accessories**

1. **Versico's VapAir Seal 725TR Air and Vapor Barrier** - A 40-mil thick composite consisting of 35-mil self-adhering rubberized asphalt membrane laminated to an 5-mil UV resistant poly film with an anti-skid surface which is fully compatible with Flexible DASH Adhesive. VapAir Seal 725TR can also function as a temporary roof for up to 120 days. Available in rolls 39" wide by 100' long (325 square feet).

Technical Data – Versico VapAir Seal 725TR Air and Vapor Barrier		
Property	**ASTM**	**Results**
Thickness	D-1970	40 mils
Tensile Strength	D-412	250 psi
Elongation (1)	D-412	250%
Peel Adhesion	D-903	5 lbs./in.
Puncture Resistance	E-154	60 lbs.
Permeability	E-1970(2)	0.015 perms
Air Permeance	E-2178	0.000L/s*m2 @ 75 Pa
(1)Rubberized asphalt compound only. (2)D 1970 is tested to E96 standards for permeability.		

2. **Versico's VapAir Seal MD Air and Vapor Barrier** – a reinforced composite aluminum foil with self-adhesive SBS backing and removable poly release film. Used for direct application over metal decks. Available in rolls 42.5" wide by 131.23' long (460 square feet).

Technical Data – Versico VapAir Seal MD Air and Vapor Barrier		
Property	**ASTM**	**Results**
Thickness	D-5147	15 mils
Tensile Strength	D-412	250 psi
Elongation	D-1970	330%
Peel Adhesion	D-903	14 lbs./in.
Puncture Resistance	D-5602	54.6 lbs.
Permeability	D-1970(1)	0.03 perms
Air Permeance	E-2178	0.000L/s*m2 @ 75 Pa
(1) D1970 is tested to E96 standards for permeability.		

3. **CCW-702 or 702LV Primer** - A single component, solvent based, high tack primer used to provide maximum adhesion between Versico725TR Air and Vapor Barrier and an approved substrate. Applied by spray or long nap roller with a coverage rating ranging from approximately 300 to 350 square feet per gallon on smooth finishes (i.e., concrete) to 75 square feet per gallon on porous surfaces (i.e., DensDeck Prime gypsum board). Available in 5-gallon containers. CCW-702LV Primer contains less than 250g/L VOCs and meets South Coast Air Quality Management District (SCAQMD) and Leadership in Energy and Environmental Design (LEED) Requirements for Volatile Organic Compounds. Available in 5-gallon containers.

Technical Data – Versico 702 Primer		702 LV Primer
Property	**Results**	**Results**
Weight Per Gallon (lbs)	7.7	7.5
Solids Content (% by weight)	38%	46%
VOC Content	540 g/l	Less than 250 g/l
Color	Blue	Plum Red
Flash Point	-4° F	-4° F
Adhesion to Concrete (1b/lin. In.)	7	11

4. **CCW-702WB –** a high-tack, water-based contact adhesive for promoting adhesion of Versico air/vapor barrier membranes and an approved substrate (i.e., concrete, Dens-Deck Prime and Securock). Applied by roller, brush or spray with an application rate of approximately 200 sq. ft. per gallon. Available in 5-gallon containers. CCW-702WB Primer contains 57g/L VOCs and meets South Coast Air Quality Management District (SCAQMD) and Leadership in Energy and Environmental Design (LEED) Requirements for Volatile Organic Compounds.

5. **CAV-GRIP 3V Low-VOC Adhesive/Primer:** a Low-VOC, methylene chloride-free adhesive that can be used for a variety of applications including: bonding VersiWeld membrane to various surfaces, enhancing the bond between Versico's VapAir Seal 725TR and various substrates, priming unexposed asphalt prior to applying Flexible DASH Adhesive and for adhering VersiWeld/VersiFlex VersiFleece and VersiGard EPDM or VersiWeld TPO membrane to vertical walls and horizontally, for the field of the roof. Coverage rate is approximately 2,000-2,500 sq. ft. per #40 cylinder and 4,000-5,000 sq. ft. per #85 cylinder as a primer, in a single-sided application; 750 sq. ft. per #40 cylinder and 1,500 sq. ft. per #85 cylinder as an adhesive for vertical walls, in a double-sided application; 1,000 sq. ft. per #40 cylinder and 2,000 sq. ft. per #85 cylinder as an adhesive, horizontally, for the field of the roof, in a double-sided application.

6. **VapAir Seal Flashing Foam:** a low-pressure foam system that utilizes a non-flammable blowing agent. VapAir Seal Flashing Foam has been specifically formulated for flame retardancy and conforms to the requirements of ASTM E84 as a “Class 2(B)” system (flame spread of 75 or less, smoke development of 450 or less). The foam is used to seal penetrations and helps to lower heating and cooling costs by reducing air leakage.

VapAir Seal Flashing Foam Packaging and Yields		
Size	41 lbs packaging	115 lbs packaging
Board Feet	205 (19m²)	605 (56.2m²)
Linear Feet - 1" Bead	3,132	9,236
Linear Feet - 2" Bead	783	2,309
Note: Yields are based on cured material.		

E. **Daylighting Products and Accessories**

1. **Skylights**

a. **SunPath:** A tubular daylighting system, consisting of roof dome, reflective tube, and diffuser assembly that meet the following specifications and whose configuration will be indicated as per drawings:

1. Roof Dome Assembly: Transparent, UV and impact resistant dome with flashing supporting dome and top of tube.

a) Outer Dome Glazing: 0.177 inch (4.5 mm) minimum thickness impact resistant acrylic classified as CC2 material. Visible light transmission minimum 92 percent.
b) Flashing Base: One piece, seamless, leak-proof flashing functioning as base support dome and top of tube.

c) Base Material: Aluminum, .80 thickness, 9 inches (229 mm) high.

2. Reflective Extension Tube: Aluminum sheet, thickness 0.02 inch (0.508 mm).

a) Interior Finish: high reflectance specular finish on exposed reflective surface. Visible spectrum greater than 97 percent.

3. Dual Glazed Diffuser Assembly:

a) Upper glazing: Acrylic plastic classified as CC2 material. The nominal thickness is 0.060 inches.

b) Lower glazing: Acrylic plastic classified as CC2 material. The nominal thickness is 0.090 inches (2.29 mm).

4. The skylight dome is vacuum formed from 100% modified impact acrylic that is seal locked onto an aluminum dome ring. Accessories include electric dimmer systems, lighting inserts, and security grills. Available in 5 diameter sizes: 10”, 13”, 18”, 21”, and 24”.

b. **SunWeld:** A factory assembled conventional skylight consisting of plastic glazing welded in place by a 6063-T5 extruded aluminum retaining angle and resting on an extruded aluminum inner frame. This product can be manufactured to any specified size or to fit existing curbs based on field dimensions and offers several glazing options including acrylic, polycarbonate, copolyester, fiberglass & prismatic acrylic. These units can be integrally attached to an insulated self-flashed metal curb and can be incorporated into the Versico Total Roof System warranty when a Versico system is being installed.

Size of Rough Opening	Size of Outside Curb Dimension
48” x 48”	51.50” x 51.50”
48” x 60”	51.50” x 63.50”
48” x 72”	51.50” x 75.50”
48” x 84”	51.50” x 87.50”
48” x 90”	51.50” x 93.50”
48” x 96”	51.50” x 99.50”
60” x 72”	33.50” x 75.50”

c. **SunWeld Plus Dynamic Dome:** Available in 18 standard sizes, the Dynamic Dome is an innovative product that balances the structural demands of industry professionals with an architecturally progressive design. Engineered to closely match the angles of the sun during low-light periods to harvest more sunlight to transfer indoors, the Dynamic Dome offers uncompromising strength and a visually stunning design. These units can be integrally attached to an insulated self-flashed metal curb and can be incorporated into the Versico warranty when a Versico Roofing system is being installed.

2. **SunWeld Heat/Smoke Vents**-Two types are available as follows: the ***Drop-Out*** option is glazed with a special heat sensing material that when activated, softens the glazing material and releases it from the retainer frame, venting smoke and gas. The ***Mechanical*** smoke vent is a fusible link-activated, spring loaded assembly that initiates the venting process with activation temperatures that range from 165° up to 500°. Sizes (both self-flashed and curb mount).

3. **Pre-Fabricated Metal-Factory curbs** shall be assembled, self-flashing units with all corners mitered and welded; 1” thick polyiso insulation shall be sandwiched between the outer shell and inner liner and a wood nailer shall be provided at the top of each side. Standard curbs shall be 12.00" tall with a 3.00" wide horizontal flashing flange at the bottom. Standard curbs shall be metal and offered as three types:

   a. Galvanized Steel – 18 gauge outer shell and 20-gauge inner liner.
   b. Structural Galvanized Steel - 14 gauge outer and-20 gauge inner liner.
   c. Mill Finish Aluminum – .050 outer shell and .025 inner liner.

4. **Skylight Accessories**

   a. **Flashing Boots** (Sleeves)-For roof curbs, this flashing accessory is manufactured from the applicable membrane material (PVC/TPO), and can accommodate all curb types.

   b. **Quick-Applied EPDM Curb Flashing-**Available for use with EPDM roof membrane installations.

   c. **Security Grills/Fall Protection Screens-**Available for use with the skylights as deterrents to break-ins as well as to help meet OSHA safety requirements.

   d. **Metal Deck Support Kit**-An installation accessory that provides skylight structural support and facilitates the metal deck retrofit installation process.

e. **Curb Adapter**-Serves as a structural transition piece that can either reduce or extend existing curb dimensions in order to accommodate the installation of standard Drylight sizes on existing curbs and still allow the Drylights to be included under the Versico Total Roof System Warranty. Curb adapters are manufactured from minimum 18-gauge Mill Finish Aluminum and shall be assembled with all corners mitered and welded. Adapters are insulated with 1.00" thick high density fiberglass insulation with a white plastic waterproof facer attached.

F. **Other Products**

1. **Versico GreenGuard PB6 Fanfold Roof Recover Board:** A high-density 3-lb density extruded polystyrene (XPS) foam core with 3-ply film facers on both sides for use as a recover board. Available 3/8" thick and 4' x 50' (2 squares) and weights 20 lbs per unit.

2. **Versico Type VI Felt:** A heavyweight fiberglass mat containing heat-cured resinous binders saturated with Type IV asphalt. The Type VI felt is heavier weight than a Type IV giving the felt additional breaking strength and dimensional stability. The Type IV felt can be mopped or cold applied over a nailed base sheet or two plies mopped over a concrete or approved surface achieving a vapor/air retarder. Available in rolls 36" wide and 180' long (540 square feet). Meets ASTM D2178 and UL-G1.

3. **Versico Type IV Felt:** A heavyweight fiberglass mat containing heat-cured resinous binders saturated with Type IV asphalt, giving the felt excellent breaking strength as well as dimensional stability. The Type IV felt can be mopped or cold applied over a nailed base sheet or two piles mopped over a concrete or approved surface achieving a vapor/air retarder. Available in rolls 36" wide and 180' long (540 square feet). Meets ASTM D2178 and UL-G2.

4. **FR Base Sheet 1S:** A non-asphaltic fiberglass-based underlayment that meets or exceeds ASTM D226 or D4869 Type I or II performance. In conjunction with Hot Mopped Systems, the FR Base Sheet can be incorporated to provide a suitable substrate for deck types requiring a fastened base. Available 4' x 250' roll (1000 square foot) weighing 0.09 lbs per square foot.

5. **SureMB G2 Base Sheet:** A non-porous 28 pound base sheet uniquely designed and constructed to be strong while remaining wrinkle resistant. Versico's SureMB G2 Base Sheet is typically mechanically attached (using Versico approved fasteners) to the light concrete, gypsum or tectum substrate as the first ply and subsequent layers of G2 base sheet, Type IV or Type VI Glass felt is mopped or cold applied to the base-ply to achieve a vapor/air barrier. Available in rolls 36" wide and 108' long (324 square feet). Meets ASTM D4601 Type II and UL-G2.
6. **SureMB Vented Base:** A heavyweight venting base sheet constructed from a fiberglass mat coated with weathering-grade asphalt which meets ASTM D4897 Type II and UL-G2. Typically used as a venting base sheet over lightweight insulating concrete or gypsum decks, used in conjunction with Versico Dual Prong Base Sheet Fastener. Available in rolls 39-3/8" wide and 33' long (100 square feet) and weighing 0.86 lbs per square foot.

7. **SureMB 70 SA Base Ply:** 70-mil smooth surface, self-adhered base ply. Reinforced with a fiberglass mat that is saturated and coated with asphaltic bitumen and SBS elastomer and meets ASTM D6163 Type 1, Grade S. 70 SA is designed to be used as a base ply or interplay in Versico's multiple-ply system and can be used as an air and vapor barrier or temporary (up to 60 days) roof.

8. **SureMB 90TG Base: 9**4-mil smooth-surfaced, SBS, torch-applied membrane. Reinforced with a fiberglass mat that is saturated and coated with asphaltic bitumen and SBS elastomers which meets ASTM D6163 Type I, Grade S. SureMB 90TG is designed for use as a base-ply or inter-ply in Versico's multiple-ply system and can be used as an air barrier, vapor barrier or temporary (Up to 60 days) roof. Available in rolls 39-3/8" wide and 49'-1" long (164 square feet) and weighing 0.57 lbs per square foot.

9. **SureMB 90 Base Ply: 9**0-mil Glass fiber, reinforced, SBS-modified asphalt, base sheet that meets ASTM D 6163 Type I, Grade S for SBS-modified bituminous sheet materials. May be used as an air barrier,

vapor barrier and temporary (Up to 60 days) roof. Available in 39-3/8" wide and 49'-1" long (161 square feet) weighing 0.58 lbs per square foot.

10. **SureMB 120TG Base:** 120-mil smooth-surfaced, torch-grade SBS base ply, reinforced with a non-woven polyester mat that is saturated and coated with asphaltic bitumen and SBS elastomers that meets ASTM D6163 Type I, Grade S for SBS-modified bituminous sheet materials. Designed for use as a base-ply or inter-ply in Versico's multiple-ply system and may be used as an air barrier, vapor barrier or temporary (Up to 60 days) roof. Available in 39-3/8" wide and 32'-9" long (107 square feet) weighing 0.79 lbs per square foot.

11. **Versico Dual-Prong Fastener:** A factory pre-assembled, 1.8" long fastener consisting of a precision tube formed from galvanized (G-90) coated steel, a 2.7" diameter disk formed from Galvalume (AX-55) coated steel, and a locking staple of high tensile steel wire. Used to secure base sheets to cementitious wood fiber, lightweight concrete, and gypsum providing 70 lbs. of pullout resistance is achieved (40 lbs. Min.).

12. **Lite Deck Fastener:** An oversized diameter fastener and associated 3" Lite-Deck Metal Plate for use on Fully Adhered Roofing Systems to attach insulation to gypsum decks.

13. **Expansion Joint Supports:** A high quality formed EPDM expansion joint support for use with all VersiGard EPDM roofing systems; available in two profiles for use at expansion joints within the field of the roof and along parapet walls.

14. **HP Splice Wipes:** Used in conjunction with Splice Cleaners or EPDM Primer to clean membrane prior to splicing or applying Lap Sealant.

15. **Versico Interlocking Rubber Pavers**: A 2' by 2' by 2" thick rubber paver weighing approximately 24 pounds per unit, 6 pounds per square foot manufactured from recycled rubber, which provides a resilient, shock absorbing, weather resistant surface. Designed primarily for use as a walkway or on terrace areas offering a unique, environmentally sound advantage over concrete pavers. Features include freeze/thaw stability, bi-directional drainage and no breakage concerns. Available in black and terra cotta.

16. **SpeedTite Drains:** Retrofit roof drain with a one-piece seamless body and extra-large flange (17") for positive attachment to roof flashing. Built-in Vortex breaker technology which is designed to provide improved flow performance. Available in 3" and 4" sizes.

17. **Hercules Insert Drains:** Retrofit roof drain with a one-piece spun aluminum body and heavy-duty cast aluminum strainer dome and clamping ring. Designed for use in EPDM, TPO, and PVC**.** Available in 3", 4", 5" and 6" sizes with a 12" long drain stem.

18. **Olympic Pipe Support System:** A non-penetrating support system designed to carry piping, conduit, ductwork and elevated walkways across the roof or to support equipment such as air conditioners on the roof.

19. **X-Tenda Coat Acrylic Coating:** A water-based color coating used with EPDM membrane. Available in standard colors of white and gray.

20. **SecurTaper:** An ergonomic equipment innovation designed to provide a means for tape seam application that is efficiently driven, user friendly and quality enhancing.

21. **6" QA Flashing Applicator**: Similar in concept to the SecurTaper only used to apply Quick-Applied Flashing.

22. **Stand Up Seam Roller:** A 6" wide by 2" diameter roller and 62" long handle with a 45° bend. Allows splices to be rolled in an ergonomic stand-up position.

23. **APEEL Cover Tape Applicator:** A 6" wide by 2" diameter roller and 62" long handle with a 45□ bend.

Allows splices to be rolled in an ergonomic stand-up position.

24. **Other Accessories Available**: 6" blade heavy-duty scissors and 2" wide steel hand rollers.

    a. **Expansion Joint Supports**: A high quality extruded EPDM expansion joint support for use with all VersiGard EPDM (Black and White on black), VersiWeld TPO, VersiFlex PVC and KEE HP Roofing Systems; available in two profiles for use at expansion joints within the field of the roof and along parapet walls.

    b. **Other Accessories Available:** 6" blade heavy-duty scissors and 2" wide steel hand rollers.

G. **Insulation Adhesive**

1. **Flexible DASH Adhesive:** A spray (full coverage) or bead-applied, two-component polyurethane, construction grade, low-rise expanding foam adhesive used for attaching VersiFleece Membranes or approved insulations to compatible roof decks (concrete, cellular lightweight insulating concrete, gypsum, cementitious wood fiber, wood or steel) or existing smooth or gravel surfaced BUR, modified bitumen or cap sheets.

2. **Versico's Flexible DASH in Dual Cartridge, Dual Tank and 5-Gallon Jug Adhesive:** A two component (Part A and B), extrusion applied, low rise adhesive for attaching approved insulation to compatible roof decks.

3. **OlyBond 500 BA and Spot Shot:** A two-component, polyurethane construction grade, low-rising expanding adhesive designed for bonding insulation to various substrates. Applied in 1/2" to 3/4" beads or ribbons using a portable 1:1 applicator (oversized, dual-cartridge caulking gun). **Refer to the Technical Data Bulletin for bead spacing with reference to building height.**

H. **Miscellaneous**

1. **Versico Seam Probe**: A hand tool used to check the integrity of heat welded seams on heat welded roofing systems. The probe has a heat-treated tip and the handle is tapped to fit standard threaded extension handles allowing the tool to be used from a standing position.

I. **Accessory Vents**

1. **VersiWeld TPO T-Top Vent:** Constructed using 60-mil TPO Detail Membrane, which provides enhanced flexibility and allows for the elimination of T-Joint Covers at three-way membrane intersections. White in color and manufactured in standard sizes of 4", 6", and 8". Additional sizes and colors are available on a special-order basis.

2. **VersiFlex™ PVC T-Top Vent**: Constructed using 60-mil PVC KEE HP Membrane, which provides excellent long-term weathering protection. White in color and manufactured in standard sizes of 4", 6", and 8". Additional sizes and colors are available on a special-order basis.

3. **VersiWeld TPO Square Top Vent:** Constructed using 60-mil TPO Detail Membrane, which provides enhanced flexibility and allows for the elimination of T-Joint Covers at three-way membrane intersections. White in color and available in a nominal size of 8". Additional colors are offered on a special-order basis. Custom sizes of Square Top Vents are not available.

4. **VersiFlex™ PVC Square Top Vent**: Constructed using 60-mil PVC KEE HP Membrane, which provides excellent long-term weathering protection. White in color and available in a nominal size of 8". Additional colors are offered on a special-order basis.

5. **Non-Weldable One- and Two-Way Pressure Relief Breather Vent:** 8" tall, spun aluminum vent with a base diameter of 11" and stack diameter of 5". Engineered to allow moisture and air to escape from within the roofing system. May be used in conjunction with Versico's DeckVent EPS Insulation for a roof assembly

over Lightweight Structural Concrete (See **Spec Supplement G-15-19**) or in conjunction with VersiFleece AC (EPDM and TPO) membranes over Lightweight Insulating Concrete (See **Spec Supplement G-04-19**).

6. **Weldable One- and Two-Way Pressure Relief Breather Vent:** 5.5” tall, stainless steel vent with a 60-mil weldable flange, a base diameter of 14” and stack diameter of 4”. Engineered to allow moisture and air to escape from within the roofing system. May be used in conjunction with Versico’s DeckVent EPS Insulation for a roof assembly over Lightweight Structural Concrete (See **Spec Supplement G-15-19**) or in conjunction with VersiFleece AC (EPDM and TPO) membranes over Lightweight Insulating Concrete (See **Spec Supplement G-04-19**).

Copyright 2024 Versico

Versico, VersiTrim and VersiGard are Trademarks of Versico
Olybond is a Trademark of OMG, Inc.

This specification represents the applicable information available at the time of its publication. Owners, specifiers and Versico authorized roofing contractors should consult Versico or their Versico Independent Sales Representative for any information, which has subsequently been made available.

Review the appropriate Versico Warranty for specific warranty coverage, terms, conditions and limitations.

SPECIFICATION
SUPPLEMENT

T-01-23

Heat Welding Equipment Use & Procedures Thermoplastic Membranes

January 2024

The information contained in this supplement serves as a criteria for Specifiers and Authorized Contractors regarding the design and installation of Versico Roofing Systems and related products. Additional information essential for the design and installation of the Roof Systems mentioned herein are also included in the respective Specification for each Roof System and in the Design Reference Section of the Versico Technical Manual. Specifiers and Authorized Contractors are advised to reference all applicable sections.

A. **Automatic Heat Welder**

An electrically powered, self- propelled device that utilizes an electrical resistance heating element or heater and fan-forced super heated air to weld membrane seams.

1. **Temperature Settings**

a. When making a VersiWeld TPO/VersiFlex PVC splice, no one temperature setting or speed can be used to describe the temperature setting or speed to set the robot. The splice must be tested to determine the quality of the splice.

b. Consult the respective heat welding machine manufacturer for recommendations concerning proper temperature setting and speed control of their equipment.

c. Typically, the colder the ambient temperature (and likewise the membrane temperature) the slower the Automatic Heat Welder speed control must be adjusted to produce proper seams.

d. As a general guide, depending on the length of the nozzle, **VersiWeld** membranes will weld at a lower temperature 1004° F (540° C) and faster speed (12 feet to 18 feet per minute) than most other heat welded membrane materials. **VersiFlex** membrane will weld at a temperature of 1094° F (590° C) and a speed of 8 feet to 12 feet per minute.

e. Using an Automatic Heat Welder, the suggested starting point for welder set up is 1004° F (540° C) at 12.5 feet per minute for VersiWeld OR 1094° F (590° C) at 10.4' per minute for VersiFlex. Refer to automatic heat welder manufacturer's recommended temperature and speed to obtain the correct splice results.

f. The following is a list of items to be checked to determine the temperature setting and the speed at which a splice should be completed:

1) When the membrane is in direct sunlight, the temperature or robot speed may have to be adjusted when moving into a shaded area, check the splice results. Remember the membrane surface in a shaded area will be cooler than a membrane surface that is in sunlight. Darker colored membrane (such as gray) will be warmer than white and may affect the welder speed.

2) Dampness on the membrane from dew, a passing rain shower or misting condition will reduce heat from the splice due to evaporating moisture from the membrane surface. The heat welding temperature (increased) or the robot speed (slower) will have to be adjusted to produce a good splice. Water must be wiped from the welding surface prior to welding the splice.

3) Wind has a cooling affect as it blows over the surface. It will also affect the airflow in the splice

reducing the effectiveness of the hot air gun. This will require the operator to increase heat from the hot air gun or reduce the welder speed.

4) Substrates make a substantial difference in the amount of heat required to produce a proper heat welded splice. The robot will have to be adjusted accordingly:

   a) Plywood and Concrete act as heat sinks and will take a higher temperature or slower speed setting than insulation.

   b) Cool damp substrates will take a higher temperature or slower speed setting than dry substrates.

5) Membrane “bleed-out” from sheets should occur with VersiFlex membrane if properly welded. If bleed-out is not occurring (the underside of the membrane begins to melt and flow), the welder speed should be decreased to increase welding temperature.

2. **Equipment Set-up**

   a. Equipment set up is the responsibility of the Authorized Contractor. When poor welding is occurring check the following:

      1) If the membrane is overheated on one side or the other, check the nozzle to be sure it is distributing the heat evenly between the two sheets.

      2) If the heat is bypassing the edge of the sheet producing a cold weld along the edge of the splice, be sure the nozzle is completely under the sheet and the air dam is in place and functional.

      3) If the probed splice is tight at the edge but a cold weld is present in center of the splice (the heat is melting the edges but does not melt the center of the splice), check to be sure the robot is not running too fast.

      4) Ensure the silicone pressure wheel is intact with no voids in the silicone. If voids are present, incomplete welding will result.

      5) Be sure all wheels on the air dam are not binding. Binding wheels will cause sheet movement and distortion during the welding process.

      6) The automatic heat welder nozzle should be adjusted as close to the pressure wheel as possible. If the nozzle is too far away from the pressure wheel, distortion of the membrane may occur due to heat expansion.

      NOTE: Adjust welder nozzle so the curved portion (heel) extending outside the seam area does not contact or drag on the exposed surface of the membrane. This portion of the nozzle should be 1/16" to 1/8" above membrane surface.

      7) Overheating the membrane will cause poor welds. It is recommended the automatic welder be run not less than 8' a minute on average temperature days.

      8) Only on very cold days the welder should be run below this speed. The temperature and welder speeds must be determined based on test welds prior to actual sheet welding.

      9) Clean screen of dirt and debris on air inlet of heat gun every day. Accumulation of contaminants on screen will reduce air flow and heat output of welder.

3. **Membrane Welding**

   a. Prepare the Automatic Heat Welder and allow it to warm for approximately 5 to 10 minutes to reach operating temperature.

   b. Position the Automatic Heat Welder properly prior to seaming with the guide handle pointing in the same direction the machine will move along the seam.

   c. Lift the overlapping membrane sheet and insert the blower nozzle of the Automatic Heat Welder between the overlap. Immediately begin moving the machine along the seam to prevent burning the membrane.

d. Weight plates provided on Automatic Welders must be utilized.

e. Proceed along the seam ensuring that the small guide wheel in front of the machine aligns with the edge of the top membrane sheet. Guide the machine from the front only.

   CAUTION: Ensure the power cord has plenty of slack to prevent dragging the machine off course (which could result from a tightly stretched cord).

f. At all splice intersections, roll the seam with a silicone roller to ensure a continuous heat welded seam (the membrane should be creased into any membrane step-off with the edge of the silicone roller). A false weld may result due to surface irregularities created by multiple thicknesses of VersiWeld/VersiFlex membrane sheets..

   When using **60-mil or 80-mil** VersiWeld TPO Membrane or VersiFlex PVC Membrane, a **TPO/PVC "T" Joint Cover** must be applied over all "T" joint splice intersections.

g. To remove the Automatic Heat Welder from the finished splice, stop the movement of the machine and immediately remove the nozzle from the seam area.

h. Mark the end of the heat welded seam with a water-soluble marker for easy identification. A Hand Held Welder will be necessary to complete the weld in the area between where the Automatic Heat Welder is stopped and restarted.

i. Perform a test weld, at least, at the start of work each morning and afternoon. Test welds should be made if any changes in substrate or weather conditions occur.

4. **Preventing Membrane Creeping During Welding**

   a. The operator of the robot must apply foot pressure to the membrane, kicking and sliding the membrane under the robot to keep the membrane tight. Always have the operator stand on the unfastened sheet of membrane to prevent sheet movement.

   b. Do not release foot pressure from the membrane until the pressure wheel rolls over the membrane in front of the foot that is holding the membrane in place.

5. **Use of Welding Tracks**

   a. Set welding tracks lengthwise along the splice, close to the Automatic Heat Welder air dam to reduce membrane movement caused by the welding process. The operator must continue to apply foot pressure to the welding tracks to help hold the membrane splice in place. Welding tracks are moved as welder progresses along seam.

   b. Welding tracks can be:

      1) Sheet metal, 22 gauge – 12" wide by 10' long (with rounded corners).

      2) Aluminum or steel plates – 1/4" x 3", 4' to 6' long (with rounded corners).

      3) Wood planks – 2" x 12" X 4' to 6' long.

      4) Heavy plywood – 3/4" x 24" x 8' long.

6. **Test Cuts**

   a. Perform a test weld at least at the start of work each morning and afternoon.

   b. The test sample should be approximately 1 inch wide and longer than the width of the seam (cut across the heat welded seam).

   c. Peel the test sample apart after it has thoroughly cooled (approximately 10 minutes) and examine for a consistent 1-1/2 inch wide minimum weld. De-lamination of the membrane from the scrim-reinforcement is an indication of a properly welded seam.

   d. Identify the following seam problems to assure seam quality:

1) Discolored or scorched membrane – Increase speed or decrease temperature setting if membrane discolors.

2) Voids and wrinkles - A proper heat welded seam has no voids or wrinkles and must be at least 1-1/2 inches wide. Refer to Seam Probing procedures outlined below for proper inspection of seam deficiencies.

7. **Seam Probing**

The use of a Versico Seam Probe, a blunt or dull cotter pin puller is recommended to probe all heat-welded seams. Probing seams must be done once heat welds have thoroughly cooled. Heat welded seams must be probed throughout the day to check seam quality and to make proper adjustments to heat welding equipment. **The repair of deficiencies must be done routinely throughout the day but no later than the end of each workday.**

a. Allow heat-welded seams to cool thoroughly for approximately 30 minutes. Premature probing can damage warm seams.

b. Draw probing tool tip along the edge of the heat welded seam. Apply firm pressure to probe the seam junction, but not into the bottom membrane sheet. The tool will not penetrate into the lap area of a properly welded seam.

c. If the seam-probing tool penetrates into the lap area, mark the seam using a water-soluble marker at the beginning and the end of voids or wrinkles in the seam edge.

d. Repair seam deficiencies as soon as possible using the hand held welder. Versico recommends that repairs be made the same day they are discovered.

e. Probe **repaired seams** after they have cooled completely. If the repair is acceptable, wipe off the water soluble marker lines; if not acceptable, repair the seam using standard heat welded overlay procedures.

Note: All laps must be probed each day soon after it has cooled to verify the welder set-up is effective. Particular attention must be given to all membrane intersections and heat-welded seams at insulation joints. In addition, there should be periodic checks (including at the start of each day) to verify good peel strength.

f. Considerations when probing TPO systems:

1) TPO does not "flow" like PVC. If you observe an area in which you see "flow" of the bottom black ply, scorched areas of detail/flashing membrane, or scorched field membrane welds, these areas should be probed. If these areas are overheated to the point of membrane damage, an overlay repair will be required even if the weld probes successfully.

2) A properly heated field membrane weld will typically have a visual "sheen" approximately 1/2" wide on the bottom sheet at the weld overlap. When walking seams look for the sheen. If it is not present probe to ensure weld quality.

3) TPO seams require a minimum 1.5" weld. Welds less than 1.5" must be overlaid following specification and detail, even if probing does not produce deficiencies.

g. Considerations when probing PVC Systems:

1) Welds on PVC systems should produce "bleed out". Bleed out refers to the flow of the bottom ply (of the top sheet) outside of the weld. If you do not see bleed out at seam areas, this increases the probability the seam did not receive enough heat when it was welded. Be sure to probe these areas to ensure weld quality.

2) PVC is a “softer” and more flexible membrane than TPO. As such, a different probe should be used than the one used on TPO roofing systems. The PVC probe should have a blunt/dull tip.

h. PVC seams require a minimum 1.5" weld. If you observe welds which are less than 1.5", these should be overlaid following specification and detail, even if probing does not produce deficiencies

i. **Apply Cut-Edge Sealant** on all cut edges of the reinforced VersiWeld TPO membrane (where the scrim reinforcement is exposed) **after seam probing** is completed. When a 1/8" diameter bead of Cut-Edge Sealant is applied, approximately 225 – 275 linear feet of coverage per squeeze bottle can be achieved.

1) Cut Edge Sealant is not required on cut edges of VersiFlex PVC membrane (Horizontal or Vertical).

2) Cut-Edge Sealant is not required on vertical VersiWeld splices.

B. **Hot Air Hand Welder**

1. General

a. An electrically powered, hand-held device that utilizes an electrical resistance heating element or heater and fan-forced super heated air to heat weld VersiWeld/VersiFlex membrane and flashing. A hand-held **silicone** rubber roller is used in conjunction with the welder to apply the pressure that fuses the heated membrane surfaces to each other.

b. The hand-held welder is typically used to repair seams, or when the use of the Automatic Heat Welder is inappropriate (such as flashing penetrations and on high sloped surfaces).

2. Hand Held Welder Settings

a. Temperature setting for hand held welders when used for flashing should be approximately “6” (on a scale from 1 to 10).

b. Temperature settings for hand held welders when used for membrane should be approximately “8 –10” (on a scale from 1 to 10).

c. Exact settings will vary based on heat welding membrane type, ambient temperatures, substrate and type of welder.

d. Silicone roller should be used to apply pressure to the membrane to be welded.

C. **Electrical Cords:** For generator requirements and maximum length of electrical cords, refer to Generator/Electrical Requirements below.

D. **Seam Probing:** The probing of heat welded seams is an important step in the application of a VersiWeld TPO/VersiFlex PVC Roofing System. Versico recommends the use of a Versico Seam Probe to probe all heat welded seams. All seams must be probed (**after the seam has thoroughly cooled**) with the appropriate seam probing tool and all deficiencies must be repaired accordingly with a hand held hot air welder no later than the end of each work day.

E. **Silicone Rubber Roller**: A 2" wide rubber roller used for rolling heat welded splices.

F. **Generator/Electrical Requirements**

Building power supplies do not typically provide the proper amount of power necessary for consistent heat welding. The use of a portable generator conforming to the following guidelines is strongly advised.

1. A **minimum 6500 watt generator** with a minimum output of 210 volts is required **for one Automatic Heat Welder**. Reduced power availability will result if additional equipment is connected to the generator and may result in faulty heat welded seams. GFI (Ground Fault Interrupter) protection is recommended. Additional generators will be required for operating other power tools and hand held heat welders.

Electrical cords (3 conductors) of the maximum length indicated must be used with the corresponding wire as listed below:

Maximum Length	Wire Size
50 foot	#12
100 foot	#10
300 foot	#8

2. **A minimum 3,000 watt generator** may be used to power a maximum of **two hand held heat welders** as long as no other equipment is connected. This generator should service a minimum of 110 volts and be GFI (Ground Fault Interrupter) protected.

   Electrical cords (3 conductors) of the maximum length indicated must be used with the corresponding wire as listed below:

Maximum Length	Wire Size
50 foot	#14
100 foot	#12

   For extension cords longer than 100', consult an electrician or electrical contractor to ensure proper size of generator and wire.

G. **Heat Welding Precautions**

1. Check the welding machine set-up to ensure proper alignment of the heating nozzle, air dam, pressure wheels, or moving parts to see they move properly or are free-spinning. Test run the welding machine to ensure it moves forward following a straight line. If the alignment is off, make necessary adjustments.

2. Make sure the air intake is open. Clean out the air intake screen for the blower unit at each start up.

3. Check the machine for worn or broken parts which need to be replaced. Exercise care to protect the pressure wheel from notches or cuts to prevent incomplete sealing of the welded seam.

4. Before the machine is connected to the power source, make sure it is switched off to prevent a power surge that could damage the unit. Turn the unit on and allow the blower/heater unit to warm up for approximately 5 to 10 minutes to reach operating temperature.

5. Clean the heat nozzle with a wire brush to remove any build-up of membrane, as needed.

6. To extend the life of the heating element of the Heat Welding Equipment, always turn the temperature adjustment down so the welder can cool prior to switching the machine off.

7. Follow all care and maintenance instructions recommended by the respective manufacturer.

8. It is recommended that two Automatic Heat Welders and two generators be available at the project site in the event of mechanical failure.

H. **Welding Problems/Repairs**

1. A Hand Held Hot Air Welder and a 2" wide silicone roller must be used when repairing the membrane. When the entire heat welded seam is to be overlaid, an Automatic Heat Welder may be used.

2. Prior to proceeding with any repair procedure, the area to be repaired must be cleaned and any material which has been exposed approximately 7 days must be prepared with Versico Weathered Membrane Cleaner (VersiWeld TPO) or PVC or KEE HP Membrane Cleaner (VersiFlex PVC). The membrane can typically be repaired up to 6 months to a year with a standard cleaning method. In cases where the standard cleaning method is not sufficient, the following procedures must be used:

   a. Scrub the area to be welded with a “Scotch Brite” Pad and appropriate Membrane Cleaner.

   b. Clean all residue from the area to be welded with a Splice Wipe or a clean natural fiber (cotton) rag.

   c. Weld the new membrane to the cleaned area using standard welding procedures.

3. Voids in welded seams can be repaired using a Hand Held Hot Air Welder and a silicone roller. Depending on conditions, a splice overlay may be required.

4. Position the hand held welder facing into void so hot air is forced between overlapping membranes. Roll the top membrane surface using positive pressure toward the outer edge until the heated membrane surfaces are fused.

5. Exposed scrim-reinforcement (resulting from scorching surface of membrane) and test weld areas must be

repaired by overlaying the damaged area with a separate piece of membrane with rounded corners. The overlay must extend a minimum of 2 inches past the area to be repaired.

6. Probe all edges of the overlay once cooled to ensure a proper weld has been achieved.

7. Seal all cut edges of VersiWeld TPO Membrane with Cut-Edge Sealant. Cut-Edge sealant not required on cut edges of VersiFlex PVC Membrane (horizontal or vertical).

Note: The same overlay repair procedures may be used for punctures in the heat weldable membrane.

Copyright 2024 Versico

Versico, VersiWeld and VersiFlex are Trademarks of Versico

This specification represents the applicable information available at the time of its publication. Owners, specifiers and Versico authorized roofing contractors should consult Versico or their Versico Independent Sales Representative for any information, which has subsequently been made available.

Review the appropriate Versico warranty for specific warranty coverage, terms, conditions and limitations.

SPECIFICATION
SUPPLEMENT

E-01-21

VersiGard Polyepichlorohydrin (ECO/CO) Membrane / Application Procedure

January 2024

Information contained herein represents minimum requirements which must be complied with when overlaying any of Versico's VersiGard (black or white) EPDM roofing systems with Polyepichlorohydrin membrane to protect primary roofing membrane from grease and oil. Building owner or his/her representative must assess and determine the variety of fluids expected to be in contact with membrane and consult Versico concerning their compatibility.

A. Description

The VersiGard Polyepichlorohydrin (ECO/CO) membrane is especially designed to resist hydrocarbons, aromatic solvents, grease and oil and shall be used as an overlayment to protect existing VersiGard (black or white) EPDM membrane against minor or incidental oil spills.

The ECO/CO overlayment membrane is considered a maintenance items and not included under the coverage the warranted membrane roofing system.

1. For overlayment to a fully adhered or mechanically attached roofing system, the ECO/CO membrane adhered with G200SA Substrate Adhesive or Low VOC Bonding Adhesive.
2. When overlaying ballasted membrane (prior to installing the ballast) the ECO/CO membrane may be loose laid and then ballasted
3. At all edges allow a minimum width of 6" for splicing ECO/CO membrane onto the EPDM membrane.
4. In the area where the ECO/CO membrane is to be installed the roof slope shall be a minimum 1/4" in 12".

B. Related Products

1. **Versico Weathered Membrane Cleaner:** A clear, solvent-based cleaner used to clean the EPDM surface necessary for applying primer and VersiGard Lap Sealant. Available in 1 or 5-gallon pails.
2. **Low-VOC Membrane Cleaner:** A low VOC (volatile organic compound) cleaner (100% EPA-exempted solvents) used to loosen and remove dirt and other contaminants from the surface of exposed EPDM membrane prior to applying Versico EPDM Primer. Available in 1 and 5-gallon pails.
3. **G200SA Substrate Adhesive:** A high-strength, yellow colored, synthetic rubber adhesive used for bonding VersiGard (black or white) EPDM membranes to various surfaces. Available in 5 gallon pails.
4. **EPDM x-23 Low-VOC Bonding Adhesive**: A Low-VOC (volatile organic compound) bonding adhesive (less than 250 grams/liter) used for bonding VersiGard/VersiGard White EPDM membranes to various surfaces. Adhesive is available in 5 gallon pails.
5. **Low VOC Bonding Adhesive**: A low VOC (volatile organic compound) bonding adhesive (less than 250 grams/liter) used for bonding VersiGard (black or white) EPDM membranes to various surfaces. Available in 5 gallon pails.
6. **Solvent-Free EPDM Bonding Adhesive:** A solvent free, odor free, non-flammable, low VOC Bonding Adhesive used to adhere EPDM to multiple substrates. This one-sided application adhesive requires

adhesive to be applied to substrate only, when slopes are less than 1”. Slopes greater than 1” or vertical substrates may require 2-sided application. When the solvent-free adhesive is specified, authorized applicators must review applicable product installation information listed on the appropriate Technical Data Bulletin.

7. **VersiGard (black) QA Seam Tape:** A 3" or 6" wide by 100' long splice tape used for splicing adjoining sections of ECO/CO to ECO/CO membrane and to EPDM membrane.
8. **VersiGard (white) QA Seam Tape:** A 3" or 6” wide by 100' long, cream colored splice tape used with VersiGard (white) Systems.
9. **Versico V-150 EPDM Primer:** A solvent-based primer used to prepare the surface of EPDM or ECO/CO membrane for application of QA Seam Tape. Available in 1 gallon pails.
10. **Low VOC EPDM Primer -** A low VOC (volatile organic compound) primer (less than 250 grams/liter) for use with QA Seam Tape. Available in 1 gallon pails.
11. **CAV-GRIP 3V Low-VOC Adhesive/Primer:** a Low-VOC, methylene chloride-free adhesive that can be used for a variety of applications including: bonding VersiWeld membrane to various surfaces, enhancing the bond between Versico’s VapAir Seal 725TR and various substrates, priming unexposed asphalt prior to applying Flexible DASH Adhesive and for adhering VersiWeld/VersiFlex VersiFleece and VersiGard EPDM or VersiWeld TPO membrane to vertical walls and horizontally, for the field of the roof. Coverage rate is approximately 2,000-2,500 sq. ft. per #40 cylinder and 4,000-5,000 sq. ft. per #85 cylinder as a primer, in a single-sided application; 750 sq. ft. per #40 cylinder and 1,500 sq. ft. per #85 cylinder as an adhesive for vertical walls, in a double-sided application; 1,000 sq. ft. per #40 cylinder and 2,000 sq. ft. per #85 cylinder as an adhesive, horizontally, for the field of the roof, in a double-sided application.
12. **VersiGard Lap Sealant**: A heavy bodied material used to seal the exposed edges of ECO/CO membrane splices. Available in individual tubes.

C. **Membrane (Epichlorohydrin (ECO/CO)**

1. Cured, non-reinforced (black), 60-mil (1.5 mm) thick ECO/CO compounded Hydrin epichlorohydrin elastomer, which conforms to the minimum physical properties as listed below. The membrane is available in maximum 10' (3.05 m) widths and 50' (15.25 m) lengths.

Physical Property	Test Method	SPEC.(Pass)	Typical
Tolerance on Nominal Thickness, %	ASTM D 412	±10	±10
Tensile Strength, min, psi (MPa)	ASTM D 412	1305 (9.0)	1556 (10.7)
Elongation, Ultimate, min, %	ASTM D 412	200	316
Tear Resistance, min, lbf/in (kN/m)	ASTM D 624 (Die C)	150 (26.3)	263 (46.0)
Resistance to Heat Aging* Properties after 168 hours @ 240°F (116°C) Tensile Strength, min, psi (MPa) Elongation, Ultimate, min, %	ASTM D 573 ASTM D 412 ASTM D 412	1305 (9.0) 1400 (9.6) 150	
Ozone Resistance* Condition after exposure to 100 pphm Ozone in air for 168 hours @ 104°F (40°C) Specimen is at 50% strain	ASTM D 1149	No Cracks	No Cracks
Brittleness Temp., max, deg. F (deg. C)*	ASTM D 746	-20 (-29)	-20 (-29)
Water Vapor Permeability* max, perms (.060" thickness)	ASTM E 96 (Proc. B)	0.1	.042
Oil Absorption * Change in mass, max, % after 7 days immersion in diesel fuel #2 at 158°F (70°C)	ASTM D 471	15	13.5

* Not a Quality Control Test due to the time required for the test or the complexity of the test. However, all tests are run on a statistical basis to ensure overall long-term performance of the sheeting.

D. **Splice Procedure**

1. **Remove dirt and excess dust** from the mating surfaces of both sheets by wiping with a clean rag. Clean the dry splice area of both sheets by scrubbing with Weathered Membrane Cleaner until the mating surfaces are solid black in color with no streaking.
2. **Apply Primer to achieve a thin, even coat** on both membrane surfaces with Versico V-150 or Low VOC EPDM Primer. Splice area must be uniform in color, streak-free and free of globs or puddles.

   Note: Permeation-resistant gloves (that meet ANSI/ISEA 105-2005) are recommended when cleaners or primers are being used.

3. **Allow** Primer to dry until tacky but does not transfer to a dry finger touch.
4. **Unroll** approximately 3' of QA Seam Tape. Align release film with marked line and press tape down to bottom sheet using firm, even, hand pressure. Continue for the length of the splice. Tape roll ends must be overlapped 1". Allow top sheet to rest on release film on backside of tape.

   Note: A minimum of 1/8" to a maximum of 1/2" of tape must extend beyond the splice edge.

5. **Pull** release film from QA Seam Tape beneath the top sheet and allow the top sheet to fall freely onto exposed tape.

6. **Roll** the top sheet onto the mating surface and assemble the seam with hand pressure by wiping toward the splice edge. Roll the splice with a 2-inch wide steel roller, using positive pressure toward the outer edge of the splice.
7. **Clean the dry** splice edge with Weathered Membrane Cleaner.
8. **Apply** a 5/16-inch diameter bead of VersiGard Lap Sealant to completely cover the splice edge and feather.

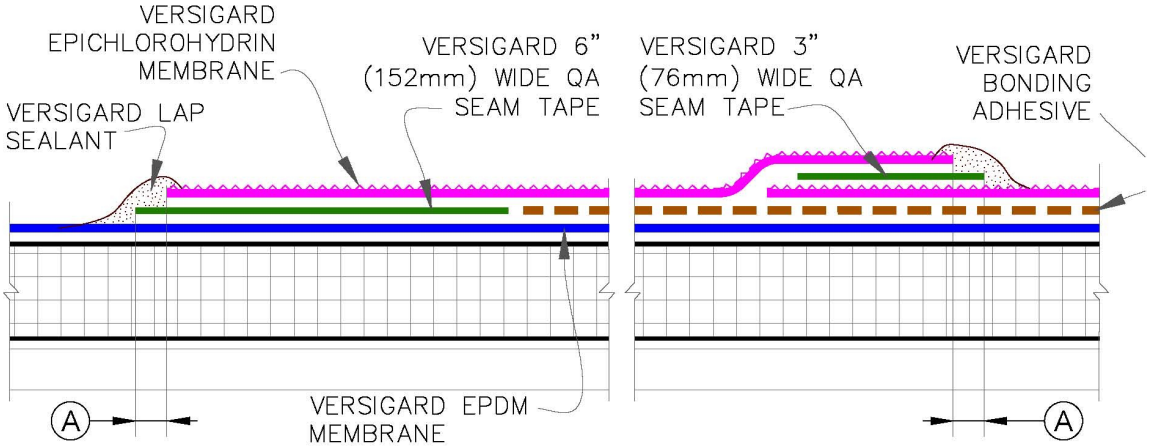

DIMENSION		mm		DIMENSION		mm	
A	1/8"	3	MIN.	A	1/2"	13	MAX.

Copyright 2024 Versico
Versico and VersiGard are Trademarks of Versico

This Spec Supplement represents the applicable information available at the time of its publication. Owners, Specifiers and Versico authorized roofing contractors should consult Versico or their Versico Independent Sales Representative for any information that has subsequently been made available.

Review the appropriate Versico Warranty for specific warranty coverage, terms, conditions and limitations.

SPECIFICATION
SUPPLEMENT

E-02-20

EPDM Membrane Splicing and Splice Repairs
(Including VersiFleece and VersiFleece AC Membrane)

January 2024

The information contained represents guidelines to address possible requirements as part of the building specification as listed under the Quality Assurance or Performance Article. Versico recommends that the building owner retain a design professional to verify that these guidelines are appropriate.

A. **General**

1. **Fully Adhered or Ballasted Roofing Systems**

a. **Projects with 10, 15 and 20 year Warranties – Detail VGC-2.1A**

Side Laps / End Laps: Tape splices must be a minimum of 2-1/2" wide using **3" wide field-applied Quick-Applied Seam Tape OR 3" factory-applied Quick-Applied Seam Tape (QAT)**. (**Detail VGC-2.1A**).

Splice Intersections: 'T'-Joints are to be flashed with a bead of lap sealant and 6"x6" minimum Quick-Applied 'T'-Joint Cover, (for membranes of maximum thickness of 75 mil). (**Detail VGC-2.1A**). **For membranes of thickness of 90 mil**, Apply a second layer of 12"x12" Quick Applied 'T'-Joint Cover centered over 6"x6" or 7"x9" 'T'-Joint Cover. (**Detail U-2A.1– Option 2**).

Note: A minimum 6"x6" section of Quick-Applied Uncured Flashing may be used as a 'T'-Joint cover. Quick-Applied Uncured Flashing is available in rolls of 6", 9" and 12".

b. **Projects with 25 and 30 year warranties – Detail VGC-2.1A**

OPTION 1:

Side Laps / End Laps: Tape splices may be a minimum **3" wide Factory-Applied QA Seam Tape (VersiGard QAT)**. In addition the entire field splice must be overlaid with a continuous 6" wide Quick Applied Overlayment Strip. (See **Detail VGC-2.1A -Option 1**).

Splice Intersections: Overlay the entire field splice with a continuous 6" wide Quick-Applied Overlayment Strip. Apply Lap Sealant at all Intersections between Quick-Applied Overlayment Strip. (See **VGC-2.1A -Option 1**).

OPTION 2:

Side Laps / End Laps: Tape splices may be a minimum of 5-1/2" wide using **6" wide Factory-Applied QA Seam Tape (VersiGard QAT)**. (**Detail VGC-2.1A – Option 2**).

Splice Intersections: 'T'-Joints are to be flashed with a bead of lap sealant and 6"x6" minimum Quick-Applied 'T'-Joint Cover. Apply a second layer of 12"x12" QA 'T'-Joint Cover centered over 6" x 6" QA 'T'-Joint Cover. (**Detail VGC-2.1A – Option 2**).

Note: A minimum 6”x6” section of Quick-Applied Uncured Flashing may be used as a ‘T’-Joint cover. Quick-Applied Uncured Flashing is available in rolls of 6”, 9” and 12”.

2. **VersiGard Reinforced Mechanically Attached Roofing Systems**

a. **Projects with 10, 15 and 20 year Warranties – Detail VGMA-2.1 and VGMA-2.2**

Side Laps: Regardless of Warranty duration, where fastening plates are placed, shall be spliced using **6” wide Factory-Applied QA Seam Tape (VersiGard QAT)** or **6” wide Field-Applied QA Seam Tape**. The splice tape shall be centered over the plates to extend approximately 2” on each side. QA Seam Tape must extend approximately 1/8” beyond the edge of the overlapping membrane. (**Detail VGMA-2.1**).

End Laps: Shall be spliced using a **3” wide QA Seam Tape** resulting in a minimum splice width of 2-1/2” for a maximum of 20 year warranties. (**Detail VGMA-2.2**).

Splice Intersections: ’T’-Joints are to be flashed with a bead of lap sealant and 6”x6” QA ‘T’-Joint Cover. (**Detail VGMA-2.1**).

b. **Projects with 25 and 30 year Warranties – Detail VGMA-2.1A and VGMA-2.2**

Side Laps: Where fastening plates are placed, shall be spliced using **6” wide Factory-Applied QA Seam Tape (QAT) OR 6” wide Field-Applied QA Seam Tape**. The splice tape shall be centered over the plates to extend approximately 2” on each side. QA Seam Tape must extend approximately 1/8” beyond the edge of the overlapping membrane. (**Detail VGMA-2.1A**).

End Laps: Shall be spliced using **6” wide Factory-Applied QA Seam Tape (QAT) OR 6” wide Field-Applied QA Seam Tape** resulting in a minimum splice of 5-1/2” wide for a maximum of 30 year warranties. (**Detail VGMA-2.2**).

Splice Intersections: ’T’-Joints are to be flashed with a bead of lap sealant and 6”x6” QA ‘T’-Joint Cover. Apply a second layer of 12”x12” QA ‘T’-Joint Cover centered over 6”x6” QA ‘T’-Joint Cover. (**Detail VGMA-2.4**)

3. **VersiFleece AC EPDM Mechanically Attached**

a. **Projects with 10, 15 and 20 year Warranties - Detail AC-MA1**

Side Laps, the tape splices may be a minimum of 5-1/2” wide using 6” wide **Field-Applied QA Seam Tape OR 6” Factory-Applied QA Seam Tape (VersiGard QAT)**. (**Detail AC-MA1**).

End Laps: A minimum of 6” wide Quick Applied cured Coverstrip or Quick Applied Overlayment Strip shall be used at all end laps and shall be centered over the leading edge (butt edge) of the splice. (**Detail AC-MA1**).

Splice Intersections: All intersections between the Quick Applied Coverstrip and side laps shall be overlaid by a 6”x6” minimum Quick Applied ‘T’-Joint cover with a bead of Lap Sealant. (**Detail AC-MA1**).

Note: A minimum 6”x6” section of Quick-Applied Uncured Flashing may be used as a ‘T’-Joint cover. Quick-Applied Uncured Flashing is available in rolls of 6”, 9” and 12”.

B. **Splicing Procedures**

1. **Set the Membrane** – Overlap the EPDM membrane a minimum 2 1/2“or 5 1/2” (63 or 138 mm) to coincide with the QA Seam Tape width. Stagger factory seams on dusted EPDM to avoid a double thickness of membrane. For sheets without a pre-printed set mark, place a set mark 1/8” to 1/2” (3-13 mm) beyond the

leading edge of the top membrane when field applying QA Seam Tape. Locate field splices outside of drain sumps. The pre-marked line on the membrane edge can also be used as a guide for positioning splice tape.

Note: Refer to Step 5 for position of membrane with Factory-Applied Tape.

2. **Clean the Splice Area** - The entire membrane surface where QA Seam Tape will be applied must be clean and free of any residual mica dust or dirt. QA Seam Tape will not adhere to dusted or dirty surfaces.

   a. Remove loose mica dust on dusted EPDM by brooming or wiping with a clean, dry rag or HP Splice Wipe. Pay particular attention to removing mica dust at any factory seam step-offs.

   b. Clean the splice areas with Weathered Membrane Cleaner. This allows for roller application of the primer which improves productivity and decreases potential over drying of the primer. This process is required on membrane that has been exposed for a number of weeks. Change HP Splice Wipes often to ensure mica dust is removed. Permeation-resistant gloves meeting ANSI/ISEA 105-2005 are required for hand protection when cleaners or primers are being used. Allow the Weathered Membrane Cleaner to flash-off before applying primer.

   CAUTION: Using rags or Splice Wipes that are saturated with mica dust only serve to move the dust from one area to another.

3. **Apply HP-250 or Low-VOC Primer**

   a. **Dusted Membrane** - After removing the loose mica as noted above, Roller-apply the primer to the membrane with a 3/8" (9mm) medium nap paint roller achieving a thin and even coat that is uniform in color and free of streaks or heavy spots. Confirm that primer is applied into any factory seam step-offs.

   b. **Pre-Kleened™ Membrane or membrane cleaned with Weathered Membrane Cleaner** - Roller-apply the primer to the membrane with a 3/8" (9mm) medium nap paint roller achieving a thin and even coat that is uniform in color and free of streaks or heavy spots. Confirm that primer is applied into any factory seam step-offs.

   c. Allow the primer to flash-off until it does not transfer to a dry finger touch. Do not allow the primer to over dry.

   d. Install QA Seam Tape shortly after the primer flashes off to maximize bond strength and minimize potential dust contamination.

      CAUTION: Due to solvent flash-off, condensation may form on freshly applied primer when the ambient temperature is near the dew point. If condensation develops, the application of primer and QA Seam Tape must be discontinued since proper adhesion will not be achieved. Allow the primer surface to dry and apply a thin freshener coat of primer to the previously coated surface and apply QA Seam Tape when conditions allow. Do not stir LVOC Primer.

4. **Field Applied QA Seam Tape**

   a. **Unroll** approximately 3' (1m) of QA Seam Tape aligning the tape with the set marks. Use firm and even hand pressure to press the tape down to the bottom sheet along the length of the splice. Overlap tape roll ends 1". A continuous piece of QA Seam Tape must be used at all factory seams and field splice intersections. In warm, sunny weather, keep QA Seam Tape rolls in their box in a shaded area until ready to use.

   b. Rolling the installed QA Seam Tape with a 2"-wide hand roller will reduce the frequency of air blisters in the completed field seam. Crease the QA Seam Tape into any factory seam step-off with the edge of the hand roller.

   c. Allow the top sheet to fall freely onto the poly backing. Ensure that a minimum of 1⁄8" to a maximum of 1/2" of tape extends beyond the top membrane edge. Trim membrane if necessary.

d. Pull the poly backing off at a 45 degree angle and use firm hand pressure across the splice towards the outside splice edge mating the top sheet onto the QA Seam Tape.

e. Immediately roll across the splice with a 2" (50 mm) wide hand roller applying positive pressure. Use the edge of the hand roller to crease the top membrane into any factory seam step-off.

Note: At any QA Seam Tape overlap, apply a 5⁄16" (8 mm) diameter bead of Lap Sealant 1/2" (12 mm) in all directions from the overlap.

5. **Factory Applied QA Seam Tape (VersiGard QAT)**

a. Overlap the Factory Applied Tape membrane a minimum 3" or 6" (75 or 150 mm) to coincide with the QA Seam Tape width. Stagger factory seams on dusted EPDM to avoid a double thickness of membrane.

b. Pull the poly backing off at a 45 degree angle and use firm hand pressure across the splice towards the outside splice edge mating the top sheet onto the primed area of the bottom sheet.

c. Immediately roll across the splice with a 2" (50 mm) wide hand roller applying positive pressure. Use the edge of the hand roller to crease the top membrane into any factory seam step-off.

6. **Install T-Joint Covers** - At all field splice intersections, follow the cleaning and priming steps listed above and then apply a 5⁄16" diameter (8 mm) bead of Lap Sealant 1/2" (12 mm) in each direction from the membrane intersection according to **Detail VGC-2.1A**. Then install a 6" x 6" Qucik Applied T-Joint Cover. For 25 and 30 year warranties and all 90-mil membranes apply a 12" x 12" Quick Applied T-Joint Cover centered over the 6" x 6" QA T-Joint Cover according to **Detail VGC-2.2**.

7. **Apply Lap Sealant** - Apply Lap Sealant at cut edges of reinforced membrane, splice tape overlaps and Quick Applied T-Joint Covers. Lap Sealant may be applied immediately following the completion of a splice. Feather the Lap Sealant with the specially formed plastic Lap Sealant Tool so the high point or crown is centered over the splice edge. Plastic Lap Sealant Tools are provided in cartons of Quick Applied Uncured EPDM Flashing and cardboard tools are on the top of the Lap Sealant cartons.

8. **Cold Weather Requirements –** installation when temperatures fall below 40°F (4°C)

a. Hot boxes for jobsite storage must be provided to maintain a minimum QA Seam Tape temperature of 40°F (4°C).

b. Heat the primed area of the bottom membrane as the QA Seam Tape or Factory Applied QA Seam Tape (VersiGard QAT) is installed and pressed into place.

c. Field applied QA Seam Tape must be rolled with a 2" (50 mm) wide hand roller prior to removal of the release liner when temperatures fall below 40°F (4°C).

d. Prior to rolling the splice area with a 2" (50 mm) wide hand roller, apply heat to the topside of the membrane with a hot-air gun. The heated surface should be warm to the touch.

C. **Lap Sealant Application**

1. **Lap Sealant is required at the following locations:**

a. Splice tape overlaps.

b. Beneath 6" x 6" T-Joint Covers and around the outer edge.

c. Where joints in metal edgings intersect with VersiGard Quick Applied Cured Cover Strip.

d. Around all edges of Quick Applied Uncured Flashing, Corners, and Pockets.

e. Cut edges of reinforced membrane.

2. **Procedures**

a. Dusted EPDM must be cleaned 1” (25 mm) on either side of the splice edge using Weathered Membrane Cleaner or EPDM Primer and HP Splice Wipes or a clean cloth.

Note: Weathered Membrane Cleaner is not required when using Kleen EPDM unless accumulated dirt is present.

b. Apply a 5/16” bead of Lap Sealant centered over the splice edge. Coverage rate is 22 lineal feet per tube.

c. Feather the Lap Sealant with the specially formed Lap Seal Tool so the high point or crown is centered over the splice edge. Clean the feathering tool occasionally for consistent crowning of Lap Sealant.

d. Application of Lap Sealant **should be completed each day** to avoid extra cleaning of accumulated dirt.

D. **Splice Repairs**

1. **General**

a. Prior to initiating repairs, the membrane must be cleaned to remove field dirt and other contaminants. Using a scrub brush, scrub the splice areas with warm water and a low-sudsing soap (Spic and Span, Tide, Lestoil). Rinse with clean water and allow to dry prior to applying Weathered Membrane Cleaner or Versico EPDM Primer as required.

b. Versico’s Weathered Membrane Cleaner can be used to prepare membrane exposed to the weather prior to applying Versico EPDM Primer. Using a HP Splice Wipe or natural fiber rag (cotton) with Weathered Membrane Cleaner, scrub the area in a circular motion. Continue cleaning until the surface is a consistent matte black color without streaking.

2. **Repairs of Cuts and Tears (Surface Splice)**

Repairs to cuts and tears in the membrane must be accomplished by splicing a membrane section over the affected area.

a. Select a repair membrane, which is the same material as that to be repaired.

b. Extend the repair membrane section at least 3" in every direction from the cut or tear. Round the corners of the repair membrane prior to splicing. Clean the membrane to remove field dirt and other contaminants as outlined above.

c. Apply Versico EPDM Primer to the splice areas. Install Quick Applied Cured Cover Strip or Cured Membrane and QA Seam Tape and then hand roll the splice areas. Apply T-Joint Covers at splice intersections. Lap Sealant is applied at flashing and tape overlaps in accordance with standard procedures.

3. **Repair of improperly installed Tape Splices**

a. Improperly installed tape splices include, but are not limited to, fishmouths at field splices, lack of or improper use of Primer, condensation formation on Primer or incorrect tape placement, etc.

b. **If fishmouths are present in the field splice**, the fishmouth must be cut by removing the top layer of membrane prior to overlaying the splice. The flashing overlay **must** be supported by the bottom layer of cured membrane

c. Clean the splice area with Weathered Membrane Cleaner. Apply EPDM Primer on both sides extending past the width of the new flashing overlay to be installed.

d. Overlay the defective splice area with a bead of lap sealant overlaid with a minimum 6" wide VersiGard Quick Applied Uncured EPDM Flashing, Cover Strip or Overlayment Strip centered over the edge of the splice. If using Quick Applied Uncured EPDM Flashing, apply Lap Sealant around the outer edge and feather accordingly.

Copyright 2024 Versico

Versico, VersiGard, VersiWeld, VersiFlex and VersiFleece, are Trademarks of Versico

This specification represents the applicable information available at the time of its publication. Owners, specifiers and Versico authorized roofing contractors should consult Versico or their Versico Independent Sales Representative for any information, which has subsequently been made available.

Review the appropriate Versico warranty for specific warranty coverage, terms, conditions and limitations.

DESIGN REFERENCES

Table of Contents

January 2024

The information contained in this generic specification represents a part of Versico's requirements for obtaining a roofing system warranty. Construction materials and practices, building siting and operation, climatic conditions, and other site-specific factors will have an impact on the performance of the roofing systems. Versico recommends that the building owner retain a design professional to determine appropriate design measures to be taken in order to address these factors.

Construction Generated Moisture…….. DR-01-21

FM 1-28 Summary Update…….. DR-02-21

FM 1-29 Summary Update – Adhered Roofing Systems…….. DR-03-21

FM 1-29 Summary Update – Mechanically Fastened Roofing Systems…….. DR-04-21

Insulation Fastening Patterns…….. DR-05-23

Withdrawal Resistance Criteria…… DR-06-19

CRRC/LEED Information……...DR-07-23

Wood Nailers and Securement Criteria…….. DR-08-11

Considerations for Hail Design……DR-09-20

Metal Edging……DR-12-18

VERSICO ROOFING SYSTEMS

DESIGN REFERENCES

DR-01-21

Construction Generated Moisture

January 2024

The information contained in this supplement serves as criteria for Specifiers and Authorized Contractors regarding the design and installation of Versico Roofing Systems and related products. Additional information essential for the design and installation of the Roof Systems mentioned herein are also included in the respective Specification for each Roof System and in the Design Reference Section of the Versico Technical Manual. Specifiers and Authorized Contractors are advised to reference all applicable sections.

While buildings should ultimately be designed to fit their intended purpose and accommodate their occupants, they must also tolerate various construction conditions (i.e., time of construction, material and process used).

In cold climatic regions, buildings in their construction phase will most likely experience an aggressive upward moisture drive as a result of hydration of freshly poured concrete floors and the practice of using oil or propane fired heaters.

According to National Roofing Contractors Association (NRCA):

1. Construction processes can release large quantities of water vapor. For example, wall or ceiling plaster or 4" thick concrete slabs release roughly one quart of water (2 pounds) for each square foot of surface area during the drying process. A building that is 120,000 square feet in size could experience up to 30,000 gallons of construction-generated moisture.

2. The combustion process of an oil-or propane-fired heater, used for temporary heat during construction, produces more water as a by-product of burning than the weight of the fuel consumed. Approximately one gallon of water will be produced for each gallon of heating oil burned. This generated moisture, if not addressed through ventilation or contained using vapor retarders, will subject the roof assembly to potential harmful effects that vary from mold accumulation to reduced insulation efficiency.

Moisture Migration

Moisture vapor penetrates a roof assembly either by air leakage or by diffusion.

1. Air leakage occurs through joints in the metal deck or tilt-up panels, insulation and joints and gaps around penetrations. Air leakage will also occur as a result of imperfections, such as punctures and tears Air leakage can allow the transport of significantly greater amounts of moisture than can be transported by way of diffusion.

2. Diffusion of moisture is caused by the differences in vapor pressure that occur with varying temperature conditions and relative humidity. The greater the temperature differential, the more active the moisture drive.

Air Infiltration

Humid internal air migrating upward through these joints and gaps could cause condensation. If the condensation occurs beneath the roofing membrane it could freeze, in colder temperatures (frozen moisture makes a crackling noise when walked on in winter). If the condensation occurs in the layers of insulation it could eventually weaken the bottom insulation facer which would compromise the wind performance. When a continuous vapor barrier is not to be used, infiltration of humid air, can be prevented by sealing joints and gaps. To achieve an air-tight seal, all gaps may be sealed as illustrated. In addition, vertical joints in pre-cast tilt-up panels and construction gaps resulting at inside and outside corners must be completely sealed to eliminate interior air from reaching the roofing assembly.

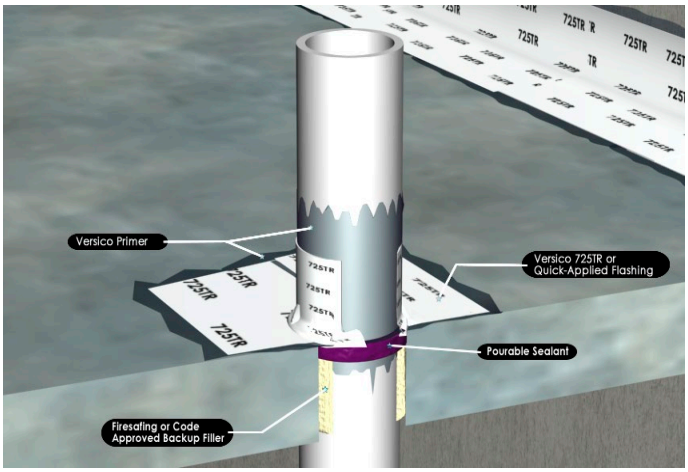

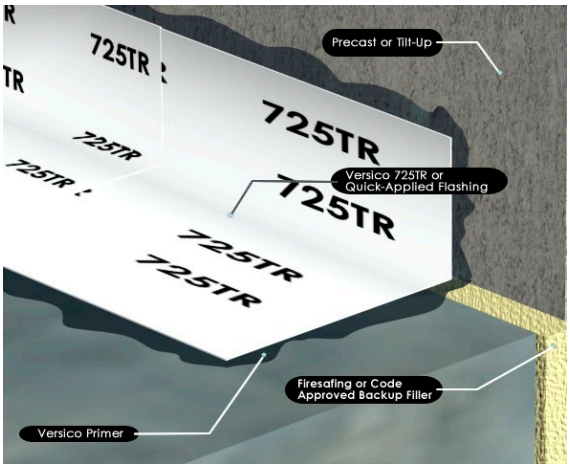

Gaps must be filled with firesafing or building code approved backup filler.

Versico's VapAir Seal 725 TR or Quick-Applied Flashing can be used as shown in illustrations after priming the substrate. For the VapAir Seal 725 TR, use as a substrate primer Versico's CAV-GRIP 3V, CCW 702, CCW 702-LV or CCW 702WB, and for the VersiGard® Quick-Applied Flashing, use Versico's EPDM Primer.

Projects with Steel decks, deck-to-wall junctions may be sealed using the Verscio's VapAir Seal MD directly to the steel deck, without the use of a primer.

Preventing Moisture Damage

While occupancy generated moisture is usually addressed using a vapor retarder, construction generated moisture can be addressed by:

1. Reducing accumulated construction moisture

2. Sealing gaps between the structural deck and walls as well as gaps around penetrations (utilizing VapAir Seal Flashing Foam or VapAir Seal MD) and at the steel deck end laps (utilizing VapAir Seal MD).

3. Using of multiple layers of insulation can also provide an additional barrier, in the event of air infiltration and reduces the level of moisture concentration within the roofing assembly.

   Note: Studies have also revealed an 8 - 10 % reduction in energy costs between assemblies with equal R-Value when designed with multiple layers versus those designed with a single layer of insulation.

4. Construction generated moisture can also be reduced by project dehumidification prior to building occupancy.

Copyright 2024 Versico

Versico, VersiGard, VapAir Seal and VersiFleece are Trademarks of Versico

This Spec Supplement represents the applicable information available at the time of its publication. Owners, Specifiers and Versico authorized roofing contractors should consult Versico or their Versico Independent Sales Representative for any information that has subsequently been made available.

Review the appropriate Versico Warranty for specific warranty coverage, terms, conditions and limitations.

DESIGN REFERENCES

DR-02-21

FM 1-28 Summary Update

January 2024

This Design Reference document offers a summary of updates to the FM 1-28 Property Loss Prevention Data Sheet announced by FM Global in February 2020.

Specifiers, Applicators or Building owners must access the FM website for other related information and contact the local FM office when working on a FM insured property. Enhancements mandated by FM Global for an FM insured property are not necessarily part of Versico's requirements for the issuance of the Versico warranty. When an inspection is performed by Versico, it is not to verify compliance with the FM requirements but to ensure Versico's minimum warranty requirements have been met.

FM 1-28 Recent Update

One key update relates to roof zone dimensions to align with the ASCE 7-16 Design Standards. In some cases (depending on the roof dimensions, building height, and roof slopes), four zones may exist: interior, inner perimeter (also referred to as field), outer perimeter, and corner zones. The Roof Zone table below may be referenced for more detailed information.

Roof Height / Slope	Reference	Corner Zone (Zone 3)	Outer Perimeter Zone (Zone 2)	Inner Perimeter / Field Zone (Zone 1)	Interior Zone (Zone 1')
Building slopes less than 1- 1/2" (7˚ or less) OR Buildings less than 90' with height to width ratio of 1.0 or less	Figure I	0.6h x 0.6 x 0.2h "L" shaped	0.6h from roof edge	1.2h from roof edge	Covers the remaining roof area
Building slopes 1-1/2" or greater (greater than 7˚)	Figure II	The width (a) of the various perimeter and corner zones equals the lesser of 10% of the building width or 0.4h, but not less than 4% of the width or 3ft.		Covers the remaining roof area	N/A
Buildings 90'-high or taller, or buildings higher than 60' with height to width ratio greater than or equal to 1.0	Figure III	The depth of the corner and perimeter zones shall equal 10% of the building width dimension, but not less than 3ft (0.9m). The corner zone shall extend along both perimeters a distance equal to twice the depth forming an "L" pattern.		Covers the remaining roof area	N/A

Note: h = building height

VERSICO ROOFING SYSTEMS

Other important items to note include:

1- Revised design wind guidance reflects changes in pressure coefficients (GC_P).

2- The basic design wind speed maps for the continental United States and Alaska remain unchanged and are still based on ASCE 7-05.

3- Wind pressure tables have been removed. Roof pressures can be determined by using either the RoofNav Ratings Calculator or the pressure calculations in section 3.0 of 1-28. Also, pressure coefficients have been provided as outlined in the tables included with Figure I, Figure II, and Figure III.

4- A separate 100-year MRI wind map has been provided for each of the islands of Hawaii, instead of using one wind speed for all the islands.

Figure I

Building slopes less than 1-1/2" (7° or less)

OR

Buildings less than 90' with height to width ratio of 1.0 or less

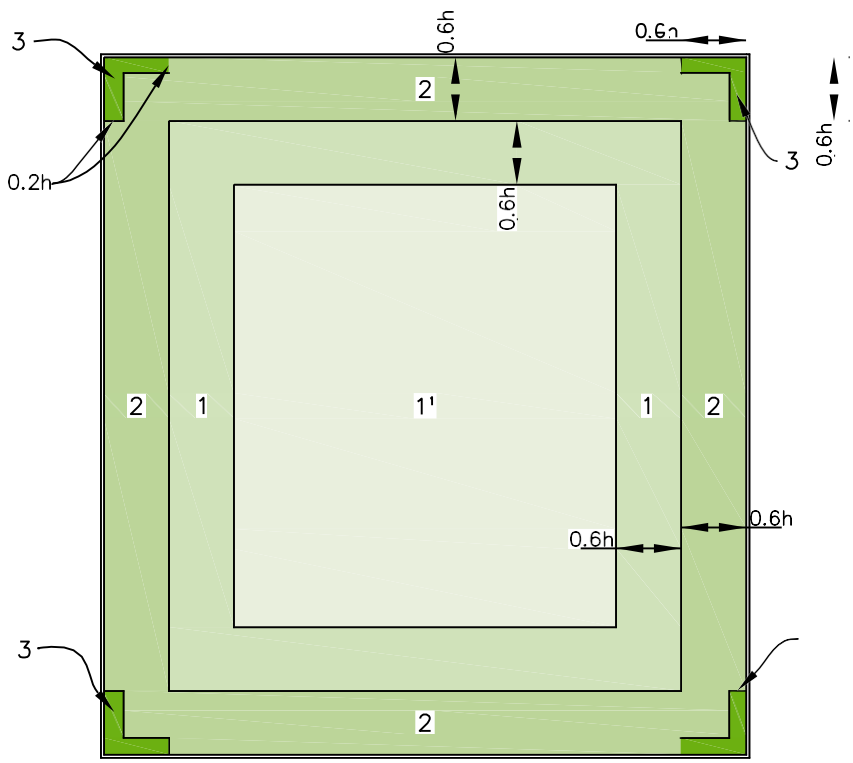

Zone	GCP
Corner Zone (3)	-3.2
Outer Perimeter Zone (2)	-2.3
Inner Perimeter / Field Zone (1)	-1.7
Interior Zone (1')	-0.9

Figure II

Building slopes 1-1/2" or greater (greater than 7°)

Note: a = the width of the various perimeter and corner zones equals the lesser of 10% of the building width or 0.4h, but not less than 4% of the width or 3' (0.9 m).

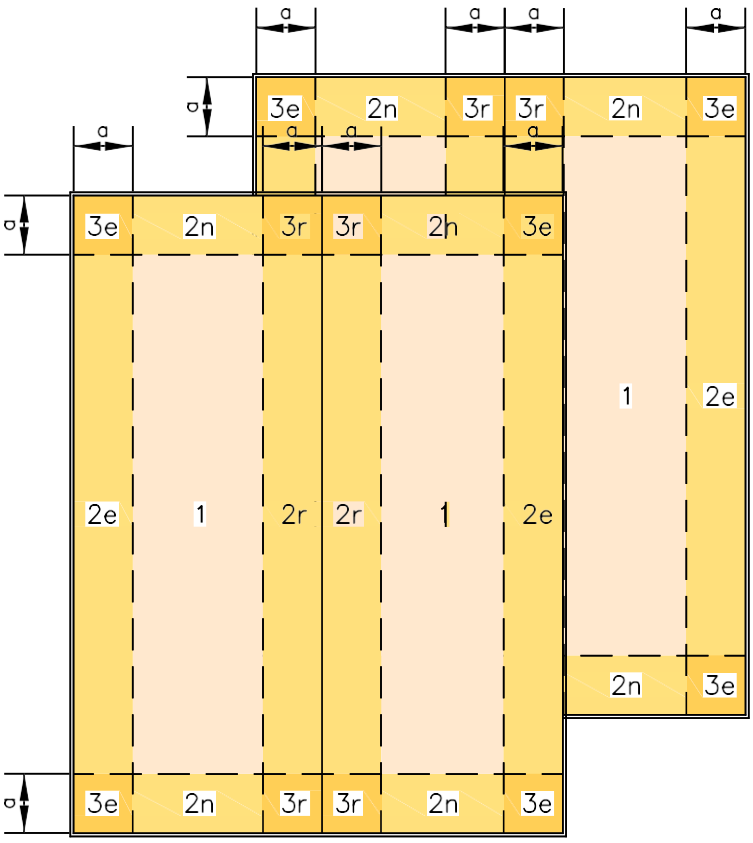

Zone	GC_P
Corner Zone (3r)	-3.6
Outer Perimeter Zone (2n, 2r, 3e)	-3
Inner Perimeter / Field Zone (1, 2e)	-2

This table contains conservative GC_P values for slopes 1-1/2" or greater. For lesser values for steeper slopes, refer to FM 1-28 table 3.2.2d or table 3.2.2c.

Figure III

Buildings 90’ high or taller, or buildings higher than 60’ with height to width ratio greater than or equal to 1.0

Note: a = 10% of the lesser horizontal dimension, but not less than 3’ (0.9m).

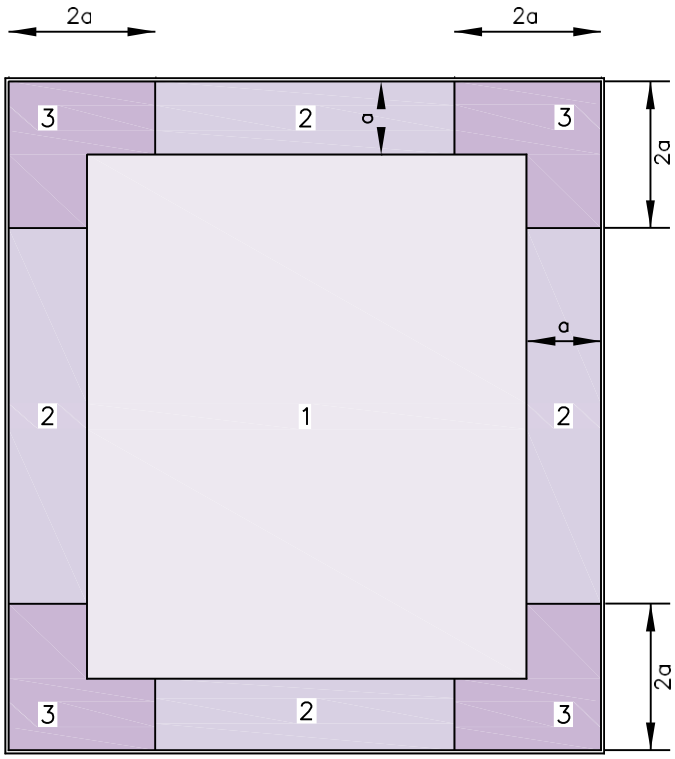

Zone	GCp
Corner Zone (3)	-3.2
Outer Perimeter Zone (2)	-2.3
Inner Perimeter/Field Zone (1)	-1.7

This document is intended for informational reference only and shall not be considered a replacement to the actual FM 1-28 publication. All FM-insured projects must be reviewed by the local FM Engineering office before beginning any roofing work.

Additional information may be obtained by logging on to https://www.roofnav.com to access the RoofNav number search, RoofNav Ratings Calculator, and all applicable Property Loss Prevention Data Sheets.

Copyright 2024 Versico

Versico is a Trademark of Versico

This specification represents the applicable information available at the time of its publication. Owners, specifiers and Versico authorized roofing contractors should consult Versico or their Versico Independent Sales Representative for any information, which has subsequently been made available.

Review the appropriate Versico warranty for specific warranty coverage, terms, conditions and limitations.

DESIGN REFERENCES

DR-03-21

FM 1-29 Summary Update
Adhered Roofing Systems

January 2024

This Design Reference document offers a summary of updates to the FM 1-29 Property Loss Prevention Data Sheet for adhered roofing systems announced by FM Global in February 2020.

Specifiers, Applicators or Building owners must access the FM website for other related information and contact the local FM office when working on a FM insured property. Enhancements mandated by FM Global for an FM insured property are not necessarily part of Versico's requirements for the issuance of the Versico warranty. When an inspection is performed by Versico, it is not to verify compliance with the FM requirements but to ensure Versico's minimum warranty requirements have been met.

A summary of the changes made to the FM 1-29 document that affect adhered roofing systems include the following:

New designations for field, perimeter and corner areas. Now referred to as Zones 1, 2 and 3, respectively.
Addition of a new secondary interior field area, designated as Zone 1' ("Zone 1 Prime").
Modified perimeter and corner prescriptive insulation attachment enhancements for adhered roofing systems utilizing ribbon adhesive. (Mechanically attached insulation enhancements have not changed).

This Design Reference will focus on the February 2020 FM 1-29 prescriptive enhancement requirements for insulation attachment using mechanical fasteners and ribbons of adhesive on adhered roofing systems.

Prescriptive Enhancements – Adhered Systems

Prescriptive enhancements for Zones 2 and 3 of a building are acceptable when either of the following conditions are met.

- The FM Zone 1 rating in any location does not exceed 1-90, **OR**
- The building is located in a non-tropical cyclone-prone region and the Zone 1 rating does not exceed 1-105.

Buildings that do not meet these criteria must use a roofing system with a FM approved wind uplift rating that meets or exceeds the design rating for each Zone (Zones 1', 1, 2, and 3).

VERSICO ROOFING SYSTEMS

Adhered Systems Using Mechanical Fasteners

The method for prescriptively enhancing adhered systems that utilize mechanically fastened insulation has not changed. The attachment requirements are as follows:

- Zone 2 - 50% increase over Zone 1 but no less than 1 fastener/plate per 2 ft² (16 per 4'x8' board).
- Zone 3 - 1 fastener/plate per 1 ft² (32 per 4'x8' board).

Mechanically Fastened Insulation Example

A roofing assembly specified for use in a non-tropical cyclone-prone region achieves a 1-105 wind uplift rating using 1 fastener/plate per 2 sq. ft. (16 per 4'x8' board). The enhanced Zone fastening would be as detailed in the following table.

1-105 Rated Adhered Assembly – Fastened Insulation			
Zone 1' Fastening	**Zone 1 Fastening (Tested)**	**Zone 2 Fastening (50% increase of Zone 1)**	**Zone 3 Fastening**
Use Zone 1 or alternate system meeting Zone 1' rating requirements	16 fasteners per 4'x8' board	24 fasteners per 4'x8' board	32 fasteners per 4'x8' board

The plan view fastening for this example would appear as shown below. Zone 1' is not shown.

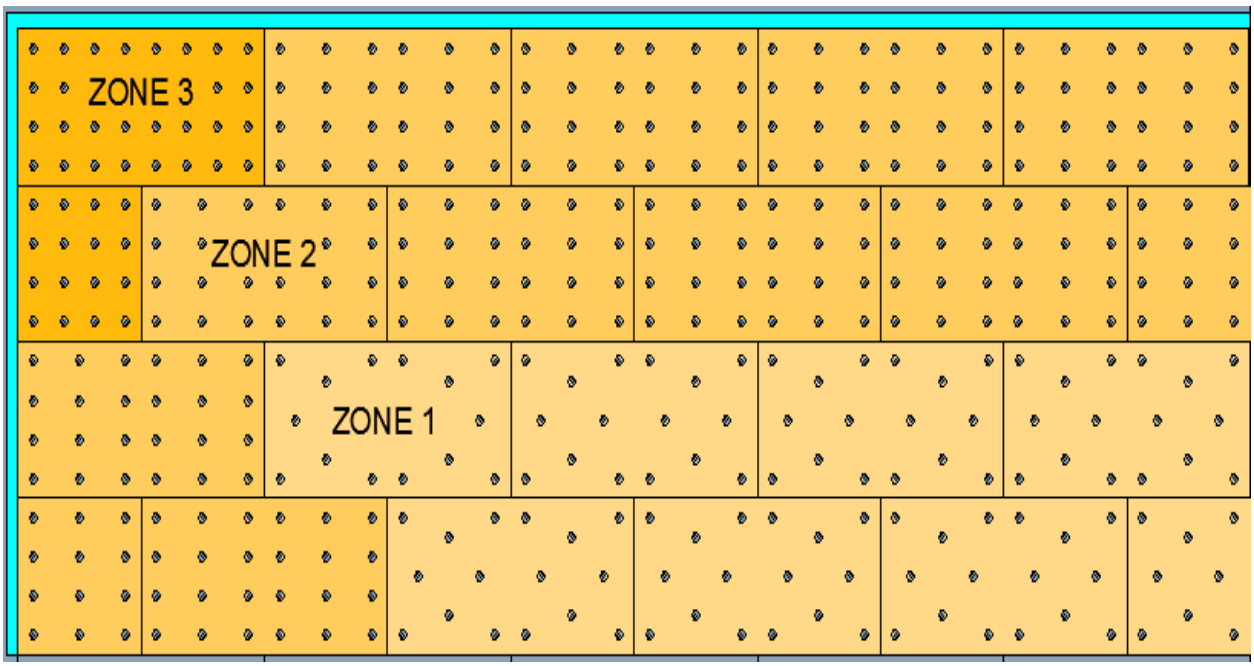

Adhered Systems Using Ribbon Applied Adhesives

The method for prescriptively enhancing insulation attachment with ribbon applied adhesive on adhered systems has changed. The Zone 2 reduction in spacing between ribbons has changed from 60% (previously allowed) to 67% of the tested Zone 1 spacing. Likewise, the Zone 3 reduction of spacing between ribbons has changed from 40% to 50% of the Zone 1 spacing.

Ribbon Attached Insulation Example

A roofing assembly specified for use in a non-tropical cyclone-prone region achieves a 1-105 wind uplift rating using ribbons of adhesive spaced 12" o.c. The enhanced Zone ribbon spacing would be as detailed in the following table.

1-105 Rated Adhered Assembly – Adhesive Ribbons			
Zone 1′ Spacing	**Zone 1 Spacing (Tested)**	**Zone 2 Spacing (67% of Zone 1)**	**Zone 3 Spacing (50% of Zone 1)**
Use Zone 1 or alternate system meeting Zone 1′ rating requirements	12" o.c. Max.	8" o.c. Max.	6" o.c. Max.

The plan view ribbon spacing for this example would appear as shown below. Zone 1' is not shown.

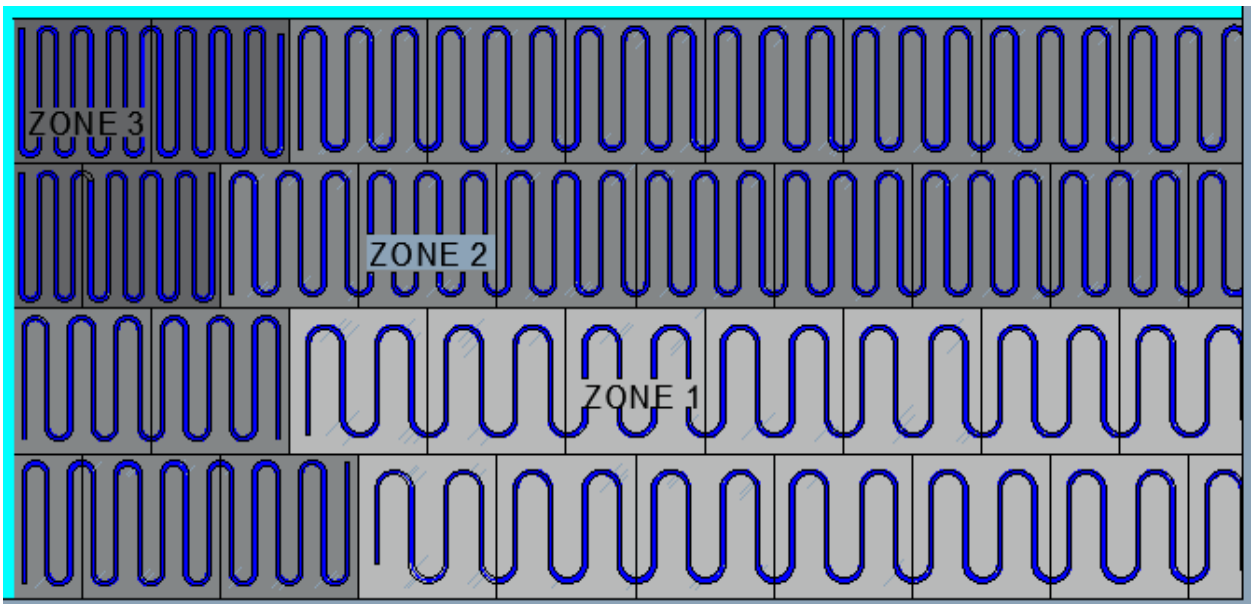

Non-Prescriptive Enhancements

The option is always available to provide a roofing system that has been tested to achieve the uplift pressure requirement / FM rating for each roof Zone. As such, a system that meets the Zone 3 requirements may be installed over the entire roof, or multiple systems may be installed to meet the individual Zone 1', 1, 2 and 3 design pressures.

This document is intended for informational reference only and shall not be considered a replacement to the actual FM 1-29 publication. All FM-insured projects must be reviewed by the local FM Engineering office before beginning any roofing work.

Additional information can be obtained by logging on to https://www.roofnav.com to access the RoofNav number search, RoofNav Ratings Calculator, and all applicable Property Loss Prevention Data Sheets.

Copyright 2024 Versico

Versico is a Trademark of Versico

This specification represents the applicable information available at the time of its publication. Owners, specifiers and Versico authorized roofing contractors should consult Versico or their Versico Independent Sales Representative for any information, which has subsequently been made available.

Review the appropriate Versico warranty for specific warranty coverage, terms, conditions and limitations.

DESIGN REFERENCES

DR-04-21

FM 1-29 Summary Update
Mechanically Attached Roofing Systems

January 2024

This Design Reference document offers a summary of updates to the FM 1-29 Property Loss Prevention Data Sheet for adhered roofing systems announced by FM Global in February 2020.

Specifiers, Applicators or Building owners must access the FM website for other related information and contact the local FM office when working on a FM insured property. Enhancements mandated by FM Global for an FM insured property are not necessarily part of Versico's requirements for the issuance of the Versico warranty. When an inspection is performed by Versico, it is not to verify compliance with the FM requirements but to ensure Versico's minimum warranty requirements have been met.

An updated version of the FM 1-29 Property Loss Prevention Data Sheet was published in February 2020. Changes made to that document that affect mechanically fastened roofing systems include the following:

New designations for field, perimeter and corner areas. Now referred to as Zones 1, 2 and 3, respectively.
Addition of a new secondary interior field area designated as Zone 1' ("Zone 1 Prime").
Addition of a calculated, performance-based attachment enhancement method for Zones 2 and 3.
Modified prescriptive enhancement attachment requirements for Zones 2 and 3.

This Design Reference will focus on the 2020 FM 1-29 performance-based and prescriptive enhancement requirements for membrane attachment on mechanically fastened roofing systems. This includes linear induction-welded systems.

Performance-Based Enhancement

FM has added an option into 1-29 for the performance-based enhancement of Zones 2 and 3 for mechanically fastened membrane systems. The determination is based on the membrane width and the fastener spacing of the tested assembly chosen for Zone 1. The following example is offered for clarification.

VERSICO ROOFING SYSTEMS

Performance-Based Enhancement Option Example

The FM RoofNav Ratings Calculator was used to determine that an example building requires the following wind uplift ratings:

Zone 1'	Zone 1	Zone 2	Zone 3
90 psf (1-90)	120 psf (1-120)	150 psf (1-150)	210 psf (1-210)

Choose a roofing system that has been tested to meet or exceed the **Zone 1 rating** which for this example is a 12' wide membrane fastened 6" oc. The Zone 1' pressure is less than Zone 1 so the as-tested assembly can be used in Zone 1'. However, since the Zone 2 and Zone 3 pressures exceed the tested Zone 1 pressure (120 psf), the membrane width must be reduced (to increase the membrane fastening density) in these areas while maintaining the 6" oc fastener spacing. The calculations for Zones 2 and 3 are as follows.

Step 1: Determine the area of membrane secured by a single fastener for Zone 1:

- Fastener row spacing *times* the fastener spacing along the row;
  - 11.5 ft (12' sheet minus seam overlap) x 0.5 ft (6" oc fastener spacing) = 5.75 ft^2 (per fastener securement area)

Zone 2 Enhancement

Step 2: Determine the needed reduction in the area of membrane secured by a single fastener for Zone 2:

- Zone 1 tested pressure *times* fastener securement area *divided by* Zone 2 pressure;
  - 120 psf x 5.75 ft^2 / 150 psf = 4.6 ft^2 per fastener

Step 3: Determine the reduction in fastener row spacing for Zone 2:

- Zone 2 area of membrane secured by a single fastener *divided by* fastener spacing;
  - 4.6 ft^2 / 0.5 ft = 9.2 ft maximum row spacing with fasteners spaced 6" oc

Zone 3 Enhancement

Step 4: Determine the needed reduction in the area of membrane secured by a single fastener for Zone 3:

- Zone 1 tested pressure *times* fastener securement area *divided by* Zone 3 pressure;
  - 120 psf x 5.75 ft^2 / 210 psf = 3.3 ft^2 per fastener

Step 5: Determine the reduction in fastener row spacing for Zone 3:

- Zone 3 area of membrane secured by a single fastener *divided by* fastener spacing;
  - 3.3 ft^2 / 0.5 ft = 6.6 ft maximum row spacing with fasteners spaced 6" oc

The following table summarizes the performance-based example results calculated above.

Performance-Based Example Summary

Zone 1'	Zone 1 – Tested	Zone 2	Zone 3
Use Zone 1 or system passing 1-90	12' Sheets 11.5' Row Spacing 6" oc Fastener Spacing	9.2' Row Spacing 6" oc Fastener Spacing	6.6' Row Spacing 6" oc Fastener Spacing

Prescriptive Enhancement Option

The FM prescriptive enhancement option has always been available for mechanically fastened systems and is a simple way to determine the reduction in membrane sheet width / fastener row-to-row spacing for Zones 2 and 3. This method, like the performance-based method, is based on the testing results for Zone 1. The following table contains a summary of the prescriptive enhancement requirements.

Zone 1'	Zone 1 – Tested	Zone 2	Zone 3
Use Zone 1 or separately tested system	Tested Spacing	67% of Zone 1 Fastener Row-To-Row Spacing (60% previously)	50% of Zone 1 Fastener Row-To-Row Spacing (40% previously)

Prescriptive Enhancement Option Example

A FM Approved roofing system requires the use of a 12' wide membrane (11.5' oc fastener row spacing) with fasteners spaced 6" oc along the row. The following table identifies the prescriptive enhancement requirements.

Zone 1'	Zone 1 – Tested	Zone 2 (67%)	Zone 3 (50%)
Use Zone 1 or separately tested system	12' Sheets 11.5' Row Spacing 6" oc Fastener Spacing	7.7' Row Spacing 6" oc Fastener Spacing	5.75' Row Spacing 6" oc Fastener Spacing

In summary, either the performance-based enhancement or the prescriptive enhancement option can be used to comply with the FM 1-29 2020 update. Please refer to the FM Global publications for all the applicable requirements.

This document is intended for informational reference only and shall not be considered a replacement to the actual FM 1-29 publication. All FM-insured projects must be reviewed by the local FM Engineering office before beginning any roofing work.

Additional information can be obtained by logging on to https://www.roofnav.com to access the RoofNav number search, RoofNav Ratings Calculator, and all applicable Property Loss Prevention Data Sheets.

Copyright 2024 Versico

Versico is a Trademark of Versico

This specification represents the applicable information available at the time of its publication. Owners, specifiers and Versico authorized roofing contractors should consult Versico or their Versico Independent Sales Representative for any information, which has subsequently been made available.

Review the appropriate Versico warranty for specific warranty coverage, terms, conditions and limitations.

DESIGN REFERENCES

DR-05-23

Insulation Fastening Patterns

January 2024

The information contained represents guidelines to address possible requirements as part of the building specification as listed under the Quality Insurance or Performance Article. Versico recommends that the building owner retain a design professional to verify that these guidelines are appropriate.

When enhanced insulation fastening is required as prescribed in Factory Mutual Loss Prevention Data Sheet 1-29, ANSI/SPRI WD-1, or Miami-Dade County, the specifier may consider the enclosed insulation pattern securements. **NOTE: All insulation and underlayments shown are the minimum thickness required for the established rating.**

Insulation Patterns for boards 4’ x 4’ in size

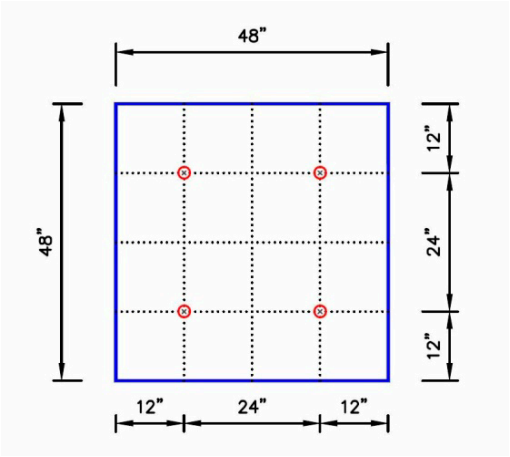

4 Insulation Fasteners & Plates

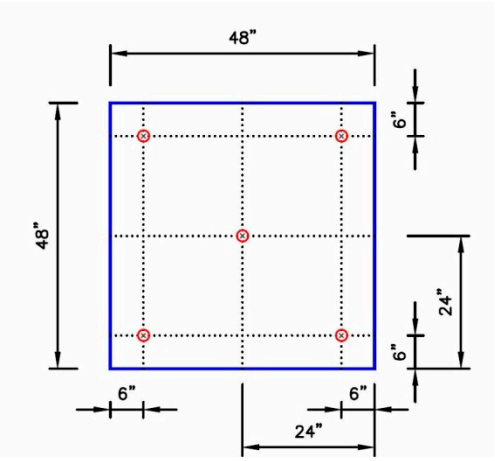

5 Insulation Fasteners & Plates

Only FM 1-90 for:

2” Polyiso MP-H/Versicore or SecurShield

1/2” SecurShield HD Plus

5/8” Dens Deck Prime, DensDeck StormX Prime or Securock

Only FM 1-90 for:

1/2” Securock

1-1/2” Polyiso MP-H/Versicore (base layer fastened only)

VERSICO ROOFING SYSTEMS

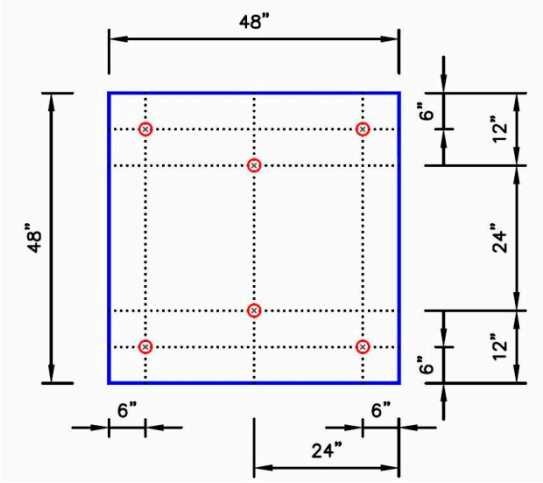

6 Insulation Fasteners & Plates

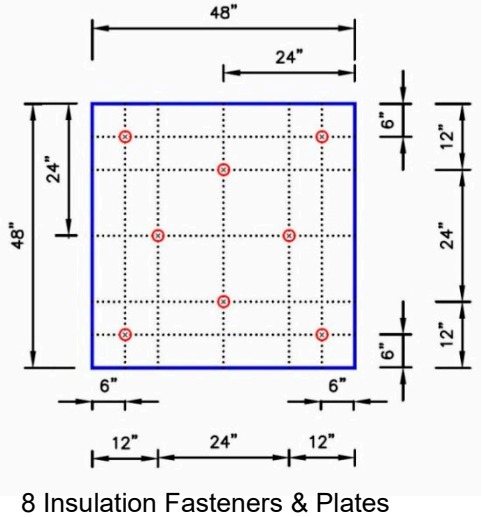

8 Insulation Fasteners & Plates

FM 1-90 for:

1/4" Dens Deck Prime

FM 1-75 for:

¼" Securock

FM 1-90 for all except:

1" Polyiso MP-H/Versicore
(recover only)

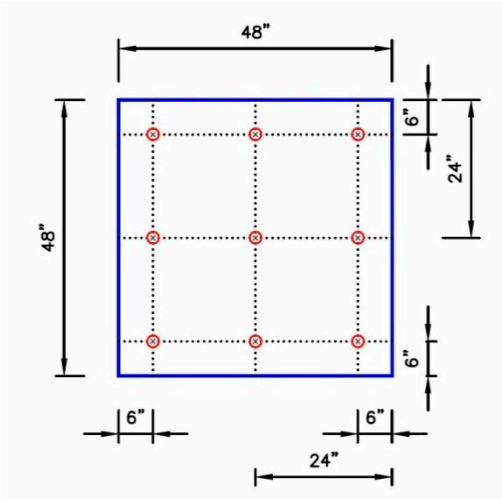

9 Insulation Fasteners & Plates

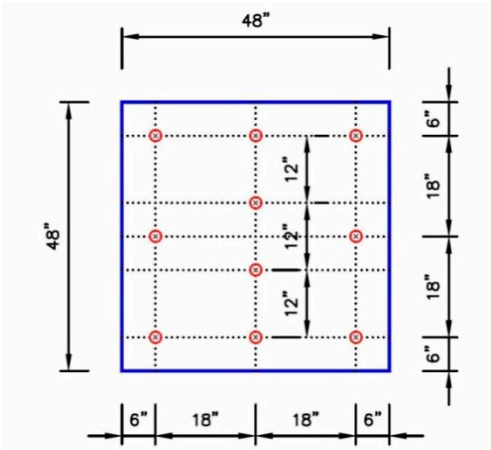

10 Insulation Fasteners & Plates

Fastening pattern should only be used when required by FM for perimeter or corner enhancement or required by Versico for issuance of extended wind speed warranty.

FM 1-150 for:

2” Polyiso MP-H/Versicore
(EPDM, TPO and VersiFleece)

1/2” Securock
(EPDM, TPO and VersiFleece)

FM 1-135 for:

2” Polyiso MP-H/Versicore (PVC)

FM 1-105 for:

½” Dens Deck Prime

FM 1-90 for:

1-1/2” Polyiso MP-H/Versicore (Recover)

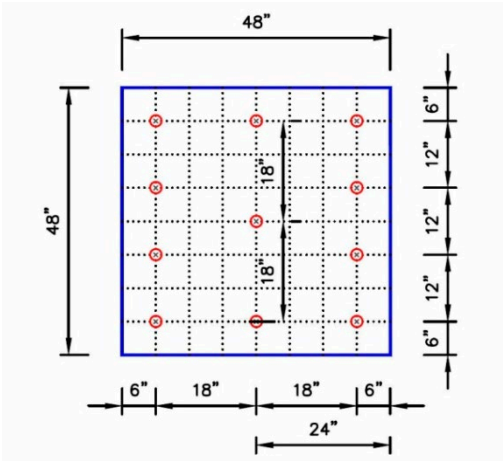

11 Insulation Fasteners & Plates

Fastening pattern should only be used when required by FM for perimeter or corner enhancement or required by Versico for issuance of extended wind speed warranty.

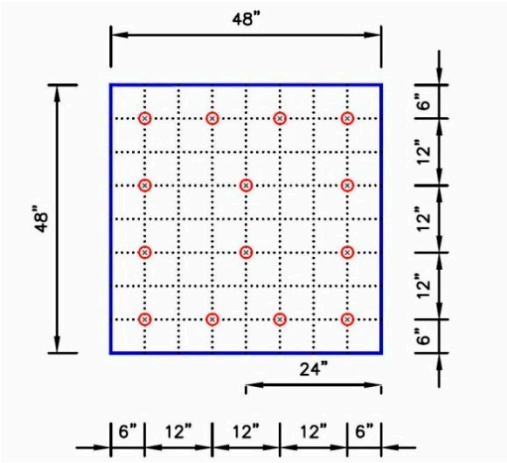

14 Insulation Fasteners & Plates

Fastening pattern should only be used when required by FM for perimeter or corner enhancement or required by Versico for issuance of extended wind speed warranty.

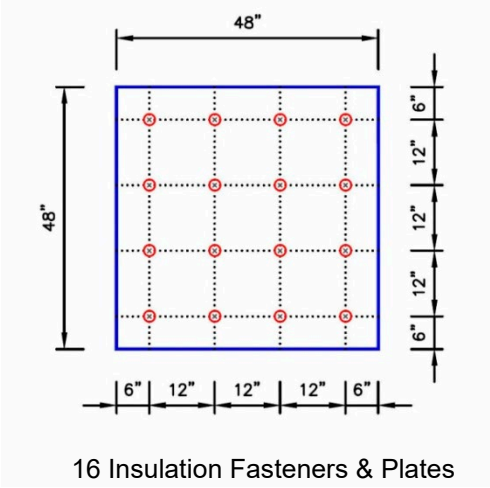

16 Insulation Fasteners & Plates

FM I-285 for:

1/2" Dens Deck Prime (VersiFleece)

FM 1-225 for:

2” SecurShield

2” Polyiso MP-H/Versicore (VersiFleece)

1/2" Securock

FM 1-195 for:

2” Polyiso MP-H/Versicore (EPDM and TPO)

Insulation Patterns for boards 4’ x 8’ in size

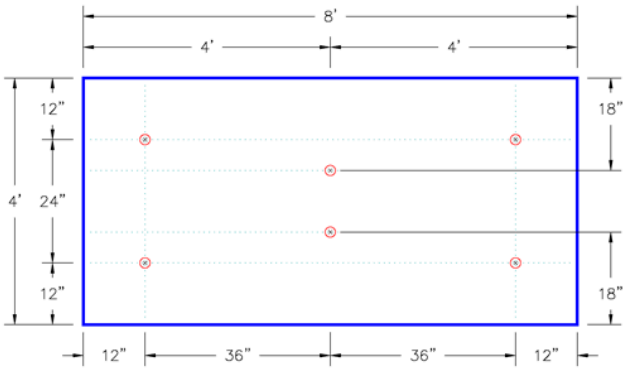

6 Insulation Fasteners & Plates

FM 1-75 for:

1/2" Securock (with InsulTite fasteners and SecurFAST Plates)

FM 1-90 for:

5/8" Securock (with InsulTite fasteners and SecurFAST Plates)

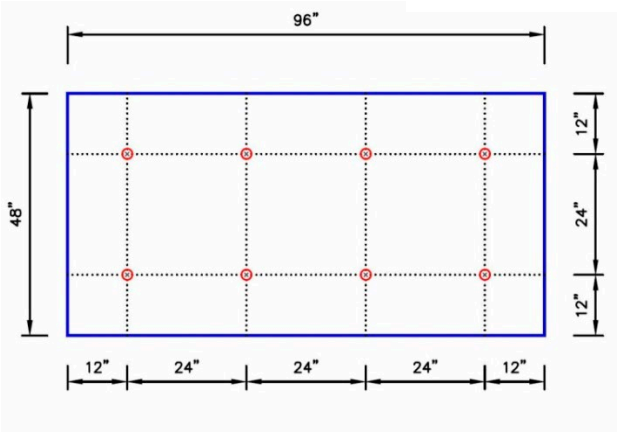

8 Insulation Fasteners & Plates

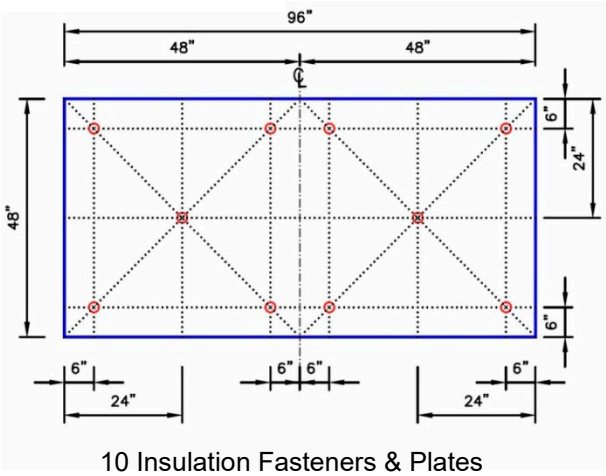

10 Insulation Fasteners & Plates

FM 1-90 for:

2” Polyiso MP-H/Versicore/Versicore NH/Versicore RL or SecurShield

1/2” SecurShield HD Plus

5/8” Dens Deck Prime, DensDeck StormX Prime or Securock

3/8” or 1/2" Securock (with InsulFAST fasteners and SecurFAST Plates)

FM 1-90 for:

1/2" Securock

1-1/2” Polyiso MP-H/Versicore/Versicore NH/Versicore RL (base layer fastened only)

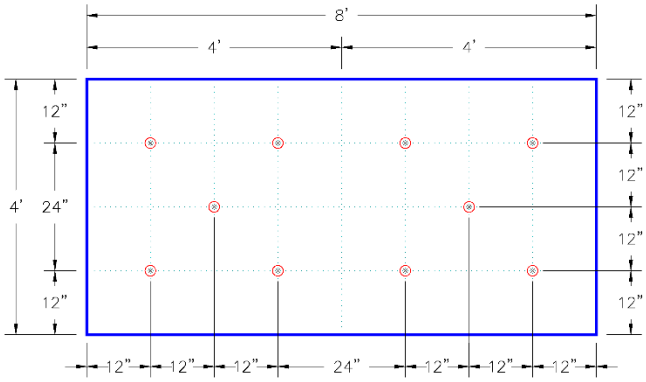

10 Insulation Fasteners & Plates

FM 1-90 for:

1/4" Securock (with InsulTite fasteners and SecurFAST Plates)

1/2" Dens Deck Prime

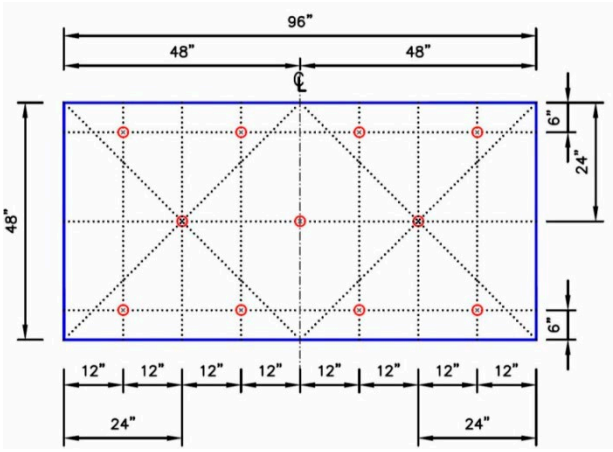

11 Insulation Fasteners & Plates

FM 1-90 for:

1-1/2" Polyiso MP-H/Versicore/Versicore NH/Versicore RL

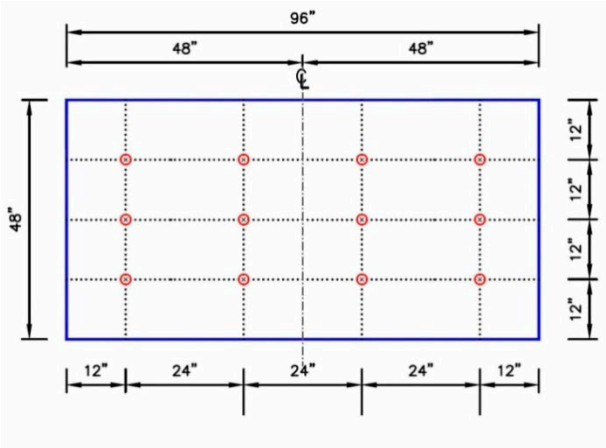

12 Insulation Fasteners & Plates

FM 1-90 for:

1/4" Dens Deck Prime

FM 1-75 for:

1/4" Securock

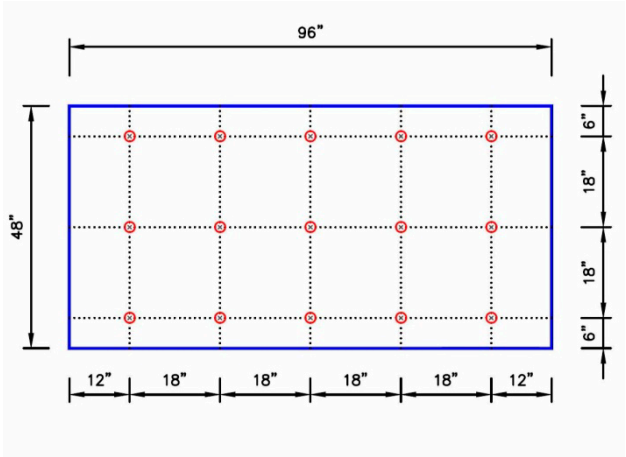

15 Insulation Fasteners & Plates

Fastening pattern should only be used when required by FM for perimeter or corner enhancement or required by Versico for issuance of extended wind speed warranty.

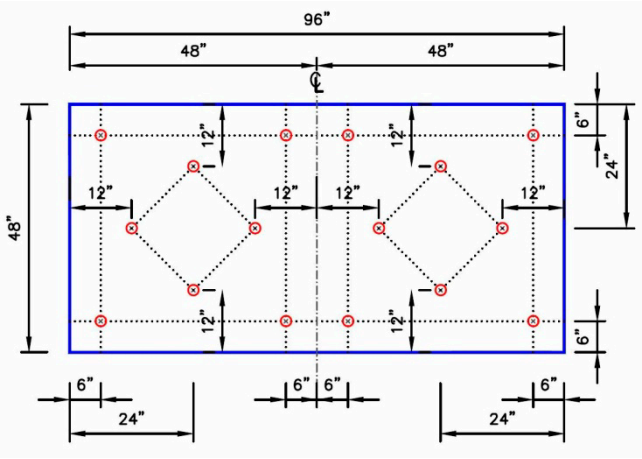

16 Insulation Fasteners & Plates

FM 1-90 for all except:

1" Polyiso MP-H/Versicore/Versicore NH/Versicore RL (Recover Only)

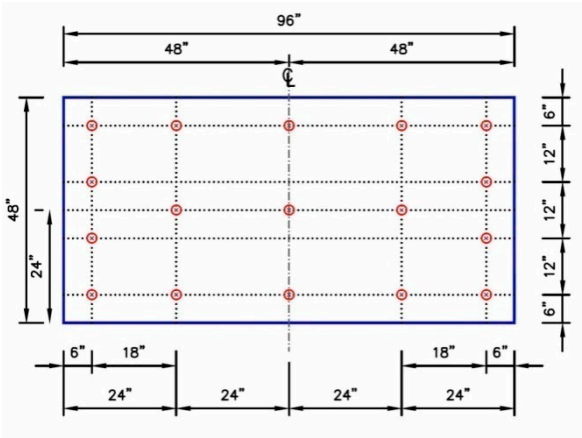

17 Insulation Fasteners & Plates

FM 1-105 for:

7/16" OSB (EPDM)

FM 1-150 for:

7/16" OSB (TPO and VersiFleece)

FM-120 for:

7/16" OSB (PVC)

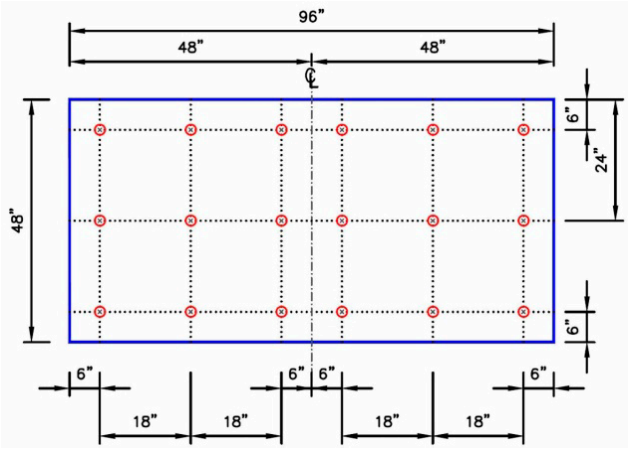

18 Insulation Fasteners & Plates

Fastening pattern should only be used when required by FM for perimeter or corner enhancement or required by Versico for issuance of extended wind speed warranty.

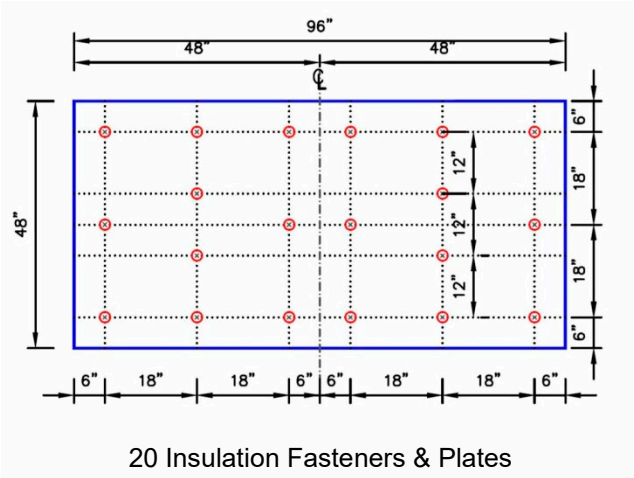

20 Insulation Fasteners & Plates

FM 1-150 for:

1-1/2" VersiCore HD Composite

2" Polyiso MP-H/Versicore/Versicore NH/Versicore RL (EPDM, TPO and VersiFleece) VersiCore HD Composite RL

1/2" Securock (EPDM, TPO and VersiFleece)

FM 1-135 for:

2" Polyiso MP-H/Versicore/Versicore NH/Versicore RL (PVC)

FM 1-105 for:

1/2" Dens Deck Prime

FM 1-90 for:

1" Poyiso MP-H/Versicore/Versicore NH/Versicore RL (Recover)

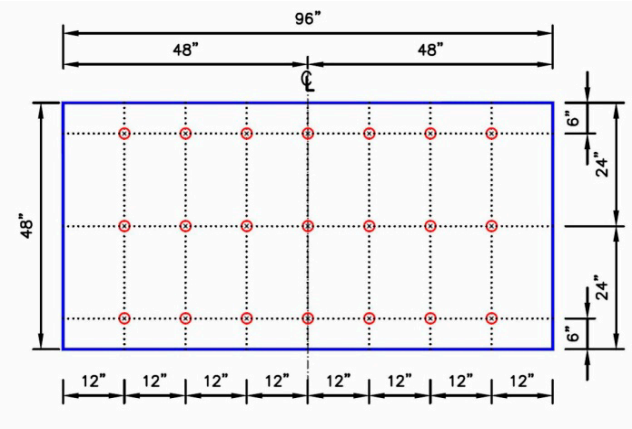

21 Insulation Fasteners & Plates

Fastening pattern should only be used when required by FM for perimeter or corner enhancement or required by Versico for issuance of extended wind speed warranty.

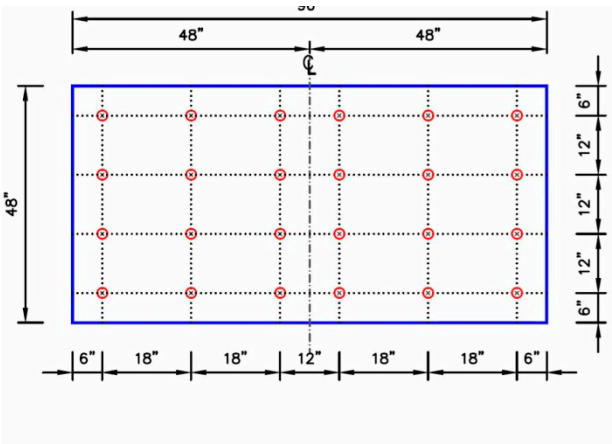

24 Insulation Fasteners & Plates

Fastening pattern should only be used when required by FM for perimeter or corner enhancement or required by Versico for issuance of extended wind speed warranty.

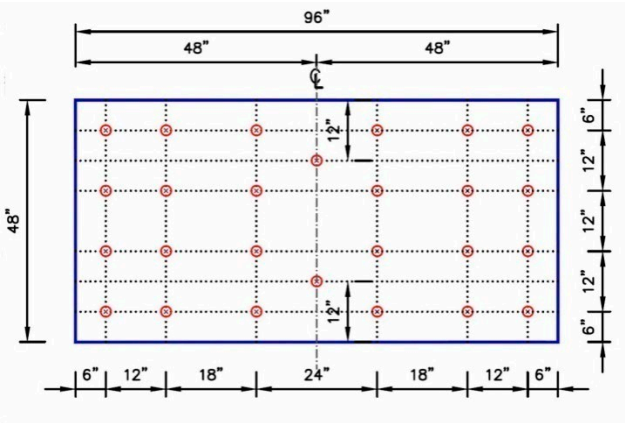

26 Insulation Fasteners & Plates

Fastening pattern should only be used when required by FM for perimeter or corner enhancement or required by Versico for issuance of extended wind speed warranty.

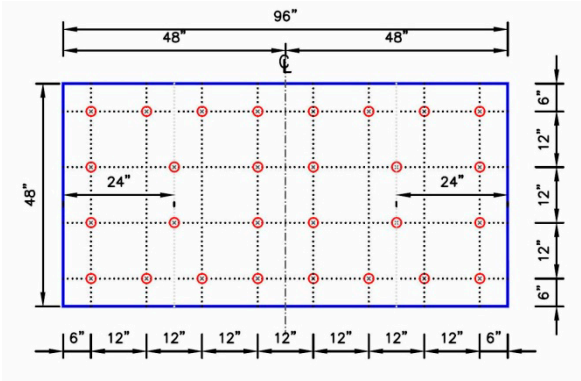

28 Insulation Fasteners & Plates

Fastening pattern should only be used when required by FM for perimeter or corner enhancement or required by Versico for issuance of extended wind speed warranty.

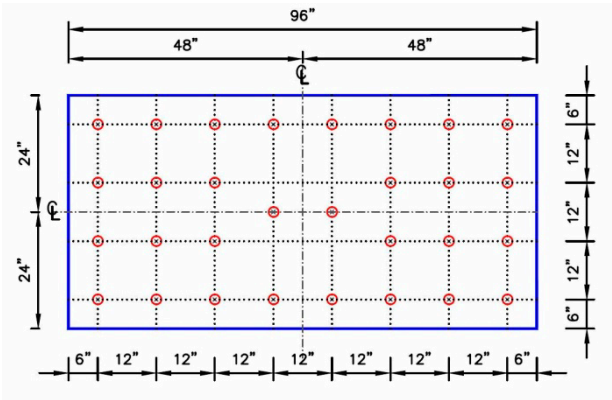

30 Insulation Fasteners & Plates

Fastening pattern should only be used when required by FM for perimeter or corner enhancement or required by Versico for issuance of extended wind speed warranty.

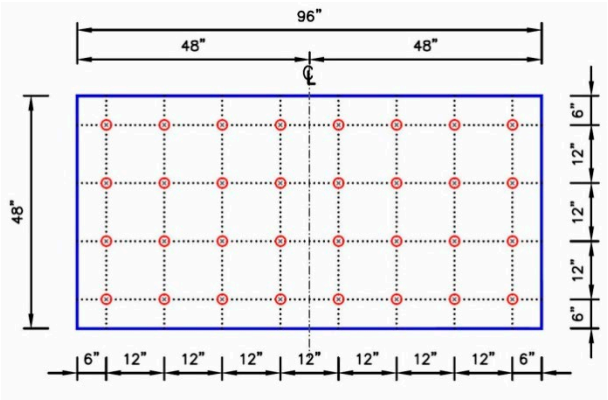

32 Insulation Fasteners & Plates

FM 1-225 for:

2” SecurShield

1/2” Securock

2” Polyiso MP-H/Versicore/Versicore NH/Versicore RL (VersiFleece)

FM 1-195 for:

2” Polyiso MP-H/Versicore/Versicore NH/Versicore RL (EPDM and TPO)

FM 1-285 for:

1/2” Dens Deck Prime (VersiFleece)

Copyright 2024 Versico

Versico and VersiFleece are Trademarks of Versico

Securock is a Trademark of USG Corporation

Dens Deck, DensDeck Prime and Dens Deck StormX Prime are Trademarks of Georgia-Pacific Gypsum LLC

This specification represents the applicable information available at the time of its publication. Owners, specifiers and Versico authorized roofing contractors should consult Versico or their Versico Independent Sales Representative for any information, which has subsequently been made available.

Review the appropriate Versico warranty for specific warranty coverage, terms, conditions and limitations.

DESIGN REFERENCES

DR-06-19

Withdrawal Resistance Criteria

January 2024

The information contained represents guidelines to address possible requirements as part of the building specification as listed under the Quality Assurance or Performance Article. Versico recommends that the building owner retain a design professional to verify that these guidelines are appropriate.

A. The following chart indicates the appropriate Versico Fastener for use with the referenced roof deck and includes the **minimum pullout** and fastener penetration requirements for membrane/insulation securement on Mechanically Attached Roofing Systems and for insulation attachment on Design "A" Adhered assemblies.

Deck Type	Minimum Pullout, in pounds	Approved Versico Fastener	Minimum Penetration
Steel, 22 gauge or heavier	425 (Mechanically Fastened) (1)	HPV Fasteners	3/4"
	360(Adhered)	HPV, HPVX, ASAP or InsulTite Fasteners	
Steel, less than 22 gauge	300 (Adhered Only) (2)	HPV, HPVX, ASAP or InsulTite Fasteners	
Lightweight Insulating Concrete Over Steel (3)	360	HPV, HPVX, ASAP or InsulTite Fasteners (Adhered)	
		HPV Fasteners (Mechanically Fastened)	
Structural Concrete, rated 3,000 psi or greater	800	CD-10 or MP 14-10	1"
Wood Planks	360	HPV, HPVX, ASAP or InsulTite Fasteners (Adhered)	
		HPV Fasteners (Mechanically Fastened)	
OSB Composite and Minimum 15/32" thick Plywood (4)	210 (Mechanically Fastened)	HPV Fasteners (Mechanically Fastened)	1"
	210 (Adhered)	HPV or HPVX Fastener (Adhered)	1"
Gypsum	300	Gyptec or Lite-Deck	1-1/2" (HP-NTB)
			2" (Lite-Deck)
Cementitious Wood Fiber	300 (Mechanically Fastened)	Gyptec	1-1/2"
	225 (Adhered Only)		

(1) Mechanically Fastened Roofing Systems are not permitted over corrugated steel decks, regardless of gauge

(2) Mechanically Fastened Roofing Systems are not permitted over corrugated steel decks less than 22 gauge unless used in conjunction with lightweight insulating concrete and acceptable pullouts are obtained using HPV Fasteners.

(3) Fasteners installed through the lightweight insulating concrete into the steel deck below.

(4) 7/16" OSB or 5/8" OSB and 15/32" 3-Ply Plywood OR 15/32" 5-Ply Plywood.

VERSICO ROOFING SYSTEMS

B. Withdrawal resistance testing may be conducted by an independent laboratory, fastener manufacturer or a representative of Versico on the following roof decks. The results of the pullout tests must be documented and submitted to Versico when the pullout results are less than listed on the previous chart.

1. **Fully Adhered Roofing Systems:**

   a. Cementitious wood fiber or gypsum decks – GypTec or Lite-Deck (gypsum decks only) Fasteners or an approved fastener by others.

   b. Steel decks lighter than 22-gauge - Versico HPV, HPVX, ASAP, InsulTite Fasteners or an approved fastener by others.

   c. Oriented strand board (OSB) decks (less than 5/8" thick) - Versico HPV, HPV-XL or an approved fastener by others.

2. **Mechanically Attached Roofing Systems:**

   a. Cementitious wood fiber or gypsum decks – GypTec Fastener

   b. Lightweight insulating concrete over steel decks lighter than 22 gauge - Versico HPV Fasteners. Fasteners must penetrate the steel deck below the lightweight concrete.

   c. Minimum 7/16" thick oriented strand board (OSB) decks - Versico HPV Fasteners.

   d. Minimum 5/8" thick oriented strand board (OSB) decks - Versico HPV Fasteners.

   e. Plywood decks less than 5/8" thick - Versico HPV Fasteners.

3. On all other acceptable roof decks, a withdrawal resistance test is strongly recommended.

C. **Withdrawal Resistance Procedures**

1. On retrofit projects, a core cutter shall be used to remove existing roofing material prior to conducting the withdrawal resistance test (even if the existing roofing membrane is specified to remain). Existing roofing materials will contribute to a higher, misleading pullout value.

2. The following minimum trial fastener samples must be installed and tested over the roof deck at each level:

   a. For each roof level of 5,000 sq. ft. or less, conduct a minimum of 3 pullouts.

   b. For each roof level greater than 5,000 sq. ft. and less than 20,000 sq. ft., conduct a minimum of 10 pullouts.

   c. For each roof level greater than 20,000 sq. ft. and less than 50,000 sq. ft., conduct a minimum of 15 pullouts.

   d. For each roof level greater than 50,000 sq. ft. and less than 100,000 sq. ft., conduct a minimum of 20 pullouts.

   e. For each roof level greater than 100,000 sq. ft., conduct a minimum of 1 pullout per each 5,000 sq. ft.

   Note: On projects with multiple roof levels, when pullouts are conducted on the main roof level, smaller canopies, overhangs, penthouses, etc., of 1,000 square feet or less will not require pullout tests providing these areas consist of the same decking material as the main roof level.

3. The trial fastener installations should be tested in various locations of the roof deck including roof corners and perimeters (areas parallel to the edge of the roof with a width which is 0.4 times the building height). Designate the test locations on a roof plan and include with the submittals to Versico, when requested.

For building height ≤ 60 ft: .4 x the building height or .1 x the width (whichever is less), but not less than 4% the width.
For buildings > 60 ft: .1 x the width

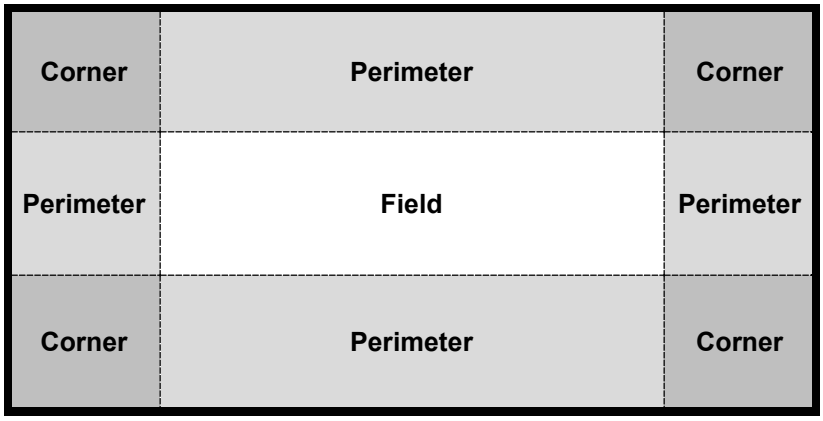

Copyright 2024 Versico

Versico and the Versico logo are Trademarks of Versico

This specification represents the applicable information available at the time of its publication. Owners, specifiers and Versico authorized roofing contractors should consult Versico or their Versico Independent Sales Representative for any information, which has subsequently been made available.

Review the appropriate Versico warranty for specific warranty coverage, terms, conditions and limitations.

DESIGN REFERENCES

DR-07-23

CRRC / LEED Information

January 2024

The table below illustrates membrane properties as they pertain to reflectivity, emittance, recyclability and test methods. The data can be referenced when compliance with CRRC standards and LEED pre-requisites are required. Other LEED compliant information could be obtained by contacting Versico or by consulting www.versico.com . Additional LEED information is contained in various Technical Data Bulletin.

VersiGard (white) EPDM Membranes - VersiWeld TPO Membranes (White/Tan/Gray)

Physical Property	Test Method	VersiGard White	VersiWeld	VersiWeld	VersiWeld
Membrane Color		White	White	Tan	Gray
CRRC – Initial solar reflectance	ASTM C1549	0.76	0.79	0.71	0.46
CRRC – Solar reflectance after 3 years (uncleaned)	ASTM C1549	0.64	0.70	0.64	0.43
CRRC – Initial thermal emittance	ASTM C1371	0.90	0.90	0.86	0.89
CRRC – Thermal emittance after 3 years (uncleaned)	ASTM C1371	0.87	0.86	0.87	0.88
LEED – Thermal emittance	ASTM E408	0.90	0.90	0.86	0.89
Solar Reflective Index (SRI) - Initial	ASTM E1980	94	99	86	53
Solar Reflective Index (SRI) – 3 YR	ASTM E1980	77	85	77	48
LEED – Pre-consumer recycled content	-	0%	10%	10%	10%
LEED – Post-consumer recycled content	-	0%	0%	0%	0%
LEED – Manufacturing location	-	Carlisle, PA or Greenville, IL	Senatobia, MS or Tooele, UT	Senatobia, MS or Tooele, UT	Senatobia, MS or Tooele, UT

Note: VersiGard (Black) Membrane: SRI 7; Pre-consumer recycled content 0%; Post-consumer recycled content 3%; Manufacturing Location Carlisle, PA and Greenville, IL.

VERSICO ROOFING SYSTEMS

VersiFlex PVC/KEE HP Membranes (White/Tan/Gray)

Physical Property	Test Method	VersiFlex	VersiFlex	VersiFlex	VersiFlex KEE HP	VersiFlex KEE HP	VersiFlex KEE HP
Membrane Color		White	Tan	Gray	White	Tan	Gray
CRRC – Initial solar reflectance	ASTM C1549	0.86	0.72	0.59	0.87	0.74	0.58
CRRC – Solar reflectance after 3 years (uncleaned)	ASTM C1549	0.63	0.60*	0.49*	0.71*	0.63*	0.50*
CRRC – Initial thermal emittance	ASTM C1371	0.89	0.87	0.89	0.89	0.88	0.88
CRRC – Thermal emittance after 3 years (uncleaned)	ASTM C1371	0.87	0.86*	0.86*	0.87*	0.84*	0.84*
LEED – Thermal emittance	ASTM E408	0.89	0.87	0.89	0.89	0.88	0.88
Solar Reflective Index (SRI) - Initial	ASTM E1980	108	88	70	110	90	69
Solar Reflective Index (SRI) – 3 YR	ASTM E1980	75	71*	56*	87*	71*	56*
LEED – Pre-consumer recycled content	-	10%	10%	10%	10%	10%	10%
LEED – Post-consumer recycled content	-	0%	0%	0%	0%	0%	0%
LEED – Manufacturing location	-	Greenville, IL	Greenville, IL	Greenville, IL	Greenville, IL	Greenville, IL	Greenville, IL

* CRRC Rapid Ratings: These are interim laboratory-aged values that simulate weathered values. These values will be replaced with the measured three-year aged values upon completion of the weathering process. SRI values calculated using Rapid Ratings may change once the aged rating replaces the interim rating.

Copyright 2024 Versico

Versico, VersiGard, VersiWeld and VersiFlex are trademarks of Versico
This Design Reference represents the applicable information available at the time of its publication. Owners, specifiers and Versico authorized roofing contractors should consult Versico or their Versico Independent Sales Representative for any information that has subsequently been made available.

Review the appropriate Versico Warranty for specific warranty coverage, terms, conditions and limitations.

DESIGN REFERENCES

DR-08-11

Wood Nailers and Securement Criteria

(Factory Mutual Loss Prevention Data Sheet 1-49)

January 2024

The information contained represents guidelines to address possible requirements as part of the building specification as listed under the Quality Assurance or Performance Article. Versico recommends that the building owner retain a design professional to verify that these guidelines are appropriate.

One of the most often overlooked details on a roofing system is the attachment method for wood nailers at the perimeter of the roof. Factory Mutual Global (FMG) publishes design recommendations for the attachment of wood nailers to various substrates and for the attachment of perimeter flashing details to wood nailers. This information is contained in Factory Mutual's Property Loss Prevention Data Sheet 1-49. In accordance with that Data Sheet, the information listed below should be referenced when selecting an appropriate perimeter attachment method.

General Criteria

A **horizontal wood nailer** is used to provide an effective substrate for some installation details and for other roof accessories. In addition, it is used to provide solid protection for the edge of the membrane underlayment. Minimum thickness of the nailer must be such that the top of the nailer is flush with the top of the membrane underlayment.

1. The width of the nailers must exceed the width of the metal flange of edgings, scuppers, etc.

2. When treated lumber is specified, it is recommended that only lumber that has been pressure treated with salt preservatives be specified. Lumber treated with any of the wood preservatives such as, Creosote, Pentachlorophenol, Copper Naphthenate and Copper 8-quinolinolate will adversely affect the membrane when in direct contact and are, therefore, **unacceptable**.

   If non-treated lumber is to be specified, it must be stored to protect from moisture sources. A seal should be provided between the non-treated lumber and a concrete or gypsum substrate (similar to a sill sealer).

3. Methods used to fasten the nailer vary with building conditions; however, it is essential that secure attachment of durable stock be accomplished. Factory Mutual Loss Prevention Data Bulletin 1-49 (Perimeter Flashing) contains options for the spacing and sizing of fasteners based on the project wind zone.

4. Wood nailers are not covered by the Versico warranty.

- Wood nailers that are anchored to steel, wood or masonry decking should not be less than 2" X 6" nominal (minimum1-1/2" X 5-1/2").

- Wood nailers should be Douglas Fir, Southern Yellow Pine or of wood having similar decay resistant properties.

VERSICO ROOFING SYSTEMS

Attachment to Masonry Walls

When fastening to a masonry wall, a 1/2 inch diameter anchor bolt is placed 48 inches on center at an 8 inch minimum depth (12 inches minimum when masonry walls are composed of lightweight aggregate or cinder) as shown in **Figure 1**. Each anchor bolt is positioned (staggered if the wood nailer is wider than 6 inches) in a block core or air space and tightly filled with concrete to the depth of the bolt.

Note: Plastic parts must not be used with masonry anchors.

FMG has specific requirements concerning filling of cores or voids in the top course of cinder blocks.

For example:

Projects requiring 75-psf or 90-psf ratings - fill the entire top course.
Projects requiring 60-psf ratings - fill only required where anchor bolts are positioned (48 inches on center in the field, 24 inches on center at roof corners).

At outside corners, the fastening density must be increased within the first 8 feet in each direction by positioning anchor bolts 24 inches on center.

An alternate method may be used by installing 3/8 inch diameter anchor bolts spaced 32 inches apart. For outside corners, bolts are fastened 16 inches apart, 8 feet from each side of the corner. If additional wood nailers are needed, refer to **Figure 5** for attachment of additional wood nailers.

Attachment to Steel and Wood Decking

- Penetration of the fasteners should be to the <u>top flutes only</u>. The fasteners must be staggered as shown in **Figure 2**.

- The staggered fastening pattern should be increased within 8 feet from outside corners as shown in **Figure 3A**.

- If the perimeter nailer is to be secured to a steel angle, anchor bolts must be positioned at 48 inch centers as show in **Figure 4**.

- On wood decks, the staggered fastening pattern with galvanized steel screws should be utilized as shown in **Figure 2**.

  Caution: Attention should be paid to the FMG requirement which calls for galvanized steel washers (minimum 5/8 inch outside diameter) to be used in conjunction with galvanized screws. This requirement is not recognized in most cases and most often forgotten.

Attachment of Additional Wood Nailers

- When additional wood nailers are required, they must be attached with galvanized nails or lag screws that penetrate into the bottom nailer at 1-1/4 inches using a staggered fastening pattern in two rows at 24 inches apart as shown in **Figure 5**.

- The increased fastening density within 8 feet from outside corners is still required and must comply with **Figure 3**.

- The Data Sheet also contains important information pertaining to attachment of metal fascia/edging especially for those edgings which are shop fabricated.

- Even though not emphasized in the Data Sheet, contractors should examine or question existing conditions to determine if existing wood nailers are attached in compliance with the above criteria. If not, existing wood

nailers should be refastened using one of these options and additional wood nailers must be secured following **Figure 5**.

Projects where Factory Mutual is the insurance underwriter should be reviewed by the local Factory Mutual office for specific criteria.

Since wood nailers are not considered part of the Versico Membrane System Warranty, they are not addressed in depth in the Versico specifications nor inspected by the Versico Field Service Representative. Wood nailers, however, play a major role in the performance of the roofing system and contribute to the wind uplift resistance of the roof edge which is the first line of defense during wind storms.

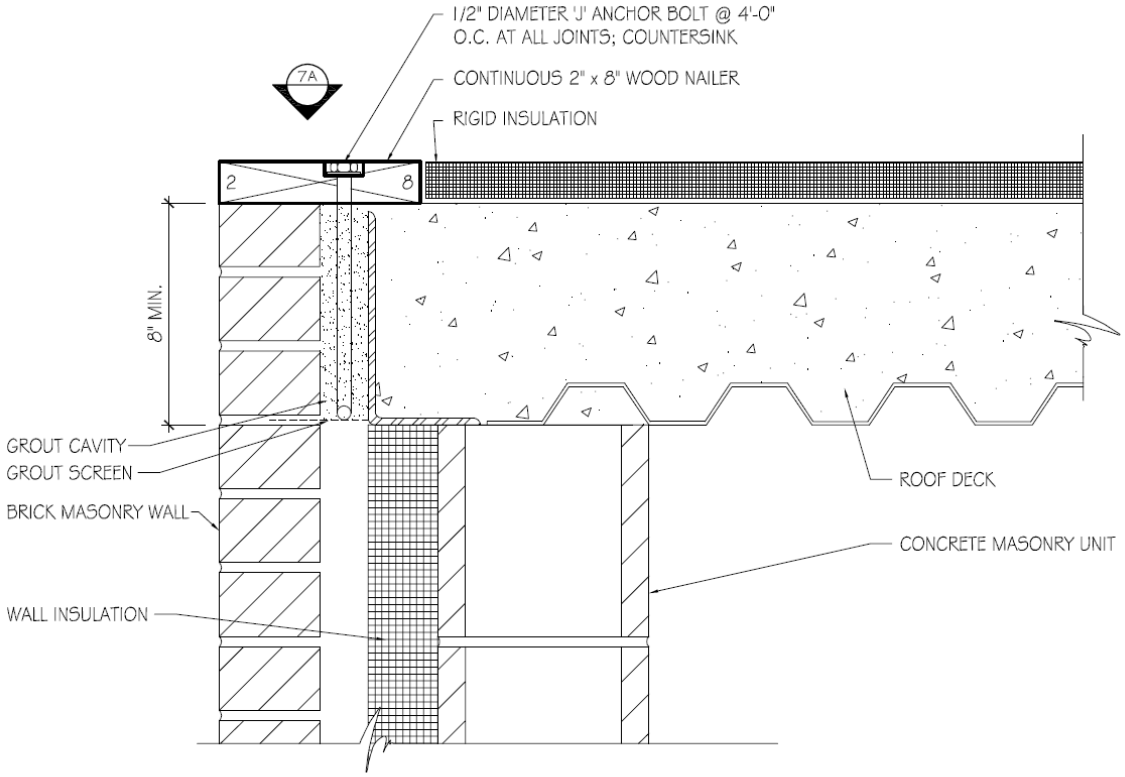

FIGURE 1 - ROOF EDGE WOOD BLOCKING - ANCHOR BOLT SECUREMENT

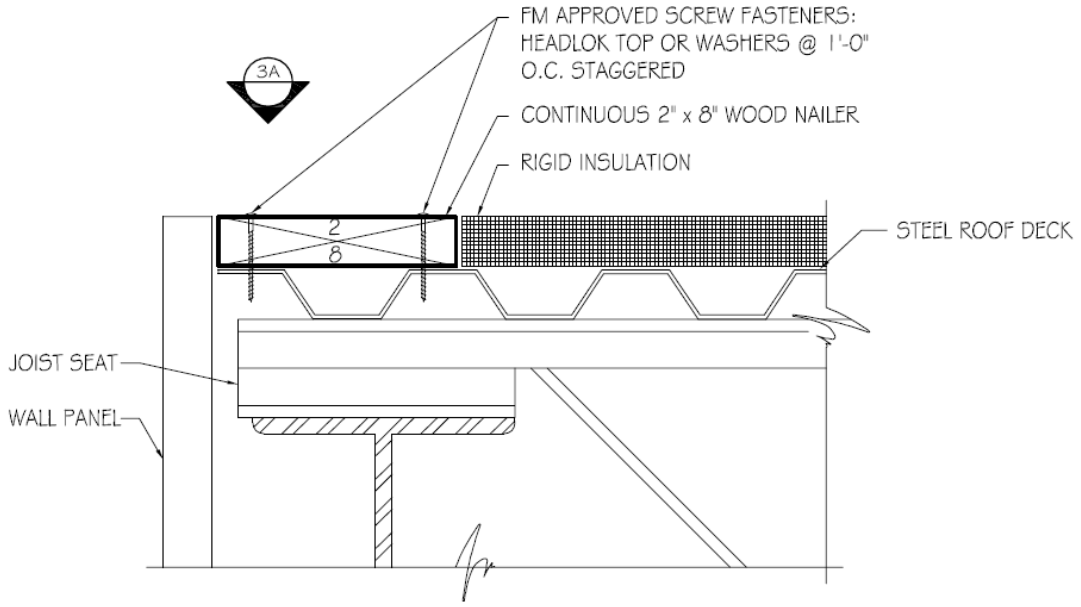

FIGURE 2 - ROOF EDGE WOOD BLOCKING - SCREW FASTENER ANCHORAGE

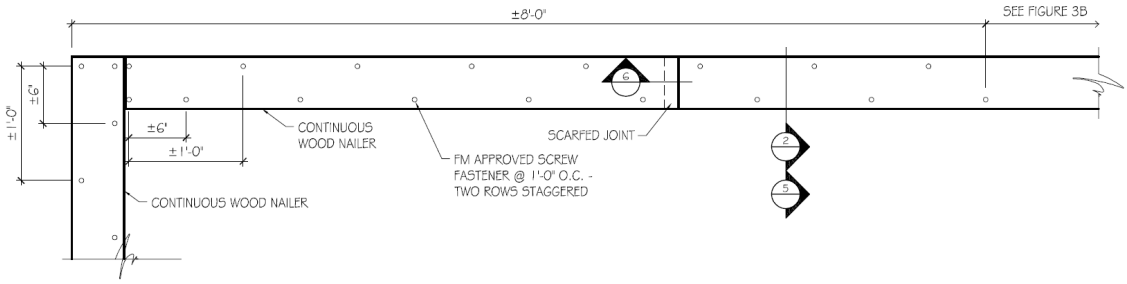

FIGURE 3A - WOOD BLOCKING CORNER ANCHORAGE 8'-0" FROM CORNER

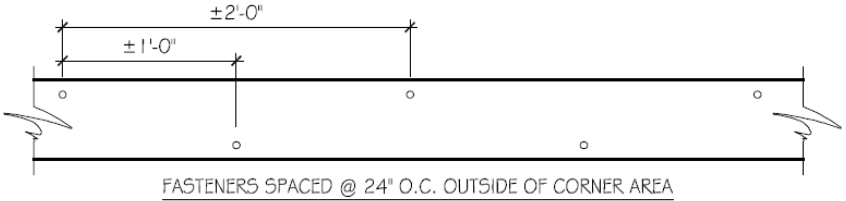

FASTENERS SPACED @ 24" O.C. OUTSIDE OF CORNER AREA

FIGURE 3B - TYPICAL ROOF EDGE WOOD BLOCKING - SCREW FASTENER ANCHORAGE

1 1/2" = 1'-0"

2/22/11

NOTES:

1. 3/4" Ø ANCHOR BOLTS @ 48" O.C.
2. AT 8'-0" CORNERS: FASTENING DOUBLED (24" O.C. MAX)

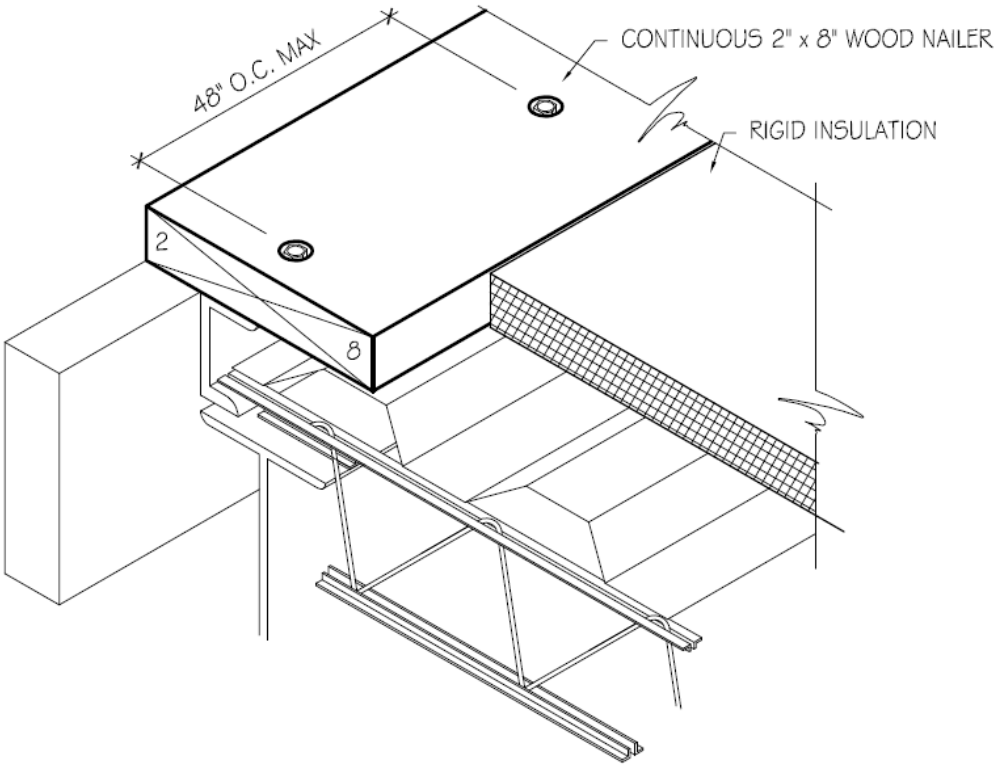

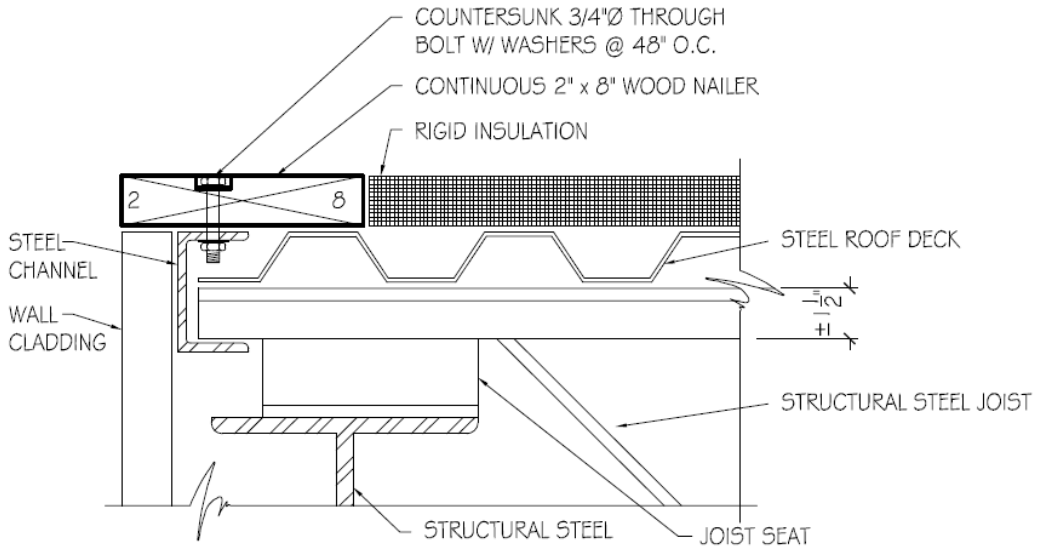

FIGURE 4 - ROOF EDGE WOOD BLOCKING - THROUGH BOLT ANCHORS

NOTES:
1. AT 8'-0" CORNERS, FASTENERS DOUBLED (12" O.C. IN EACH ROW).

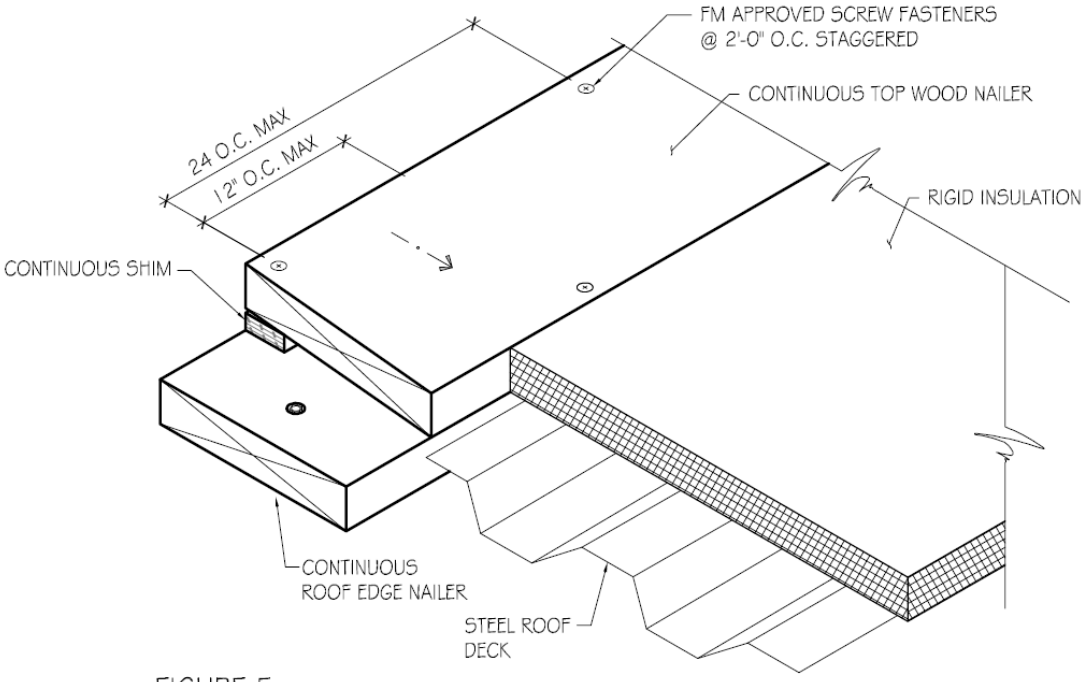

FIGURE 5

STEEL WOOD DECK SCREW FASTENERS AS FOLLOWS:

- 2 x 4 - 2 SCREW FASTENERS
- 2 X 6 - 3 SCREW FASTENERS
- 2 X 8 - 4 SCREW FASTENERS

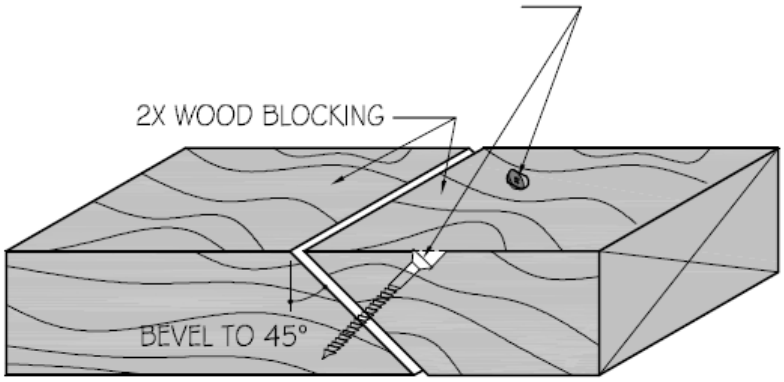

FIGURE 6 - MITERED WOOD JOINT DETAIL

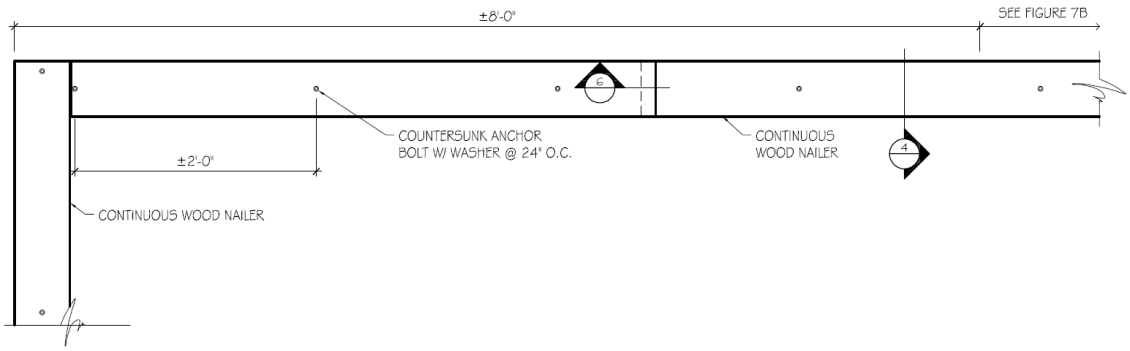

FIGURE 7A - ROOF EDGE WOOD BLOCKING @ CORNER - THROUGH BOLT ANCHORAGE 8'-0" FROM CORNER

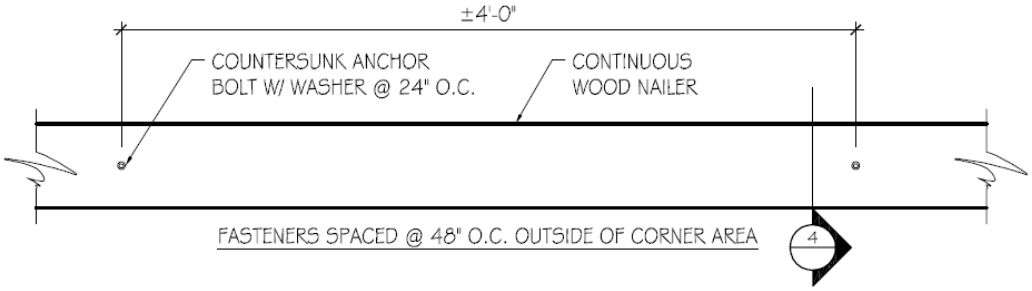

FIGURE 7B - TYPICAL ROOF EDGE WOOD BLOCKING - THROUGH BOLT ANCHORAGE

Copyright 2024 Versico

Versico is a Trademark of Versico

This specification represents the applicable information available at the time of its publication. Owners, specifiers and Versico authorized roofing contractors should consult Versico or their Versico Independent Sales Representative for any information, which has subsequently been made available.

Review the appropriate Versico warranty for specific warranty coverage, terms, conditions and limitations.

DESIGN REFERENCES

DR-09-20

Considerations for Hail Design

January 2024

The information contained represents guidelines to address possible requirements as part of the building specification as listed under the Quality Assurance or Performance Article. Versico recommends that the building owner retain a design professional to verify that these guidelines are appropriate.

The map below (Figure 1) depicts areas of the United States that are more prone to hail storms. In areas of potential hail, the use of a thicker roofing membrane is recommended to provide greater puncture resistance.

1. VersiFleece 115 or thicker VersiFleece membranes are recommended for areas prone to large hail.

2. Large hail areas may also warrant the use of thicker conventional EPDM, TPO, PVC or KEE HP membrane in conjunction with a rigid membrane underlayment/cover board.

3. To eliminate possible damage of membranes, the substrate below the membrane should be adhered. Insulation fasteners and plates are not recommended for use directly beneath the membrane (except where used for membrane securement).

4. The use PVC membrane is not recommended in Hail Zones greater than 1 inch in diameter, unless specifically approved.

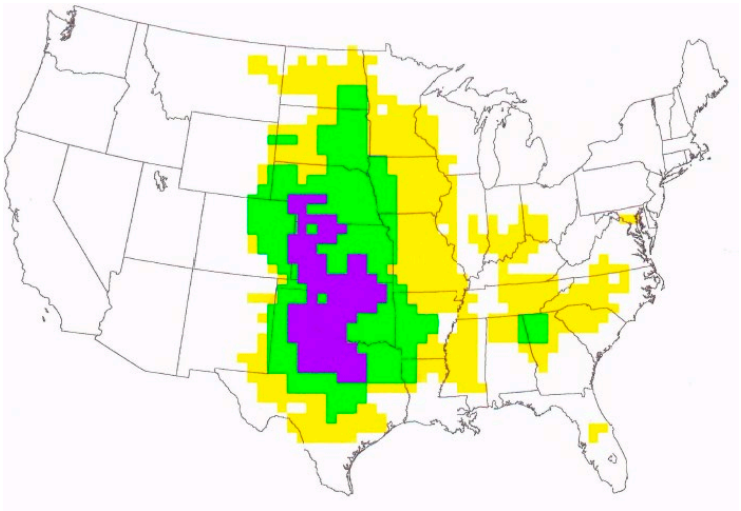

Fig. 1 – U.S. Hail Zone Map

0.5" – 1.0" Hail **1.0" – 2.0" Hail** **2.0" – 4.0" Hail**

VERSICO ROOFING SYSTEMS

Warranty

A. A warranty covering leaks caused by hail, maximum 1" diameter with VersiFleece 100 (TPO) or 105-mil (PVC) membrane and maximum 2" diameter with VersiFleece 115-mil (TPO) or 135-mil (PVC) and maximum 3” diameter 135-mil (TPO) membrane, can be issued. Contact Versico for specific information. An additional 1” of hail coverage is available when Flexible DASH adhesive in full coverage or extrusions at 4” on center is utilized with TPO or PVC KEE HP VersiFleece

B. On projects utilizing VersiFleece 115 membrane, a 5, 10, 15, or 20-year warranty with limited coverage for accidental punctures (up to 16 man-hours per year) is available.

C. On projects utilizing VersiFleece 135 membrane, a 5, 10, 15, 20, 25 or 30-year warranty with limited coverage for accidental punctures (up to 32 man-hours per year) is available for an additional charge.

Copyright 2024 Versico

Versico and VersiFleece are Trademarks of Versico

This specification represents the applicable information available at the time of its publication. Owners, specifiers and Versico authorized roofing contractors should consult Versico or their Versico Independent Sales Representative for any information, which has subsequently been made available.

Review the appropriate Versico warranty for specific warranty coverage, terms, conditions and limitations.

DESIGN REFERENCES

DR-12-18

Metal Edging

January 2024

The information contained represents guidelines to address possible requirements as part of the building specification as listed under the Quality Assurance or Performance Article. Versico recommends that the building owner retain a design professional to verify that these guidelines are appropriate.

Pre-Manufactured vs. Shop Fabricated Metal

Introductions

The devastation caused by major hurricanes in Florida as well as the destruction of New Orleans and a portion of the Gulf Coast from Hurricanes Katrina and Rita serve as important reminders of the importance of a strong, impermeable roofing system.

Understandably, the roof edge is one of the more important components of a roofing system. Metal roof edging has a far greater function than merely providing an aesthetic trim at the top of the building – it is a critical component that holds the roofing membrane in place.

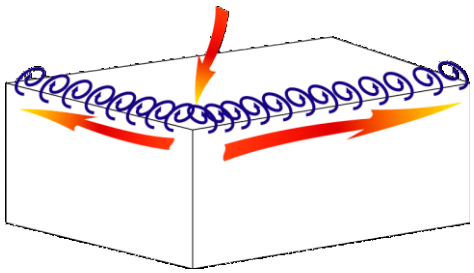

Typical Vortex Patterns on Rooftop Approaching at Corner

- Red Arrows – positive wind pressures acting on the building
- Blue Swirls – negative pressures created by the wind pressure forcing the materials on the edge in an upward and outward direction

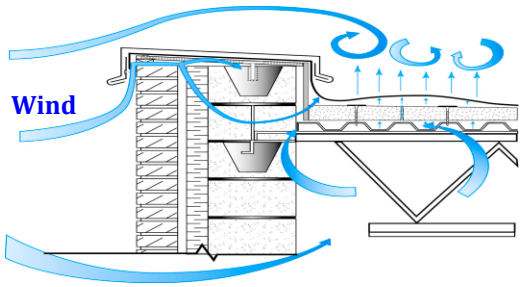

Roof Uplift

The diagram illustrates the wind uplift patterns on a coping and how it moves over and under the coping.

Drawings courtesy of W. P. Hickman Company

VERSICO ROOFING SYSTEMS

Wind Damage Investigation

The Roofing Industry Committee on Weather Issues (RICOWI) found roof edges to be number 2 out of a list of 20 roofing issues that needed improvement. In 2006 they released a study that analyzed the 2004 Florida hurricanes (Hurricanes Charley and Ivan). The report found that most of the damage to roofs was caused by failure at the roof perimeter, further confirming the importance of **properly specified and installed roof edge systems**.

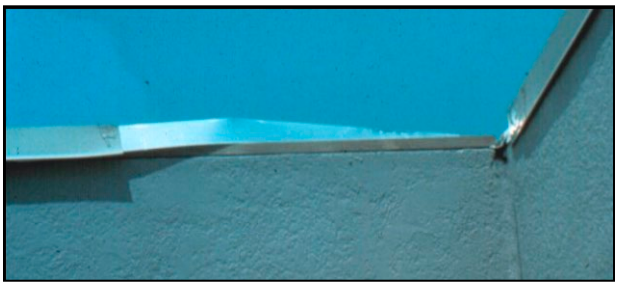

Another key finding from the study included discovery of cleat gauges that were less than those recommended by FM Global 1-49 and ANSI/SPRI ES-1. The committee also found that 95 percent of roof failures were caused by poor workmanship and substituted materials.

Factory Mutual Global (**FMG**) and others have found that over 80% of all roof failures can be attributed directly to failure of the roof edge. It is clear that specifying and installing a roof edge that holds the roof membrane in place as well as looks good is critical to the performance of a building's roof system.

Pre-Manufactured Edging

The performance of pre-manufactured roof edge systems is generally well recognized. Most of these systems are engineered with covers, which tightly snap onto cleats or chairs with pre-punched, slotted fastening holes that assure proper attachment to the roof edge while still allowing for thermal movement. Most of the pre-manufactured systems are tested per ANSI/SPRI ES-1 criteria (now part of the International Building Code) to assure that they resist the calculated wind loads for the project on which they will be used. Additionally, many pre-manufactured roof edge systems are also tested and approved by Factory Mutual Global to further assure their performance.

ES-1
Wind Design Standard for Edge Systems Used with Low Slope Roofing Systems

In 1998 SPRI (Single Ply Roofing Industry, a roofing industry trade association) developed a series of three tests for judging the quality and durability of fascia and coping systems under the **ES-1**, an edge standard for low-slope roofs. The **ES-1** was developed to aid architects, specifiers, and other roofing professionals in ensuring that a quality roof edge is specified and installed.

ES-1 was accepted by the American National Standard Institute (ANSI) as a standard and in 2002 the IBC (International Building Code) included the **ES-1** guidelines into their code. With its inclusion with in the 2003 IBC, **ES-1** has now become building code and a majority of the United States has adopted some version of the IBC. Delaware, Missouri and Nebraska have adopted versions of IBC but may on a Local Government level, refer to the Authority Having Jurisdiction (AHJ) in those states.

So designing a roof edge system that meets **ANSI/SPRI ES-1** Wind Design Standard is not just a good idea; it is the law in many states.

The main reason for the development of **ES-1** was to improve the longevity and safety of low-slope commercial roofs, to protect the building owner's investment by reducing the risk of edge failure, and consequentially roof failure. Basically, **ES-1** provides formulas for calculating the wind load on edges of low-slope roofs and prescribes methodology for testing and evaluating the ability of edge systems to withstand those loads; as a result this ensures wind resistance and long-term performance.

The **ANSI/SPRI ES-1** standard is comprised of three pull-off tests (two tests for fascia and one test for coping) and they are based on the American Society of Civil Engineers' document ASCE-7/02 – *Minimum Design Loads for Buildings and Other Structures.*

- **Test Method RE-1** measures how well the edge secures the perimeter on ballasted and mechanically attached membranes.
- **Test Method ES-2** is a pull-off test for the metal edge flashing. It tests for wind load on the face dimension of the flashing system.
- **Test Method ES-3** tests the strength of the metal coping cap to assure it meets or exceeds calculated design wind pressure. It tests wind load on both the top and back leg dimensions.

How the test is performed – The tests use a pull/release and pull/release method rather than one continuous pull. This allows for a realistic simulation of wind, which acts on a building in periodic gusts rather than one long, continuous gust.

Roof Edge Test RE-1 • A static test with a 100 lb. load every foot • The membrane is pulled at a 45° angle to the roof deck to simulate a billowing membrane • The termination must withstand a minimum force of 100 lbs./foot • Failure is defined as any event that allows the membrane to come free of the edge termination or the termination to come free.	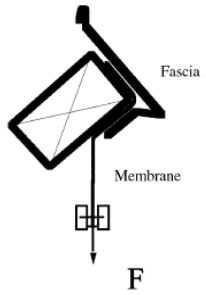
Roof Edge Test RE-2 • Determines the maximum load at failure • Failure is the loss of securement of any component of the roof edge system.	**Fascia Blow-Off Test Set Schematic** (Force at Failure x Face Area = Blow-off Resistance) 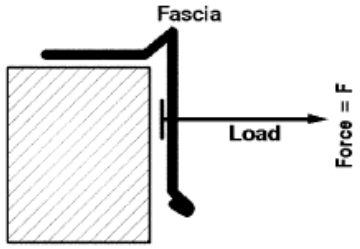
Roof Edge Test RE-3 • Simultaneously tests the vertical and horizontal wind gust load coefficient • Failure is the loss of securement of any component of the roof edge system.	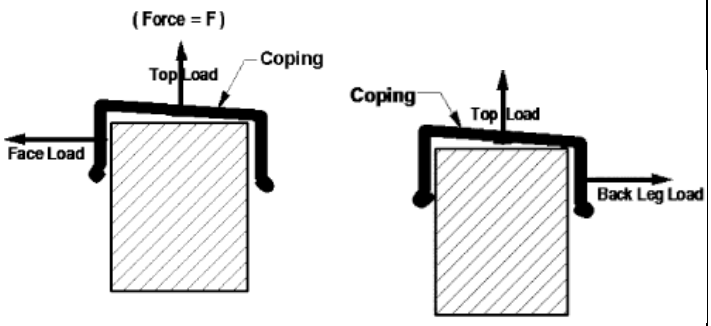

ES-1 / FM Compliance

Versico supplies a wide range of metal fascia systems which meet the referenced design guidelines and carry FM Class 1-90 approval. Versico's metal edging is also covered by the Versico Membrane System Warranty.

Versico Metal Edging			
Product	**Type**	**FM Approval**	**ES-1 Compliant**
VersiTrim 300	Coping	1-90 (20 ga cleat) 1-180 (16 ga cleat)	Yes
VersiTrim 300	Fascia	1-225	Yes
VersiTrim 3000	Fascia	1-180 (.050 Alum. Retainer) 1-465 (20 ga Steel Retainer)	Yes
VersiTrim 3000XT	Fascia	1-315	Yes
VersiTrim 200	Coping	1-90	RE-3 (140 lbs/sf)
VersiTrim 200	Fascia	1-195	RE-2 (150 lbs/sf)
VersiTrim 2000	Fascia	1-645	RE-2 (470 lbs/sf)
VersiTrim 2000	Extended Fascia	1-270	RE-2 (190 lbs/sf)
VersiTrim 2000	Canted Fascia	1-270	RE-2 (190 lbs/sf)
VersiTrim One	Fascia	-	RE-2 (400 lbs/sf)
VersiTrim One	Edge (MA/FA)	-	RE-2 (210 lbs/sf)
VersiTrim One	Edge (Ballast)	-	RE-2 (200 lbs/sf)
VersiTrim One	Coping	-	RE-3 (160 lbs/sf)

Shop Fabricated Metal

One of the leading causes of wind related disturbances is improperly designed, manufactured or installed metal fascia systems. All too frequently, shop fabricated metal accessories do not meet industry recognized standards.

Countless studies, many initiated by hurricanes, have pointed to metal edge components as a major contributor to roof failures. These components are vulnerable since the building edge is first hit, with winds and uplift pressures are always greatest at perimeters and especially roof corners.

When metal edging or coping is to be installed (particularly when shop fabricated), it is strongly advised that the design conforms with the Factory Mutual recommendations identified in Loss Prevention Data Bulletin 1-49 and with SMACNA (Sheet Metal and Air Conditioning National Association) specifications. To ensure such compliance, specify FM 1-90 approved metal edge systems and request certification from the manufacturer.

Guide for Sheet Metal Fascia Edges

(Reprinted from the NRCA Roofing Manual: Architectural Metal Flashing, Condensation and Air Leakage Control, and Reroofing - 2014)

Recommended Minimum Gauges for Fascia and Cleat[1]				
Exposed Face Without Brakes "A" Dimension	Aluminum Alloy (3003-H14)	Galvanized or Coated (G60 & G90) Steel	Stainless Steel (302 & 304)	Cleat[2]
Up to 3" Face	.032"	24 ga.	26 ga.	Same gauge as fascia metal
3" to 6" Face	.040"	24 ga.	24 ga.	One gauge heavier than fascia metal
6" to 8" Face	.040"	24 ga.	24 ga.	One gauge heavier than fascia metal
8" to 10" Face	.050"	22 ga.	22 ga.	One gauge heavier than fascia metal
More than 10" Face	Add brakes to stiffen or use two-piece face	Add brakes to stiffen or use two-piece face	Add brakes to stiffen or use two-piece face	One gauge heavier than fascia metal

Recommended Profiles and Fastening for Fascia and Cleat[1]

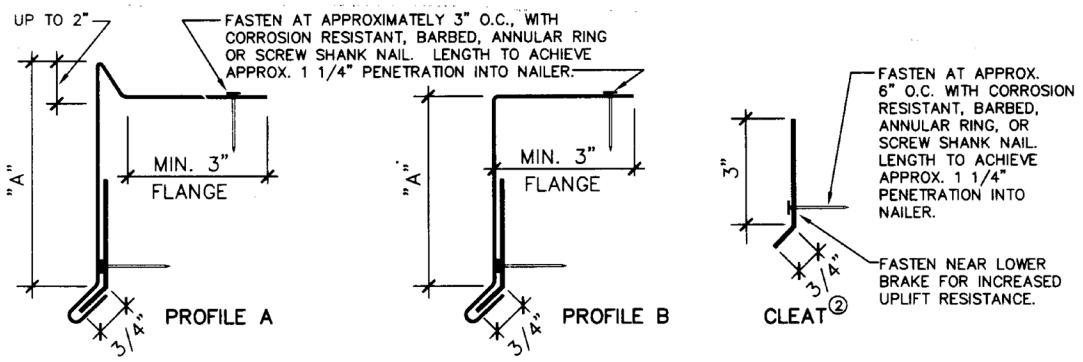

Notes:

1. Consideration must be given to wind zone and local conditions in regard to the selection of metal gauge, profile, and fastening schedule. Severe conditions or code and regulatory bodies may require more conservative designs. When using the above table, additional items should be considered, such as fastening pattern.

2. All cleats shall be continuous with lengths not to exceed 12 feet. Allow a 1/4" gap between pieces. Joints in cleat should not coincide with joints in fascia metal.

3. The securement of perimeter wood nailers, play an equally important role in the overall performance of metal fascias systems. Design Criteria for the attachment of wood nailers and associated metal edge components are also identified in the FM 1-49 Bulletin.

Why Specify Pre-Manufactured Roof Edges?
Top 10 Reasons

Listed below are the top 10 reasons to specify Pre-Manufactured Metal Edge Systems versus Shop Fabricated Metal:

Pre-Manufactured	Shop Fabricated
Known high quality that is consistent each time and available nationwide	Unknown, possibly poor quality, that will vary by contractor and location
Snap-on details with no exposed fasteners for a clean look without leaks	Exposed fasteners that can rust, leak, and prohibit required thermal movement
Pre-punched slotted fastener holes to assure proper fastener location and to allow for thermal movement	Fasteners driven through the roof edge in the field may be spaced improperly and do not allow for thermal movement as required
Concealed internal splice plates for smooth, maintenance free joints	Frequently use exterior “band aid” splices that are unsightly and require maintenance
Factory fabricated and finished miters, end caps, and accessories provide clean, professional appearance	Miters, end caps, and accessories are field fabricated; often yielding a cobbled together appearance
Radius sections are welded to fit the project’s actual conditions providing a smooth, finished look	Segmented straight lengths, or riveted or seamed radius, give a rough, unprofessional appearance
ANSI/SPRI ES-1 tested for wind resistance per International Construction Code as is now required in many States	No testing and may not meet local building codes
Independently tested and granted a FM approval rating by the Factory Mutual Insurance Company	No testing or FM approval
Included as part of the Roofing System Warranty with coverage up to 30 years and peak gust wind speed coverage up to 120 mph	Little or no warranty protection provided by companies with varying, unknown levels of experience
Factory finishes that incorporate Kynar 500 or Hylar 5000 baked-on architectural paint to provide a finish that is warranted for up to 20 years	Field painted edge metal is often not properly prepared to assure good paint adhesion; also, many paints will not hold up to extreme UV exposure which can result in fading and chalking over time

Copyright 2024 Versico

Versico and VersiTrim are Trademarks of Versico

Kynar is a Trademark of Arkema Inc.

This specification represents the applicable information available at the time of its publication. Owners, specifiers and Versico authorized roofing contractors should consult Versico or their Versico Independent Sales Representative for any information, which has subsequently been made available.

Review the appropriate Versico warranty for specific warranty coverage, terms, conditions and limitations.