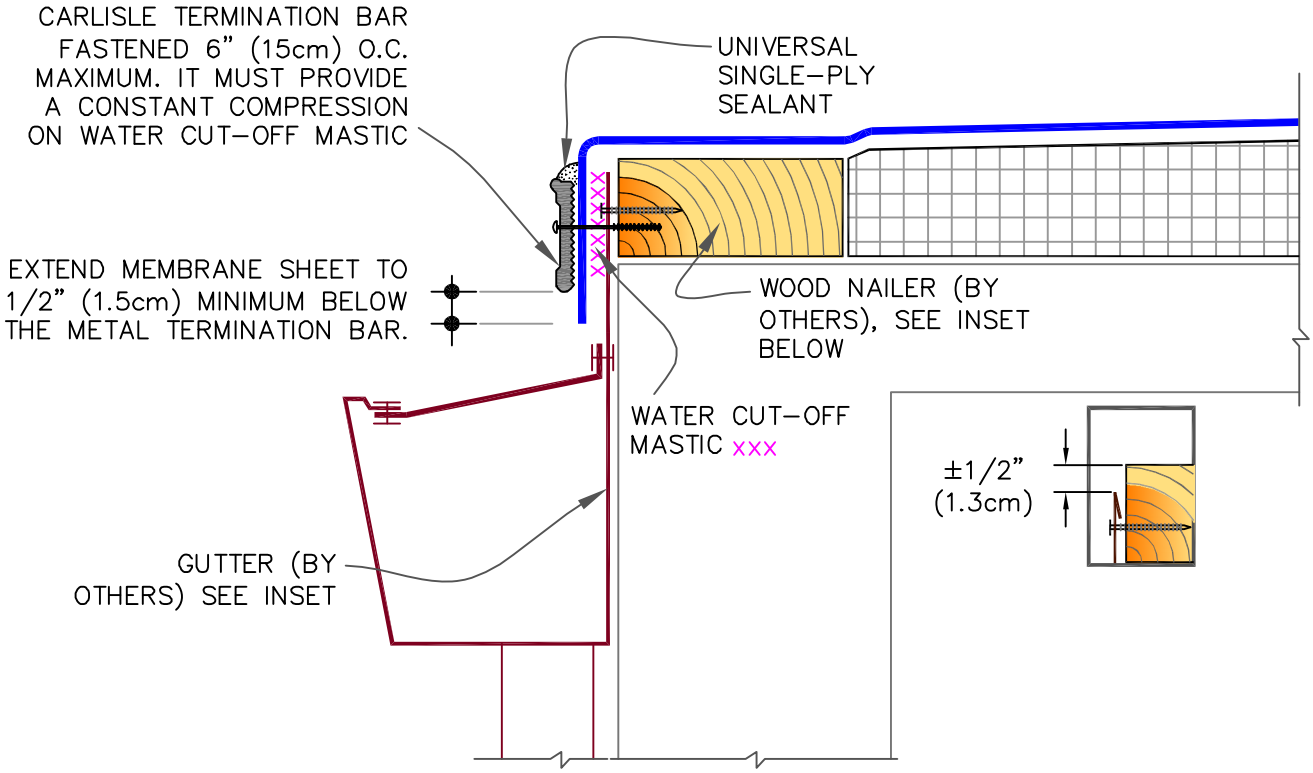

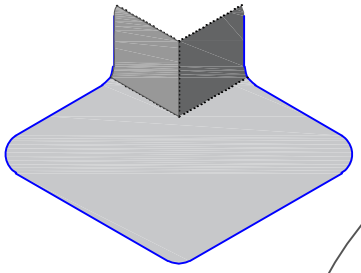

60-MIL (1.52mm) THICK TPO, UNIVERSAL CORNER CAN BE USED FOR AT TOP CORNER. CUT AS SHOWN IN DETAIL U-15G

DESIGNER MAY USE CARLISLE SECUREDGE TERMINATION BAR WITH FASCIA COVER ALSO

COLORED COVER

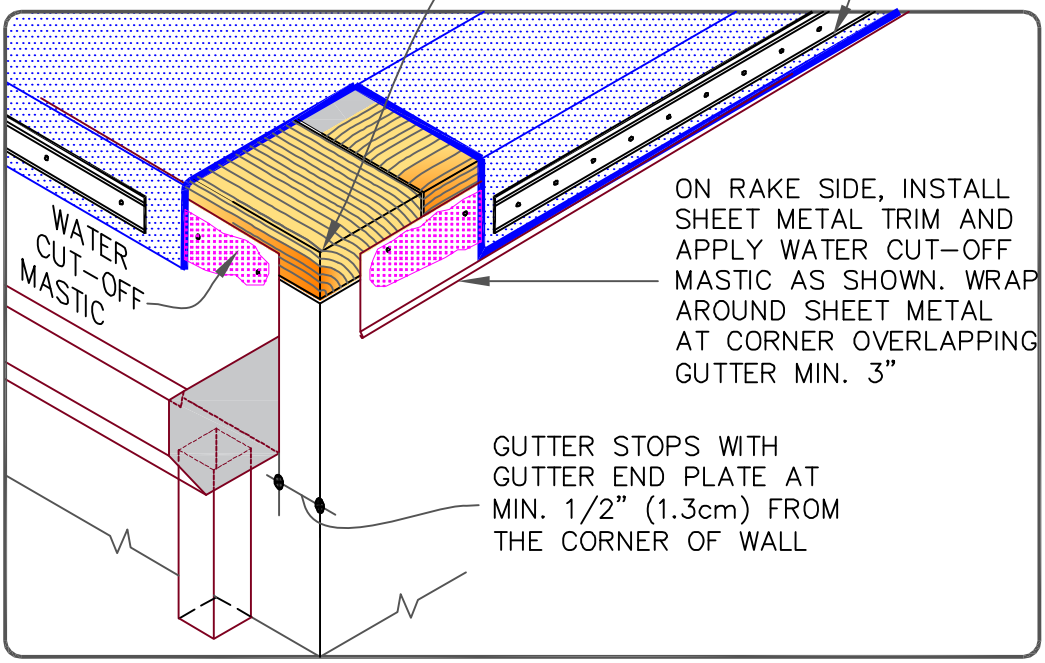

CARLISLE SYNTEC SYSTEMS	METAL BAR EDGE TERMINATION	TP	DETAIL NO. U-1C
	MAXIMUM WARRANTY: 30 YEARS		

© 2025 CARLISLE SynTec a division of CARLISLE Construction Materials Incorporated